Jan. 2, 1951 R. G. SCHAAF, JR 2,536,517

WASHING MACHINE HAVING AIR AGITATION

Filed Nov. 15, 1946

Fig. 1

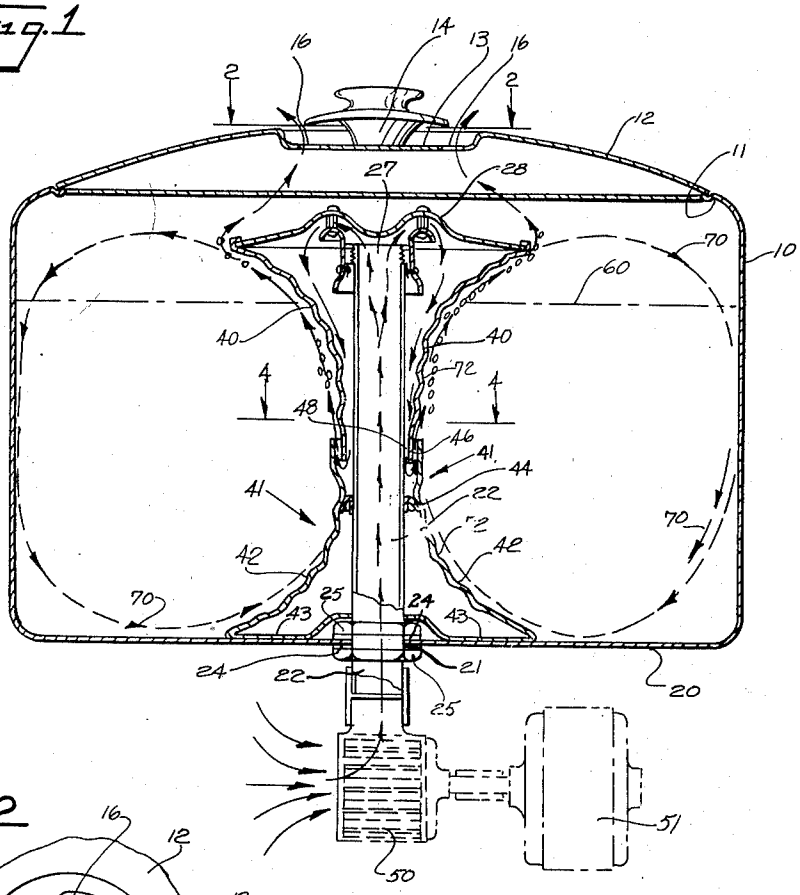

Fig. 2

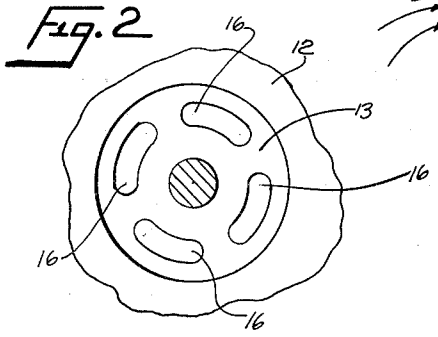

Fig. 3

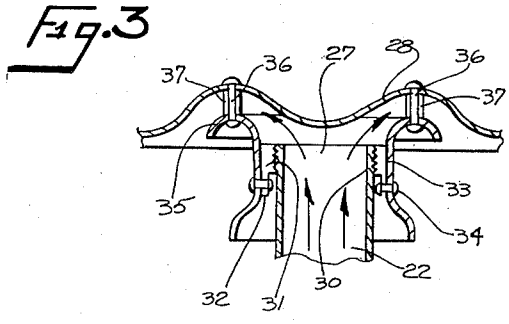

Fig. 4

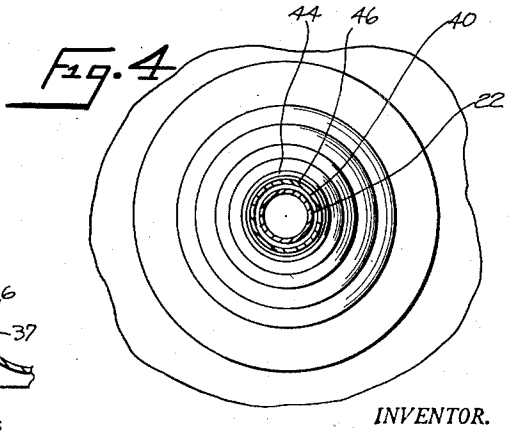

INVENTOR.
RUDOLPH G. SCHAAF JR.

BY

Ostrolenk and Faber

ATTORNEYS

Patented Jan. 2, 1951

2,536,517

UNITED STATES PATENT OFFICE

2,536,517

WASHING MACHINE HAVING AIR AGITATION

Rudolph G. Schaaf, Jr., Monmouth Beach, N. J.

Application November 15, 1946, Serial No. 710,016

9 Claims. (Cl. 68—183)

1

My present invention relates to washing machines and more particularly to a novel means for agitating the clothes in the washing machine by utilizing a stream of air, guided through the water in a manner to cause a regular turbulent circulation of the wash water through the wash in the washing machine.

Heretofore, in the construction and operation of washing machines, it has been customary to provide an oscillatory paddle which moved back and forth in the wash water and caused the clothing to be drawn through the water: or to utilize rotary elements with sufficient obstructions or bumps so that as the elements rotated, the clothes would move with respect to the wash water.

All of these means have required complex mechanical apparatus in the body of the washing machine itself and were thus subject to the difficulty that these complex elements must operate in water.

This raised not only problems of corrosion and deterioration in mechanical elements, but also presented a series of problems of gasketing or otherwise sealing of the washing machine elements to avoid leakage of wash water through bushings or other openings.

My invention requires no mechanical or moving parts within the washing machine body itself. As a matter of fact, the only moving element required for my washing machine is a fan for blowing the stream of air into the machine and a suitable motor for operating the fan.

Essentially, my invention contemplates the construction of a washing machine wherein a stream of air is introduced into the wash water in such a direction as to cause continuous and constant circulation of the clothes in the water.

Heretofore, there have been attempts to introduce a circulatory air system in the wash water, but these have been subject to the disability that the air was either introduced from the top and thus interfered with, or made more complex, the opening and closing of the machine, or the air was introduced at such a portion of the washing machine body and the washing machine body was so shaped that continuous and constant circulation of the wash with respect to the wash water was not obtained.

It is necessary, in the efficient operation of washing machines, that the wash be swished through the water or vice versa and that there actually be a flow of water through the interstices of the clothing which is to be washed. For this reason, there must be relative movement between the wash and the water, and if the wash

2

and water are circulating at the same speed, there is no such relative movement as will produce a good washing action.

Consequently, the introduction of the air must be in such a manner as will not inconvenience the user or make the user's job more difficult either in loading or unloading the machine, but must also be in such a manner as to cause constant movement of the wash through the water.

From the point of view of convenience by the user, my invention contemplates leading the air into the washing machine from the center of the bottom of the machine and then leading the air up adjacent to the top of the machine by a tube. A guide then turns the air flow down once more within an outer tube surrounding the central tube and the air is caused to exit at about the middle of the height of the washing machine at the center of the vat.

The outer tube or air guide has a generally concave surface, which surface is also corrugated, so that the air that has entered the washing machine body is guided outwardly in its upward movement through the water by the concave surface, and the clothes, which are moved by air and water, circulate into contact with the corrugated, concave outer tube and are thus rubbed against the wash board arrangement produced by the corrugations. In addition to being thus rubbed and tumbled by the corrugations, the wash is also slowed down so that the water may move with respect thereto.

By this means, a continuous rotary circulation of the water is obtained in each vertical cross-section of the washing machine with the circulation starting at the air inlet at substantially the center of the machine, moving upward and outward from the center to the top, and thereby consequently producing a downward movement at the outer periphery of the tub, and an inward movement at the bottom of the machine.

The primary object, therefore, of my invention is the provision of a washing machine so arranged that circulation of the water with respect to the clothes in the machine is obtained without any movement of parts in the body of the machine.

Another and corollary object of my invention is the provision of means for circulating water with respect to the wash in a washing machine by means of a directed air flow.

Another object of my invention is the provision of a washing machine in which circulation is obtained solely by air power wherein the air

flow apparatus does not interfere in any way with the loading or unloading of the machine.

Another object of my invention is the provision of a novel washing machine in which all apparatus within the tank of the washing machine is stationary.

The foregoing and many other objects of my invention will become apparent in the following description and drawings, in which:

Figure 1 is a vertical cross-sectional view through my novel washing machine.

Figure 2 is a horizontal view partly in cross-section taken on line 2—2 of Figure 1, looking in the direction of the arrows.

Figure 3 is a vertical cross-sectional enlargement of a portion of Figure 1.

Figure 4 is a cross-sectional view taken on line 4—4 of Figure 1 looking in the direction of the arrows.

Referring now to the figures, my novel washing machine comprises a stationary tank 10, having an open top 11 which is closed by the cover 12. The top central portion of the cover 12 is provided with a recess 13 in the center of which is secured the handle 14 by means of which the cover may be placed and removed.

The handle 14 does not, as shown in Figure 1, completely fill the recess. The portion of the recess adjacent and somewhat below the overhang of the handle 14 is provided with a plurality of openings 16 to permit the air which is introduced into the washing machine body, for operative purposes as hereinafter described, to escape finally through the top of the machine without disturbing the cover.

The bottom wall 20 of the tank is provided with an opening 21 through which is led the air intake pipe 22. The opening 21 through which pipe 22 passes, is appropriately sealed to avoid any leakage, in any suitable manner, as for instance by the gaskets 24, held in place by nuts 25 threaded on the outside of the tube 22.

Tube 22 is open at the upper end 27. Top guide plate 28 is secured over the open end of tube 22 in such a manner as to permit an air flow out of the open end 27 of tube 22 while nevertheless the guide plate 28 is supported by tube 22. This is accomplished by threading the upper end of tube 22 at 30 and placing a supporting nut 31 over the threads 30 as shown in Figure 3, the nut 31 being provided with the dependent angular flange 32.

An annular support 33 is secured to flange 32 of nut 31 in any suitable manner, as by a plurality of rivets 34, as shown. The annular support 33 is bent over to form the supporting annular flange 35. Plate 28 is secured to supporting annular flange 35 above the opening 27 of tube 22 by a plurality of rivets 36, 36.

Appropriate spacing by the plate 28 and the supporting flange 35 is obtained by properly dimensioned bushings 37, 37 on rivets 36. Thus, air may flow readily, as shown by the arrows in Figures 1 and 3, out through top 27 of tube 22 and then is guided by guide plate 28 through the annular passage between plate 28 and the supporting flange 35. The upper portion 40 of outer guide 41 is secured in any suitable manner to assure an air seal along the outer periphery of guide plate 28. The lower portion 42 of guide 41 is secured at 43 to the bottom 20 of tank 10, and is also braced by the annular securement flange 44 against the tube 22.

The lower portion 42 of guide 41 is extended up to telescope with respect to upper portion 40. This telescoping arrangement produces the upwardly directed annular passage 46. Air, which is blown by fan 50, operated by motor 51, up through the tube 22, is thus directed by guide plate 28 downwardly within the guide member 40.

The air, under pressure, now flows out through annular opening 48 at the bottom of guide 40 and then flows up through passage 46 into the tank. The air must be of at least sufficient pressure to overcome the pressure of the head of water between upper water level 60 and the lower end of passage 48. With the air at such pressure or higher, then there is sufficient force to force air out through the lower end of passage 48; the air will then rise through the annular passage 46 and up through the water in the tank.

The air bubbles, rising from passage 46 from about the center of the tank, are guided outwardly by the concavity of the guide element 40, which converts the buoyant vertical lift of the air flow into a horizontal radially outward motion necessary to facilitate circulatory motion of the load of wash. This circulatory motion is enhanced by the concavity of the lower guide section 42.

Thus, by air means alone and no moving parts within the tank, the water is forced to circulate with the clothing in the direction indicated by the arrows 70, the clothing being slowed down by corrugations 72. The guide sections 40 and 42 of the guide 41 not only serve to ensure a circulatory motion of the water, but the corrugations 72. 72 on these guides provide a wash-board effect wherein the wash, which may tend to acquire the movement of the water, is slowed down so that the water may circulate through the interstices of the wash and clean the same. This is in addition to the wash-board or rubbing and flexing effect obtained.

By the foregoing means, therefore, I have avoided all moving parts within my washing machine body. No complex oscillatory movements are required, as all moving mechanical parts within the washing machine body are avoided. The only moving part needed at all is a fan or other compressor outside the tub and a motor for operating it.

The air intake and exhaust do not interfere in any way with handling, loading or unloading the machine. The circulatory action is obtained not by continuous and vigorous spanking by paddles which may cause damage and excessive wear to the clothes, and may even knot the clothes up, but by gentle air bubbles which may be at sufficient pressure to cause appropriate circulation of the water with respect to the wash.

While I have described my invention with respect to washing machines, it will obvious that it is adapted to other types of apparatus such as dry cleaning machines, dyeing apparatus and other types of machines where circulation of a fluid with respect to cloth or other solid or woven material is desired.

In the foregoing, I have described my invention solely in connection with an illustrative embodiment thereof. Since many variations and modifications of my invention will now be obvious to those skilled in the art, I prefer to be bound, not by the specific disclosures herein contained, but only by the appended claims.

I claim:

1. A washing machine comprising a vat for containing laundry to be washed and wash water; means for introducing air into said vat at a point below the upper level of the water; said means comprising a substantially vertical tube

located at substantially the center of said vat; the upper end of said tube being open and the lower end communicating through the bottom of the vat with a source of air under pressure; a substantially concentric tube surrounding the first vertical tube; the lower end of said concentric tube being open and located below the level of the water; the upper end thereof being closed and spaced above the upper end of the first mentioned vertical tube; said concentric tube comprising means for guiding the air as it rises after introduction thereof into the water to produce a circulatory motion of the water.

2. A washing machine comprising a vat for containing laundry to be washed and wash water; means for introducing air into said vat at a point below the upper level of the water; said means comprising a substantially vertical tube located at substantially the center of said vat; the upper end of said tube being open and the lower end communicating through the bottom of the vat with a source of air under pressure; a substantially concentric tube surrounding the first vertical tube; the lower end of said concentric tube being open and located below the level of the water; the upper end thereof being closed and spaced above the upper end of the first mentioned vertical tube; means for guiding the air as it rises after introduction thereof into the water to produce a circulatory motion of the water; said last mentioned means comprising the formation of said concentric tube so that its lower diameter is relatively small and its upper diameter relatively large and so that the sides of the tube are concave.

3. A washing machine comprising a vat for containing laundry to be washed and wash water; means for introducing air into said vat at a point below the upper level of the water; said means comprising a substantially vertical tube located at substantially the center of said vat; the upper end of said tube being open and the lower end communicating through the bottom of the vat with the source of air under pressure; a substantially concentric tube surrounding the first vertical tube; the lower end of said concentric tube being open and located below the level of the water; the upper end thereof being closed and spaced above the upper end of the first mentioned vertical tube; means for guiding the air as it rises after introduction thereof into the water to produce a circulatory motion of the water; said last mentioned means comprising the formation of said concentric tube so that its lower diameter is relatively small and its upper diameter relatively large and so that the sides of the tube are concave; and an additional guide surrounding said vertical tube at the lower end thereof comprising an additional concentric member of relatively large diameter at the bottom of the vat and substantially small diameter at the point of exit of air from the first concentric tube, the sides of said additional guide being concave.

4. A washing machine comprising a vat for containing laundry to be washed and wash water; means for introducing air into said vat at a point below the upper level of the water; said means comprising a substantially vertical tube located at substantially the center of said vat; the upper end of said tube being open and the lower end communicating through the bottom of the vat with the source of air under pressure; a substantially concentric tube surrounding the first vertical tube; the lower end of said concentric

tube being open and located below the level of the water; the upper end thereof being closed and spaced above the upper end of the first mentioned vertical tube; means for guiding the air as it rises after introduction thereof into the water to produce a circulatory motion of the water; said last mentioned means comprising the formation of said concentric tube so that its lower diameter is relatively small and its upper diameter relatively large and so that the sides of the tube are concave; an additional guide surrounding said vertical tube at the lower end thereof comprising an additional concentric member of relatively large diameter at the bottom of the vat and substantially small diameter at the point of exit of air from the first concentric tube, the sides of said additional guide being concave; said last mentioned guide extending above and outside of the lower end of said first concentric tube and being spaced therefrom to form an upwardly directed air exit passage.

5. A washing machine comprising a vat for containing laundry to be washed and wash water; means for introducing air into said vat at a point below the upper level of the water; said means comprising a substantially vertical tube located at substantially the center of said vat; the upper end of said tube being open and the lower end communicating through the bottom of the vat with the source of air under pressure; a substantially concentric tube surrounding the first vertical tube; the lower end of said concentric tube being open and located below the level of the water; the upper end thereof being closed and spaced above the upper end of the first mentioned vertical tube; means for guiding the air as it rises after introduction thereof into the water to produce a circulatory motion of the water; said last mentioned means comprising the formation of said concentric tube so that its lower diameter is relatively small and its upper diameter relatively large and so that the sides of the tube are concave; and an additional guide surrounding said vertical tube at the lower end thereof comprising an additional concentric member of relatively large diameter at the bottom of the vat and substantially small diameter at the point of exit of air from the first concentric tube, the sides of said additional guide being concave; said first mentioned concentric tube and said additional guide having undulating outer surfaces.

6. A washing machine comprising a vat for containing laundry to be washed and wash water; means for introducing air into said vat at a point below the upper level of the water; said means comprising a substantially vertical tube located at substantially the center of said vat; the upper end of said tube being open and the lower end communicating through the bottom of the vat with the source of air under pressure; a substantially concentric tube surrounding the first vertical tube; the lower end of said concentric tube being open and located below the level of the water; the upper end thereof being closed and spaced above the upper end of the first mentioned vertical tube; means for guiding the air as it rises after introduction thereof into the water to produce a circulatory motion of the water; said last mentioned means comprising the formation of said concentric tube so that its lower diameter is relatively small and its upper diameter relatively large and so that the sides of the tube are concave; and additional guide surrounding said vertical tube at the lower end thereof

comprising an additional concentric member of relatively large diameter at the bottom of the vat and substantially small diameter at the point of exit of air from the first concentric tube, the sides of said additional guide being concave; said first mentioned concentric tube and said additional guide having corrugated surfaces.

7. A washing machine comprising a vat for containing laundry to be washed and wash water; means for introducing air into said vat at a point below the upper level of the water; said means comprising a substantially vertical tube located at substantially the center of said vat; the upper end of said tube being open and the lower end communicating through the bottom of the vat with a source of air under pressure; a substantially concentric tube surrounding the first vertical tube; the lower end of said concentric tube being open and located below the level of the water; the upper end thereof being closed and spaced above the upper end of the first mentioned vertical tube; said concentric tube comprising means for guiding the air as it rises after introduction thereof into the water to produce a circulatory motion of the water; said concentric tube including concave elements in said vat concentric with said vertical tube; said concave elements extending outwardly on a curve at the top and bottom of said vat.

8. A washing machine comprising a vat for containing laundry to be washed and wash water; means for introducing air into said vat at a point below the upper level of the water; said means comprising a substantially vertical tube located at substantially the center of said vat; the upper end of said tube being open and the lower end communicating through the bottom of the vat with a source of air under pressure; a substantially concentric tube surrounding the first vertical tube; the lower end of said concentric tube being open and located below the level of the water; the upper end thereof being closed and spaced above the upper end of the first mentioned vertical tube; said concentric tube comprising means for guiding the air as it rises after introduction thereof into the water to produce a circulatory motion of the water; said concentric tube including concave elements in said vat concentric with said vertical tube; said concave elements extending outwardly on a curve at the top and bottom of said vat; the surfaces of said guide means being transversely undulated.

9. A washing machine comprising a vat for containing laundry to be washed and wash water; means for introducing air into said vat at a point below the upper level of the water; said means comprising a substantially vertical tube located at substantially the center of said vat; the upper end of said tube being open and the lower end communicating through the bottom of the vat with a source of air under pressure; a substantially concentric tube surrounding the first vertical tube; the lower end of said concentric tube being open and located below the level of the water; the upper end thereof being closed and spaced above the upper end of the first mentioned vertical tube; said concentric tube comprising means for guiding the air as it rises after introduction thereof into the water to produce a circulatory motion of the water; said concentric tube including concave elements in said vat concentric with said vertical tube; said concave elements extending outwardly on a curve at the top and bottom of said vat; the surfaces of said guide means being corrugated with substantially horizontal flutes.

RUDOLPH G. SCHAAF, JR.

REFERENCES CITED

The following references are of record in the file of this patent:

UNITED STATES PATENTS

Number	Name	Date
Re. 17,945	Burke	Feb. 3, 1931
160,178	Gething	Feb. 23, 1875
780,133	Schirmer	Jan. 17, 1905
1,599,749	Emerson	Sept. 14, 1926
1,715,282	Dunham	May 28, 1929
1,809,177	Miner	June 9, 1931
1,898,676	Magnus	Feb. 21, 1933
1,986,019	Shaffner	Jan. 1, 1935
2,051,441	Ellis	Aug. 18, 1936
2,058,604	Lamb	Oct. 27, 1936
2,148,646	Rocke	Feb. 28, 1939
2,176,220	Marshall	Oct. 17, 1939