US 20060266810A1

(19) **United States**

(12) **Patent Application Publication** (10) **Pub. No.: US 2006/0266810 A1**

Foushee (43) **Pub. Date: Nov. 30, 2006**

(54) **LOCKING CONTAINER**

(75) Inventor: **Fred Foushee**, Suwanee, GA (US)

Correspondence Address:
JOHN S. PRATT, ESQ
KILPATRICK STOCKTON, LLP
1100 PEACHTREE STREET
ATLANTA, GA 30309 (US)

(73) Assignee: **Rock-Tenn Shared Services, LLC**

(21) Appl. No.: **11/138,798**

(22) Filed: **May 26, 2005**

Publication Classification

(51) **Int. Cl.**
B65D 5/54 (2006.01)
B65D 5/56 (2006.01)

(52) **U.S. Cl.** **229/101.2**; 229/117.35; 229/149

(57) **ABSTRACT**

There is provided a re-closable container that can be reduced in size once a predetermined amount has been removed from the container. Containers according to certain embodiments provide a utility flap that can be used to secure a bag in place, to help prevent moisture from affecting the contents of the container, and to help provide a secure closure for the container.

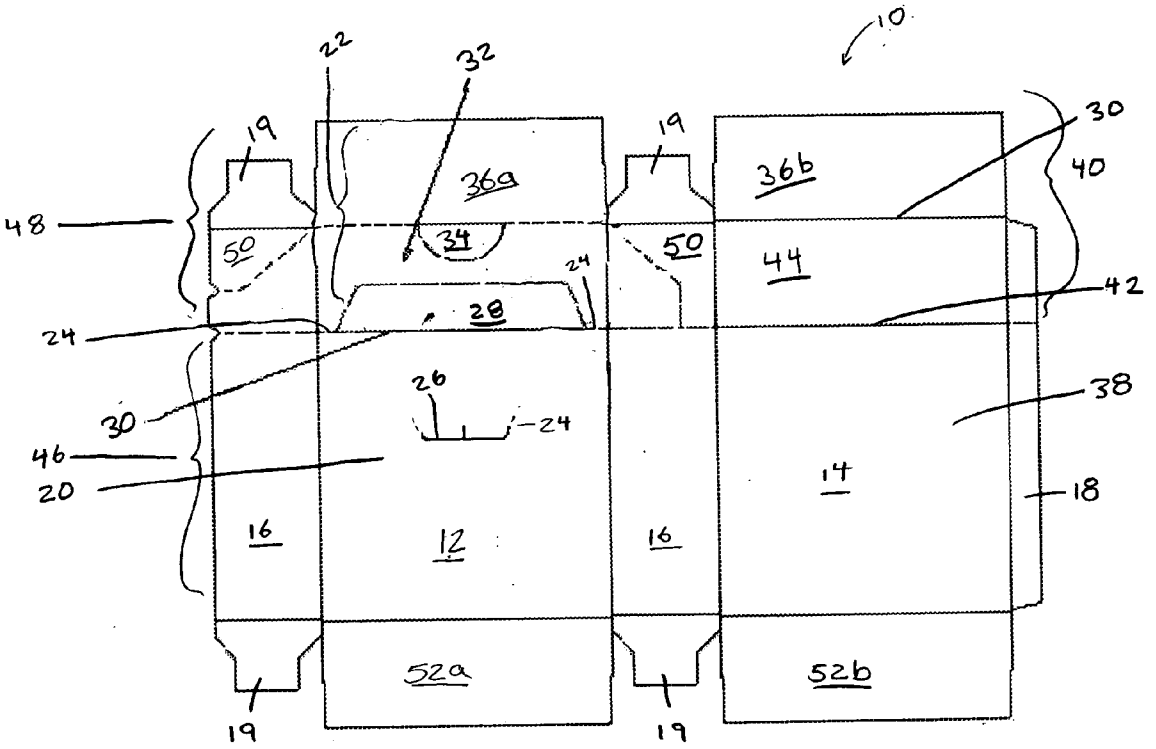

Figure 1

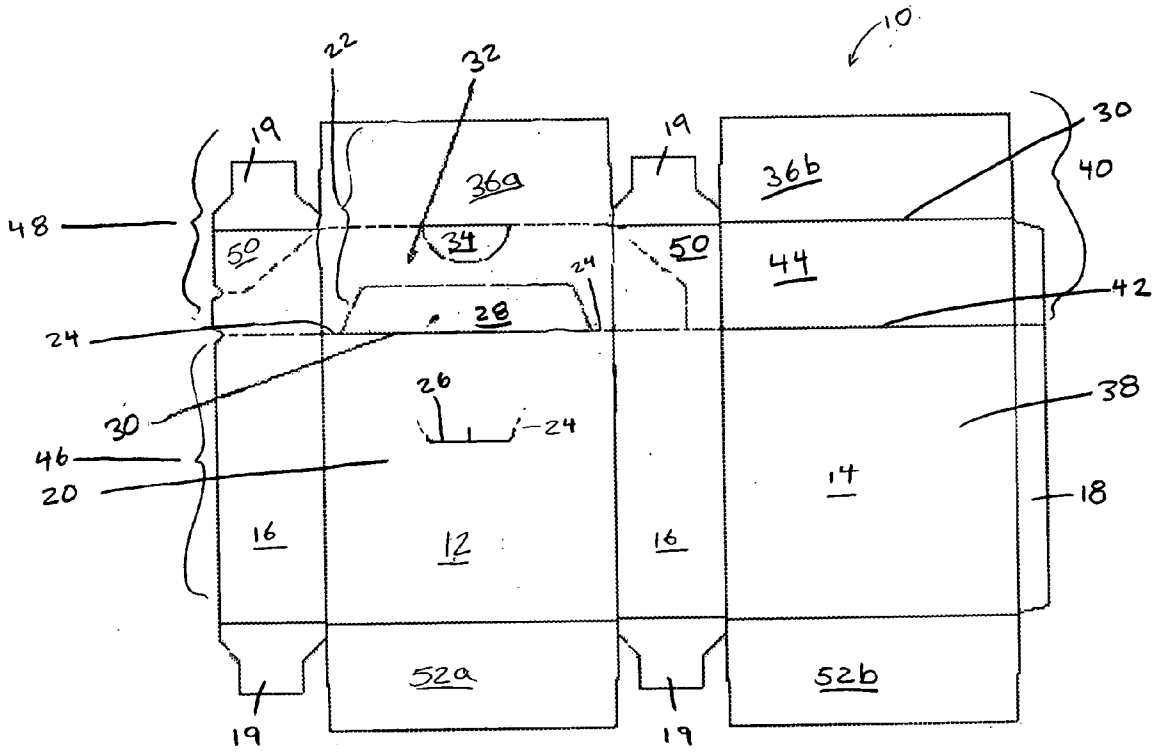
10
22
32
19
19
30
36a
36b
40
48
50
34
50
44
24
42
24
28
30
26
24
38
46
20
14
18
16
12
16
52a
52b
19
19

Figure 2

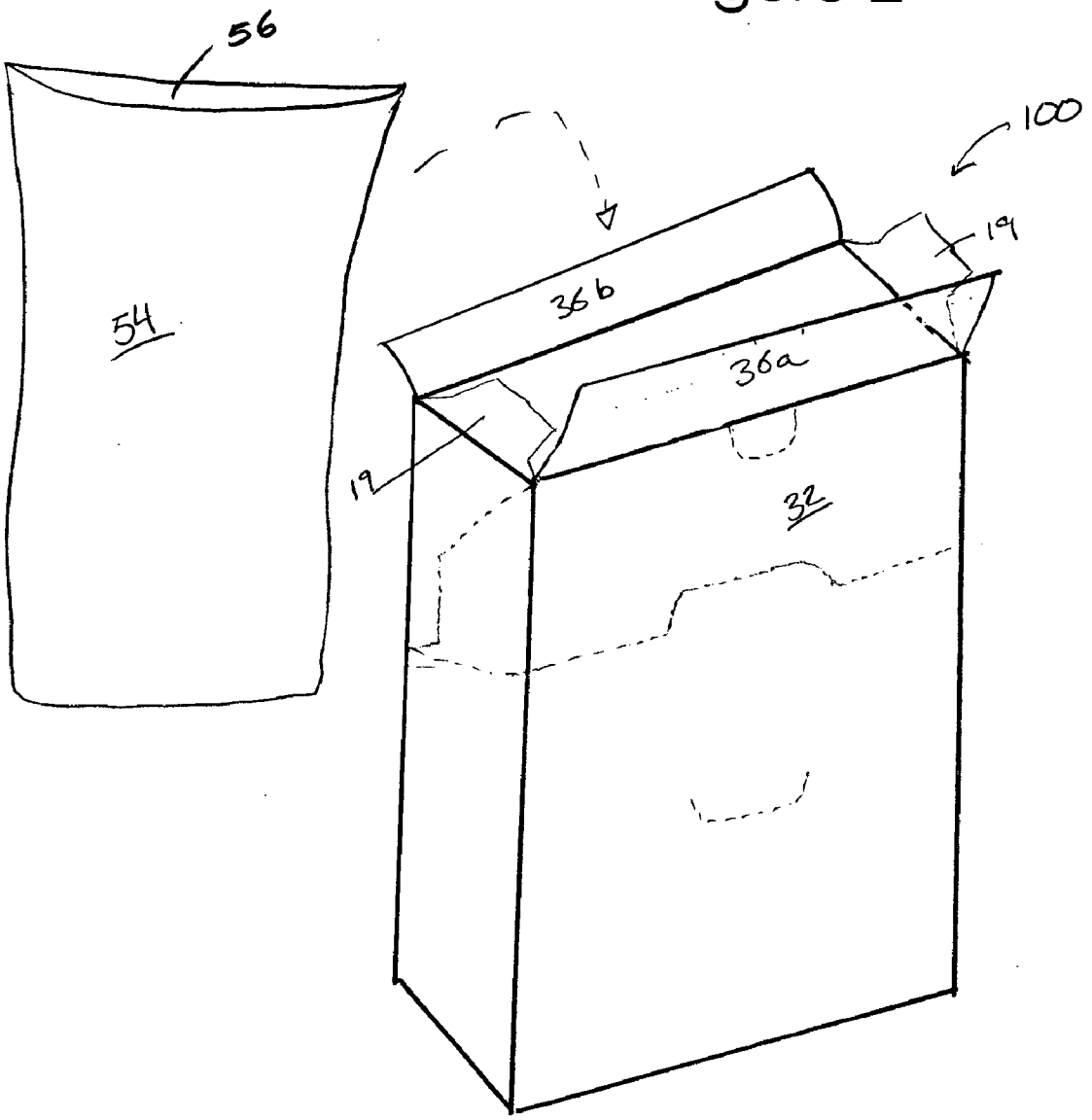

Figure 3

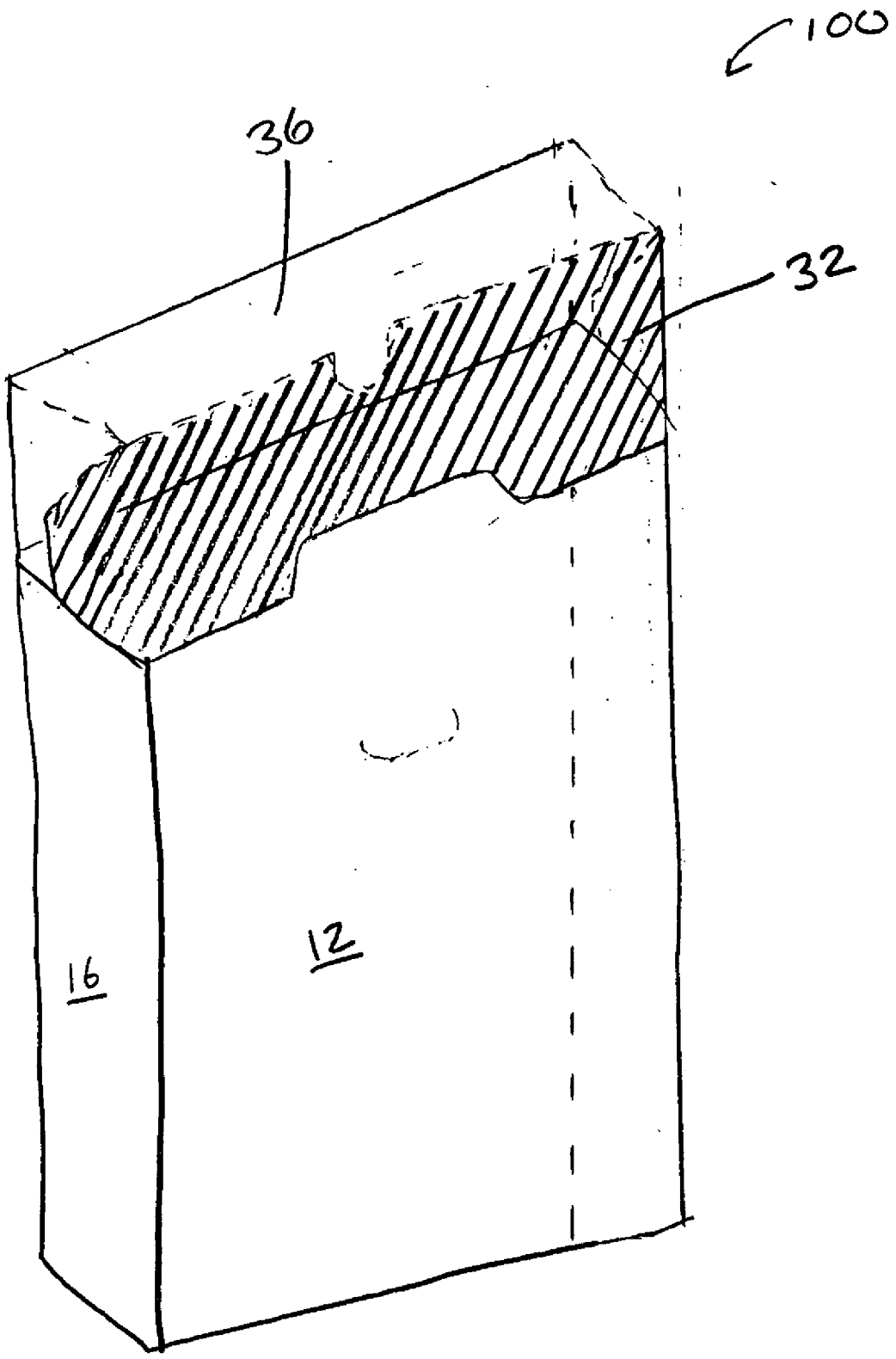

Figure 4

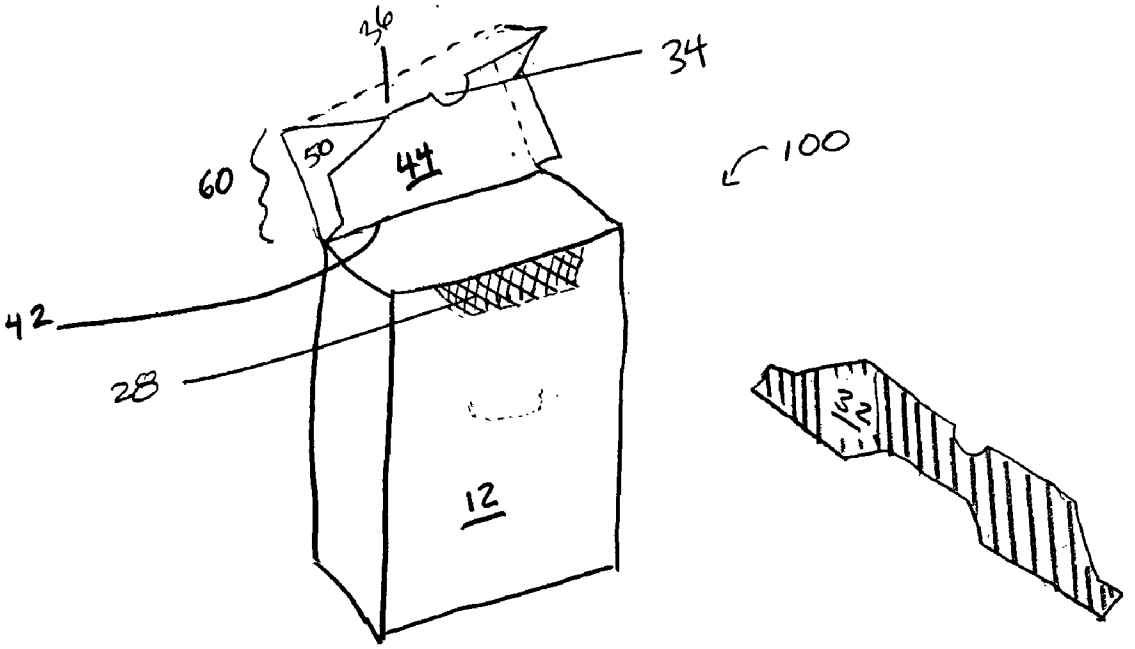

Figure 5

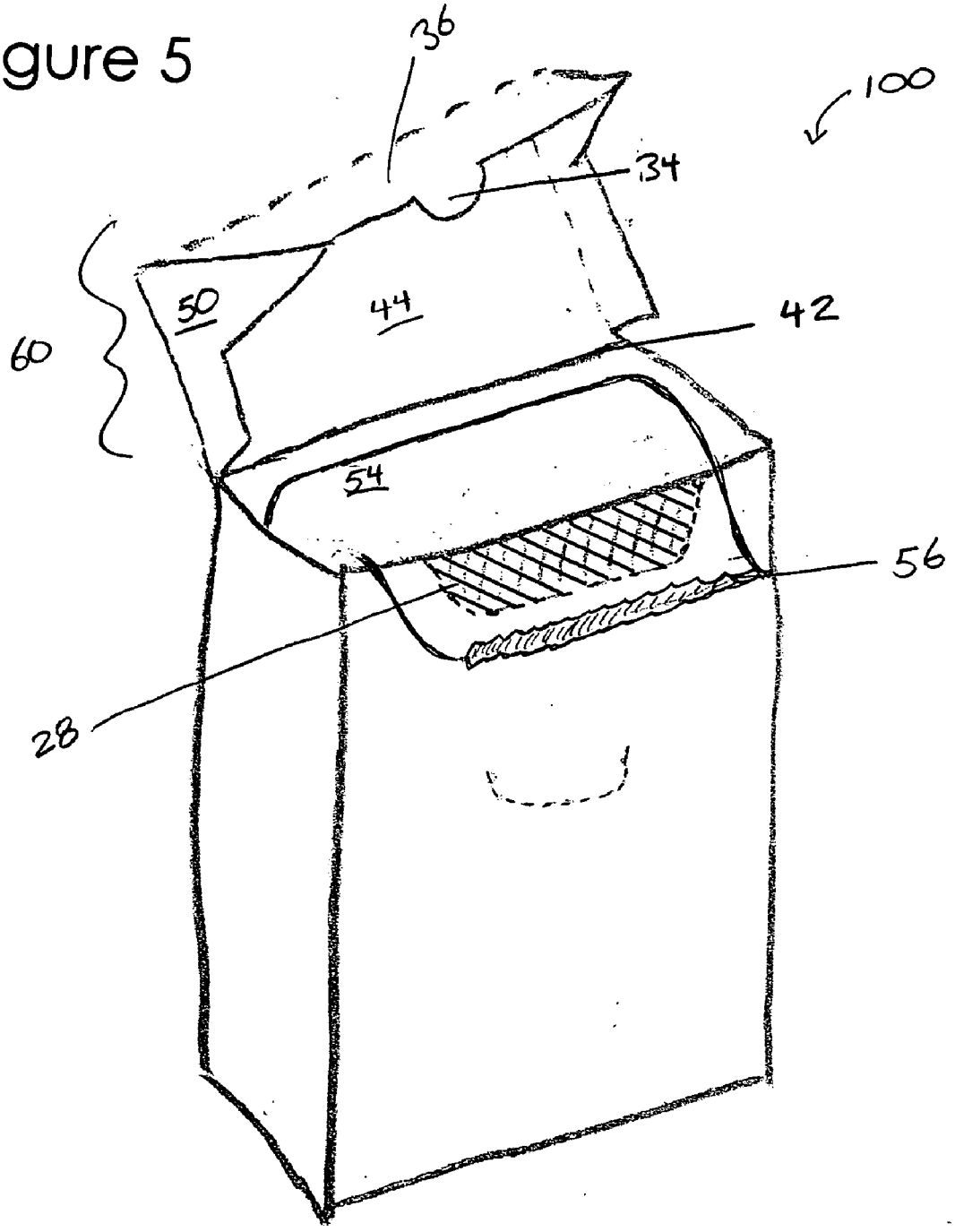

Figure 6

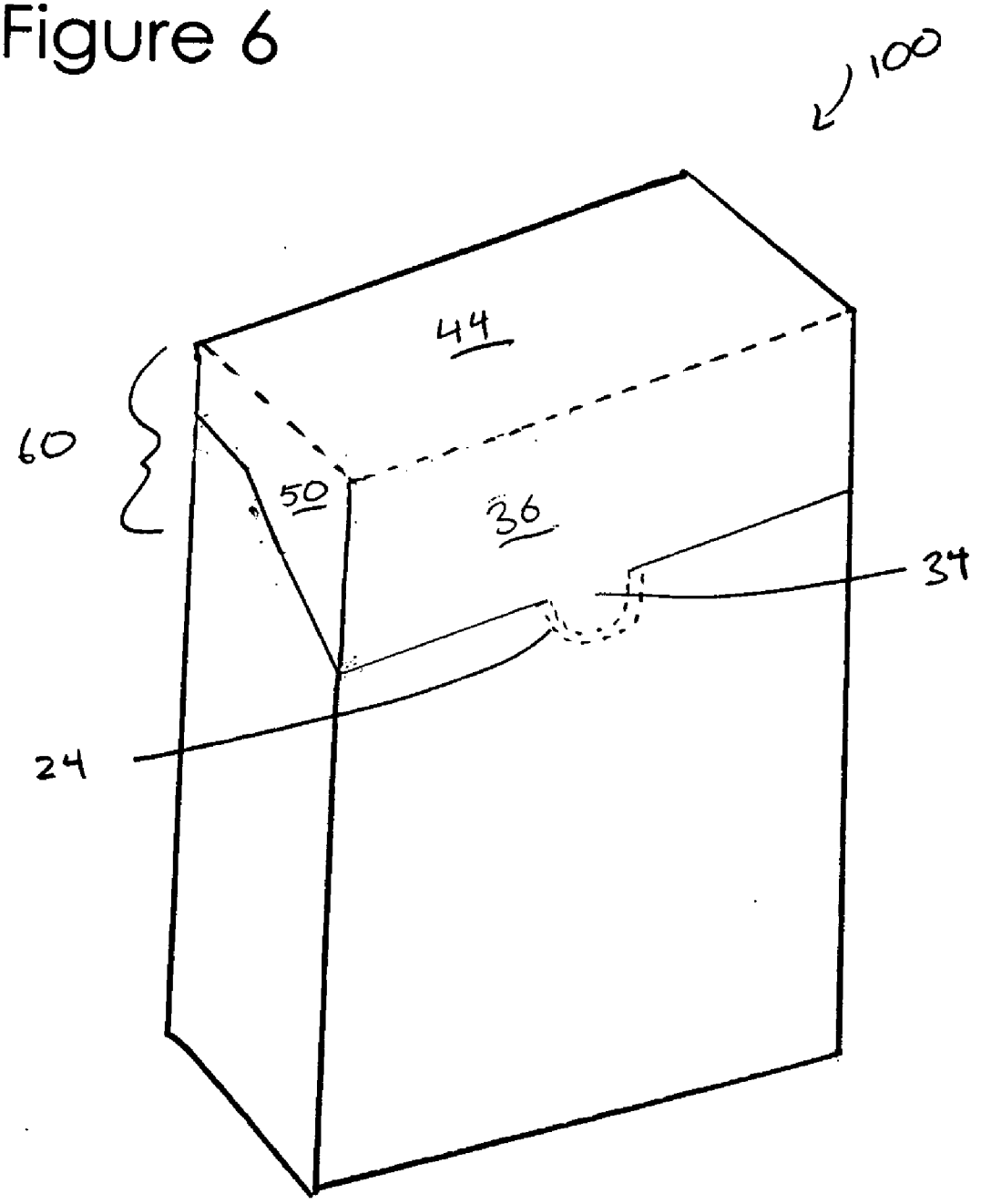

LOCKING CONTAINER

FIELD OF THE INVENTION

[0001] Certain embodiments of the present invention relate to reducible and reclosable locking containers for keeping bagged items fresh and/or for preventing items contained within the container from spilling out.

BACKGROUND

[0002] In many instances, products are packaged in quantities that are greater than a single serving or use, such that the product container is not completely emptied after being opened. It is desirable for the consumer to be able to efficiently store the product for later use, and in the case of food products, prevent the unused portion from becoming stale or otherwise undesirable.

[0003] For example, many food products currently on the market are provided in a sealed bag that is contained within a paperboard box. The typical box has a tab and slot configuration on its lid located at the top of the box for closing the box, but the configuration does not prevent the contents from becoming stale or spilling out. Consumers typically roll the inner bag down and "stuff" the bag inside the box. There is not a seal on the bag or any other way to prevent moisture from entering the bag and spoiling the food.

[0004] The tab and slot configuration is also not a sturdy locking mechanism because it does not secure the open bag in place or close the top of the bag. If the box were to tip over in the cupboard after being opened, its contents could easily spill out. This is the case whether the product is a food item such as cereal, crackers, or cookies, or a household item, such as laundry detergent or fertilizer.

[0005] Products are also packaged in boxes or containers that are large enough to hold the full amount of the item being packaged, but that end up being too large for the remaining product once a serving or two has been removed. Reduction in container size once a certain amount has been used would increase available storage space.

[0006] Accordingly, there is a need to provide a re-closable container that can be reduced in size once a predetermined amount has been removed from the container. Additionally, because existing packaging does not provide a way to secure an open bag within a box to keep the contents fresh or prevent them from spilling, there is a need to provide a container that allows for re-closing of the box and fastening of the bag to protect the remainder of the product.

SUMMARY

[0007] There is provided a re-closable container that can be reduced in size once a predetermined amount has been removed from the container. Containers according to certain embodiments provide a utility flap that can be used to secure a bag in place, to help prevent moisture from affecting the contents of the container, and to help provide a secure closure for the container.

BRIEF DESCRIPTION OF THE DRAWINGS

[0008] **FIG. 1** is a top plan view of a blank used to make a container according to certain embodiments of the invention.

[0009] **FIG. 2** is a front perspective view of a container according to certain embodiments of the invention during assembly and filling.

[0010] **FIG. 3** is a front perspective view of a container according to certain embodiments of the invention once assembled and prior to removal of the tear away strip.

[0011] **FIG. 4** is a front perspective view of a container according to certain embodiments of the invention once opened.

[0012] **FIG. 5** is a front perspective view of a container according to certain embodiments of the invention in the open position and during closure.

[0013] **FIG. 6** is a front perspective view of a container according to certain embodiments of the invention in the closed position.

DETAILED DESCRIPTION

[0014] **FIG. 1** shows a blank **10** according to certain embodiments of the invention, prior to being assembled. Blank **10** has a front wall panel **12**, a back wall panel **14**, and side wall panels **16**. It also includes a glue flap **18** that is preferably used to secure the box in its assembled box-shaped position. Although glue flap **18** is shown attached to back wall panel **14**, it can alternatively extend from any edge panel of blank **10**. Blank **10** also features a series of dust flaps **19** that are useful in preventing dust and other particles from entering the assembled container where the panels are joined.

[0015] Front wall panel **12**, back wall panel **14**, side wall panels **16**, glue flap **18**, and dust flaps **19** are attached to one another by lines of weakness that allow the panels to be folded relatively easily with respect to one another during assembly. For the purposes of this document, "line of weakness" means any area of weakness formed in blank **10** that allows a consumer or manufacturer to relatively easily fold a portion of blank **10** without removing the portion being folded from blank **10**.

[0016] Front wall panel **12** features a lower portion **20** and an upper portion **22**. Lower portion **20** has a line of perforation **24**, which forms an insertion slit **26**. For the purposes of this document, "line of perforation" means a score line or other area of weakness formed in blank **10** that allows a consumer to easily tear away a portion of blank **10** or puncture blank **10**. Insertion slit **26** stays closed until the consumer presses against the perforation **24** to form the slit **26**. Insertion slit may be located anywhere on front wall panel **12**, may extend between front wall panel **12** and side wall panels **16**, or may be located on side wall panels **16** alone.

[0017] Extending from upper portion **22** of front wall panel **12** is utility flap **28**. Utility flap **28** is preferably joined to front wall panel **12** by a line of weakness **30** that allows it to be folded over.

[0018] Utility flap **28** preferably also attached to upper portion **22** of front wall panel **12** by two small lines of perforation **24** that form tear away strip **32** (described below). Utility flap **28** may optionally extend the full distance of front panel or may extend a smaller distance. Although preferably associated with front wall panel **12**, utility flap **28** may be provided anywhere on blank **10** such

that it is allowed to perform the tucking functions described below. Utility flap **28** is shown as trapezoidal in shape, but it should be understood that it may be any shape that allows it to perform the desired tucking function, such as square, triangular, circular, semi-circular and so forth. Utility flap **28** is also shown as a single flap, but it should be understood that utility flap may be multiple flaps or a single flap with multiple panels.

[**0019**] Upper portion **22** of front wall panel **12** also features a locking tab **34**. In use, locking tab **34** is adapted to cooperate with insertion slit **26** to close container, as will be described more fully below. Locking tab **34** may be any shape or size and may be located anywhere on carton, as long as it provides the desired closure function. For example, it is possible for the edges of new lid **60** (described further below) to provide the desired locking tabs **34**. Additionally, locking tab and insertion slit may have their locations reversed such that locking tab is on the lower portion **20** of front wall panel, extending between front wall panel **12** and side wall panels, or on side panels **16** alone **12** and insertion slit is on the upper portion **22**.

[**0020**] Locking tab **34** is shown as a single tab, but it should be understood that locking tab may be multiple tabs. There may also be provided one or more locking tab and slit combinations. Locking tab and slit need not be positioned on the center of container **100**, but may be positioned at the edges of container or be otherwise offset.

[**0021**] **FIG. 4** shows utility flap **28** and locking tab **34** in their formed position once the container **100** (that is ultimately formed from blank **10**) is assembled and opened by removal of the tear away strip **32** described below.

[**0022**] Referring back to **FIG. 1**, also extending from upper portion **22** of front wall panel **12** is tear away strip **32**. (In some embodiments, however, tear away strip **32** is not connected to front wall panel **12**. It may extend from lid panel **36***a* only.) Tear away strip **32** is provided to allow the container **100** that is ultimately formed from blank **10** to be provided in a typical box-type shape, as shown in **FIGS. 2-6**. The consumer removes and discards tear away strip **32**, shown in cross-hatchings in **FIGS. 3 and 4**, to access the contents of container. It should be understood that rather than discarding tear away strip **32**, tear away strip **32** may be printed with promotional tools, including coupons or game pieces. As discussed above, removal of tear away strip defines utility flap **28** and locking tab **34**.

[**0023**] At the top of front wall panel upper portion **22** is lid panel **36***a*. Lid panel **36***a* (along with **36***b*) forms the top lid of container **100** in the container's assembled position, as shown in **FIG. 3**. Once box **100** is opened and collapsed, lid panel **36***a* forms the front lid **36** of container **100**, as shown in **FIGS. 4 and 5**.

[**0024**] Returning back to **FIG. 1**, back wall panel **14** preferably has a lower portion **38** and an upper portion **40**. Lower portion **38** and upper portion **40** of back wall **14** are separated by a line of weakness defining a hinge **42**. Upper portion **40** is further divided by another line of weakness **30** defining back lid panel **44** and upper lid panel **36***b*. Upon assembly, upper lid panel **36***b* and lid panel **36***a* are glued to form lid **36** (as shown in **FIG. 2**). Base panels **52***a* and **52***b* extend from front wall panel **12** and back wall panel **14**.

[**0025**] Side wall panels **16** connect front wall panel **12** and back wall panel **14**. Side wall panels **16** have lower portions **46** and upper portions **48**. Lower portions **46** of the side walls **16** form the main wall area and upper portions **48** form closure flaps **50** upon removal of tear away strip **32** and assembly of blank **10**.

[**0026**] Blank **10** is preferably formed of paperboard, fiberboard, chip board, corrugated or any other easily assembled material. Multiple blanks **10** may be shipped to the food producer in their flat form for assembly and filling on site.

[**0027**] In order to assemble blank **10**, front wall panel **12**, side wall panels **16**, back wall panel **14** are folded to form a rectangular box. Glue or any other adhesive substance or securing mechanism secures glue flap **18** and the other panels in place. Base panels **52***a* and **52***b* are also glued or otherwise adhered to one another and lower dust flaps **19** (if provided) are secured.

[**0028**] At this point, a box **100** with an open top is provided, as shown in **FIG. 2**. Typically, the box will be filled with a bagged food product **54**, such as cereal, crackers, or cookies, although it is also possible to fill it with other items in bags, such as laundry detergent, fertilizer, or any other item as desired.

[**0029**] Once inner portion of box **100** is filled with the bagged product **54**, lid panels **36***a* and **36***b* are preferably glued or otherwise adhered to one another to form lid **36**, and dust flaps **19** are then glued or otherwise adhered to cover the fold joints formed. This provides a container like that shown by **FIG. 3**.

[**0030**] Upon purchase or receipt of the product container, a consumer will remove tear away strip **32** to open the container **100**, as shown in **FIG. 4**. A new lid **60** is now formed by back lid panel **44** (upper portion **40** of back wall), lid panels **36***a* and **36***b*, and closure flaps **50** of the side walls **18**. The lid **60** also features locking tab **34** that is defined upon removal of tear away strip **32**. Front panel **12** also features utility flap **28**.

[**0031**] Once the bagged product **54** is opened and used, the consumer may fold the new lid **60** back along hinge **42** and replace the bag, as shown in **FIG. 5**. Once the bag **54** is placed inside container, its open end **56** should be placed over utility flap **28** and optionally may be crimped over utility flap. Some users may wish to use a bag clip or a paperclip or other closure device to fully secure bag to utility flap **28**, although this is not necessary. After open end **56** of the bag has been folded over the utility flap **28**, the utility flap **28** and bag are folded forward and against front wall panel **12**, securing the bag against moisture and spillage. In other words, the bag is preferably folded once against the front wall panel **12** of container, over utility flap **28**, and is "pinned" or secured against the container **100** when the new lid **60** is closed to help prevent against moisture and spillage. The new lid **60** is folded over and the locking tab **34** (or tabs) is secured in insertion slit **26** for closure.

[**0032**] Container may be printed to provide promotional or marketing material. According to certain embodiments, it is printed so that graphics on the box have the same appearance before and after the box is collapsed. It is also possible, however, the provide new graphics on the lid panels **36***a* and **36***b* that are not seen from the front view until the container is collapsed and locked.

[**0033**] Changes and modifications, additions and deletions may be made to the structures and methods recited above

and shown in the drawings without departing from the scope or spirit of the invention and the following claims.

What is claimed is:

1. A locking container adapted to contain an inner bag, the locking container comprising:

(a) a front wall panel, a side wall panel, or both, having an insertion slit;

(b) a back wall panel having an upper portion and a lower portion separated by a line of weakness adapted to form a hinge between the upper and lower portion;

(c) side walls panels having upper portions and lower portions, the side wall panel upper portions comprising a closure flap;

(d) a tear away strip; and

(e) a lid panel,

wherein removal of the tear away strip reveals a utility flap and a locking tab on the front wall panel, and wherein folding the line of weakness causes the upper portion of the back wall to form the top of the container, causes the lid panel to form a front panel, and causes the closure flaps to slide over the side walls,

wherein the utility flap extends from the front wall panel and has a free end over which an inner bag may lie, the utility flap adapted to fold against the front wall panel to crimp inner bag in place as the locking tab is received in the insertion slit upon closure of the locking container.

2. The locking container of claim 1, wherein the locking container is comprised of paperboard.

3. The locking container of claim 1, wherein the locking container is adapted to be shipped in a flat position and assembled on-site.

4. A method for helping to prevent moisture from reaching contents of a container holding items contained within an open bag or for preventing items from spilling out of the open bag, comprising:

(a) providing a container to hold the open bag, the container having a utility flap;

(b) laying an open end of the bag over the utility flap;

(c) crimping the open end around the utility flap and folding the utility flap against the container such that the bag is folded once against the front wall panel and is folded again over the utility flap to be secured against the container.

5. The method of claim 5, wherein the container further comprises a lid that wraps over the utility flap and bag and secures the container in a closed position.

* * * * *