G. M. CRUSE.

SKULLCAP FRAME AND GUIDE.

APPLICATION FILED FEB. 9, 1920.

1,398,842. Patented Nov. 29, 1921.

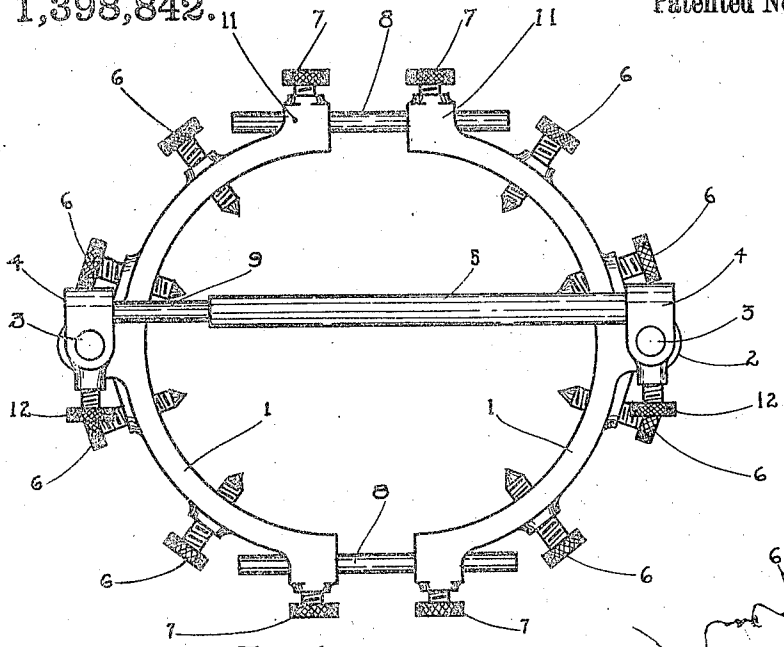

Fig. 1.

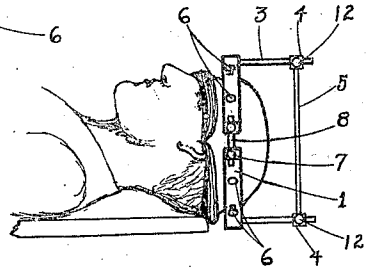

Fig. 3.

Fig. 2.

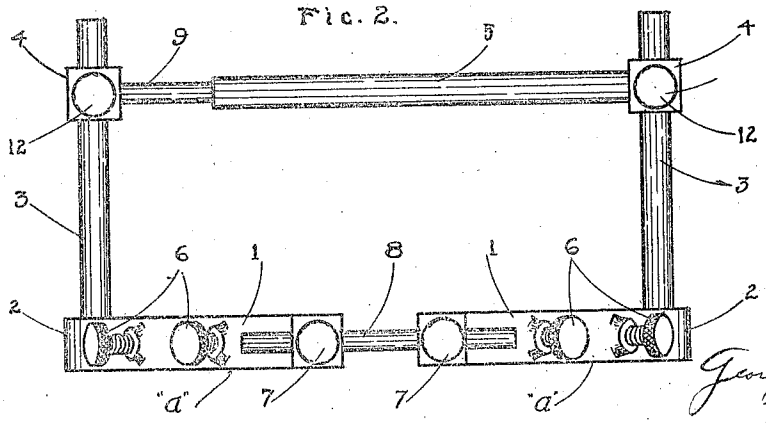

WITNESS

Arthur B. Shaw

Chas. H. Young

George M. Cruse

INVENTOR

BY

Chas. H. Young.

ATTORNEY

UNITED STATES PATENT OFFICE.

GEORGE M. CRUSE, OF STOCKTON, CALIFORNIA.

SKULLCAP FRAME AND GUIDE.

1,398,842. Specification of Letters Patent. Patented Nov. 29, 1921.

Application filed February 9, 1920. Serial No. 357,346.

To all whom it may concern:

Be it known that I, GEORGE M. CRUSE, a citizen of the United States, residing at Stockton, in the county of San Joaquin and State of California, have invented certain new and useful Improvements in Skullcap Frames and Guides, of which the following is a specification.

These specifications and with reference to the drawings, will enable others skilled in the art to which it appertains, to make and use the same.

This invention relates to new and useful improvements in skull cap frame and guide. The principal object of the invention is to provide an instrument for performing autopsy operations in post-mortem examinations.

Another object of the invention is to provide a guide for the cutting instrument used by the autopsy surgeon.

Another object of the invention is to provide a means for holding the cranium of the subject in a rigid position, when the operation is being performed.

With these, and other objects in view, the invention consists in the novel combination and arrangement of parts which will be fully set forth in the following specifications and accompanying drawings, in which:

Figure 1, is a plan view of the instrument.

Fig. 2, is a side view of the instrument.

Fig. 3, illustrates the use of the instrument in performing a post-mortem examination upon a subject.

Referring to the drawing the numeral 1 designates the base and guide ring, which is rectangular in section and being in two semi-circular sections, which, when assembled, produce an annular structure, on the outer circumference of which are formed bosses 2. These bosses 2, rigidly support the standards 3, at right angle to the face of the base and guide ring 1. In constructing the device, the object is to have the standards 3, in parallelism permitting the cross bar handle brackets 4, to slide along the longitudinal axis of standards 3, the object being to permit adjustment of the distance between the face of the base and guide ring and the cross bar handle 5. The cross bar handle brackets are locked in position by set screws 12.

Should there be any irregularity in the parallelism of the standards 3, I have provided the cross bar handle 5, with an opening along its longitudinal axis a distance which in practice will be found necessary. Within this opening is fitted the cross bar 9. It will thus be readily seen the purpose of this construction is to compensate for any variation in parallelism between the two standards 3.

The base and guide ring 1, has a plurality of bosses 11^a, on its outer circumference, which have threaded openings and to which are fitted the plurality adjusting screws 6, which are threaded and have a knurled head for adjusting.

The base and guide ring 1, has bosses 11, provided with openings and set screws 7, for the purpose of holding the base and guide ring adjusting bar 8, in position, after having adjusted the base and guide ring.

Having described the various structural parts of my invention, I will give a description of the purpose and use of my invention.

The great difficulty in performing a post-mortem operation, is to provide a guide for the cutting instrument, as well as means whereby the cranium of the subject can be rigidly held in the desired position during the operation. The device also acts as a holder for the part of the cranium which has been dissected.

In Fig. 3, the instrument is shown as it would be applied in performing the operation. The base and guide ring 1, is adjusted to the required size as herein before explained to fit over the cranium of the subject to be operated upon. The points of the screw pins 6, are then set into the skull of the subject. This secures the base and guide ring. The face indicated by the letter "*a*" on the base and guide for the instrument which is being used to cut through the cranium. The device it will be seen can be used for holding the cranium in a rigid manner. The cross bar handle 5, serves the purpose of holding and turning the cranium. It also provides means of holding the instrument when it is being set in place.

I do not confine myself to any particular set form of construction, or to the use of any certain particular materials, it being the aim to vary structural features which in practice are found to be improvements without in any way detracting from the original scope of the invention.

Having thus described my invention what I claim as new and useful and desire to secure by United States Letters Patent:

A device of the character described, comprising an annular base and guide member which is in two substantially semi-circular sections, an adjustable connection between said sections, set screws carried by the sections to project radially into the interior of the base and guide member, standards carried by the sections and positioned diametrically opposite each other, clamping members adjustably mounted on the standards, and a handle bar connecting the clamping members, said handle bar being composed of slidably connected sections.

In testimony whereof I affix my signature.

GEORGE M. CRUSE.