US00D896323S

# (12) United States Design Patent

Kamiyama

(10) Patent No.: US D896,323 S
(45) Date of Patent: ** Sep. 15, 2020

(54) **TOY CAR**

(71) Applicant: **EPOCH COMPANY LTD**, Tokyo (JP)

(72) Inventor: **Kei Kamiyama**, Tokyo (JP)

(73) Assignee: **EPOCH COMPANY LTD**, Tokyo (JP)

(**) Term: **15 Years**

(21) Appl. No.: **29/681,207**

(22) Filed: **Feb. 22, 2019**

(30) **Foreign Application Priority Data**

Aug. 31, 2018 (JP) ..... 2018-019026

(51) **LOC (12) Cl.** ..... **21-01**

(52) **U.S. Cl.**
USPC ..... **D21/533**; D21/548; D21/550

(58) **Field of Classification Search**
USPC ..... D21/483, 533–562; D12/82, 86, 90, 91, D12/92
CPC ..... B62D 25/00; B62D 35/00; A63H 17/262; A63H 17/00; A63H 3/20; A63H 3/46; A63H 7/02; A63H 17/26; A63H 17/38
See application file for complete search history.

(56) **References Cited**

U.S. PATENT DOCUMENTS

| | | | | |
|---|---|---|---|---|
| D87,517 | S * | 8/1932 | Hoffman | D12/92 |
| D90,961 | S * | 10/1933 | Smith | D21/548 |
| D134,317 | S * | 11/1942 | Duncan, Jr. | D12/92 |
| D232,029 | S * | 7/1974 | Glass et al. | D21/548 |
| D274,420 | S * | 6/1984 | Buehrig | D12/92 |
| D366,296 | S * | 1/1996 | Novak | D21/548 |
| D424,981 | S * | 5/2000 | Cook | D12/91 |
| D446,168 | S * | 8/2001 | Boyanich, Sr. | D12/92 |
| D450,284 | S * | 11/2001 | Caroselli | D12/196 |
| D522,918 | S * | 6/2006 | Khouri | D12/92 |
| D569,309 | S * | 5/2008 | Gueorguiev | D12/92 |
| D626,889 | S * | 11/2010 | Shepard | D12/92 |
| D678,962 | S * | 3/2013 | Tsuchiya | D21/551 |
| D683,267 | S * | 5/2013 | Cook | D12/92 |
| D750,533 | S * | 3/2016 | Li | D12/92 |
| 10,159,235 | B2 * | 12/2018 | McCain | A01K 89/01921 |

FOREIGN PATENT DOCUMENTS

CN 304438702 * 1/2018

OTHER PUBLICATIONS

Lansdowne Models, announced Apr. 5, 2019 [Online], [Site Visited Mar. 4, 2020] Available From Internet, URL: <https://www.ebay.com/itm/Lansdowne-Models-1-43-Scale-LDM3A-1956-MG-Magnette-Z-Series-Island-Green-/163634906102> (Year: 2019).*

(Continued)

*Primary Examiner* — Ian Simmons
*Assistant Examiner* — Donald B Rose, Jr.
(74) *Attorney, Agent, or Firm* — Fitzgerald IP Law; John K Fitzgerald, Esq.

(57) **CLAIM**

The ornamental design for a toy car, as shown and described.

**DESCRIPTION**

FIG. **1** is a front perspective view of a toy car showing my new design;
FIG. **2** is a rear perspective view thereof;
FIG. **3** is a right side view thereof;
FIG. **4** is a left side view thereof;
FIG. **5** is a front view thereof;
FIG. **6** is a rear view thereof; and,
FIG. **7** is a top view thereof.
The broken lines shown are included for the purpose of illustrating portions of the article which form no part of the claimed design.

**1 Claim, 7 Drawing Sheets**

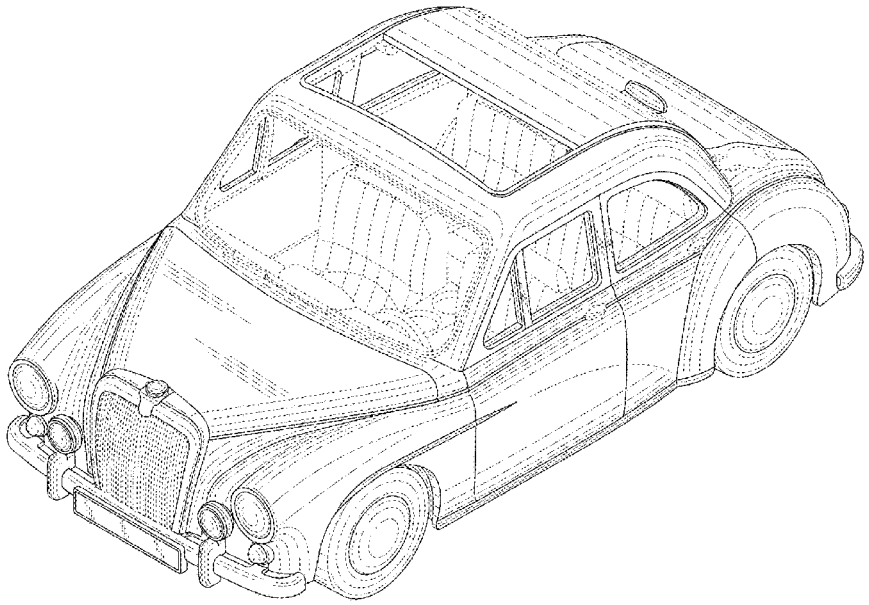

(56) **References Cited**

OTHER PUBLICATIONS

Oxford Diecast, announced Sep. 13, 2016 [Online], [Site Visited Mar. 12, 2020] Available From Internet, URL: <https://www.oxforddiecast.co.uk/collections/mg/products/mg-za-magnette_northumberland-county-constabulary-mgz003> (Year: 2016).*

1958 MG Magnette For Sale, announced Mar. 1, 2020 [Online], [Site Visited Mar. 12, 2020] Available From Internet, URL: <https://www.carandclassic.co.uk/car/C1207564> (Year: 2020).*

* cited by examiner

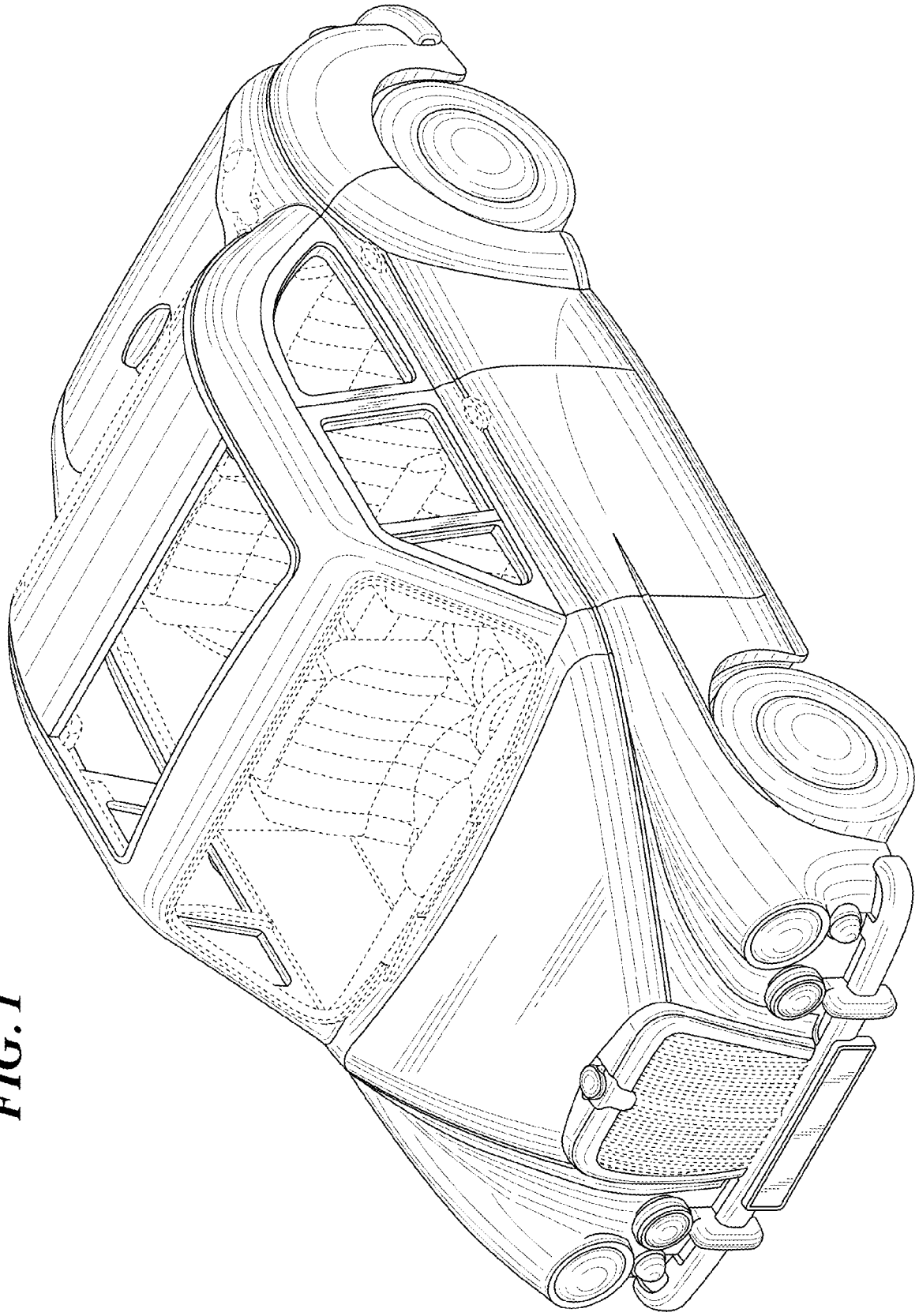

FIG. 1

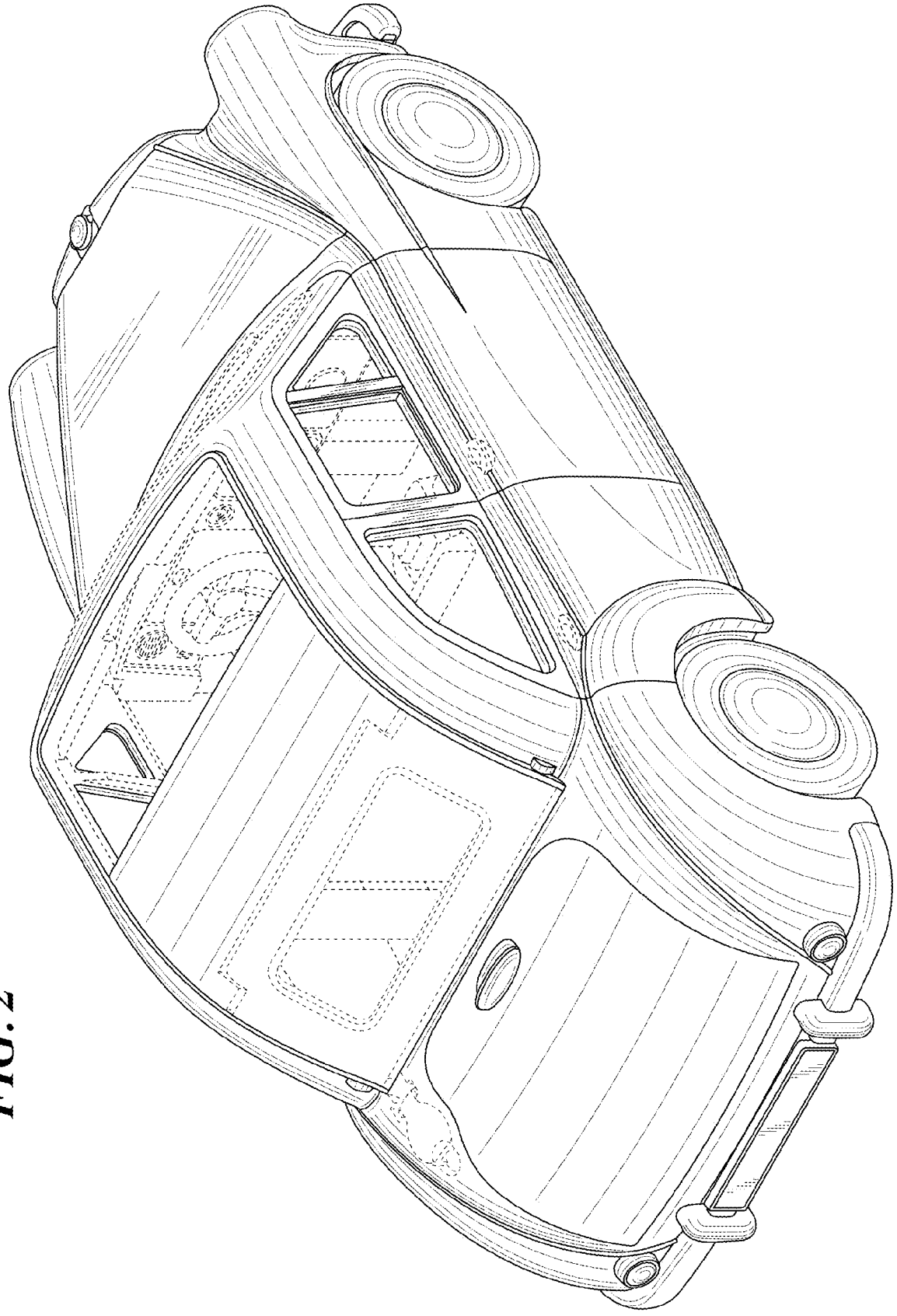

FIG. 2

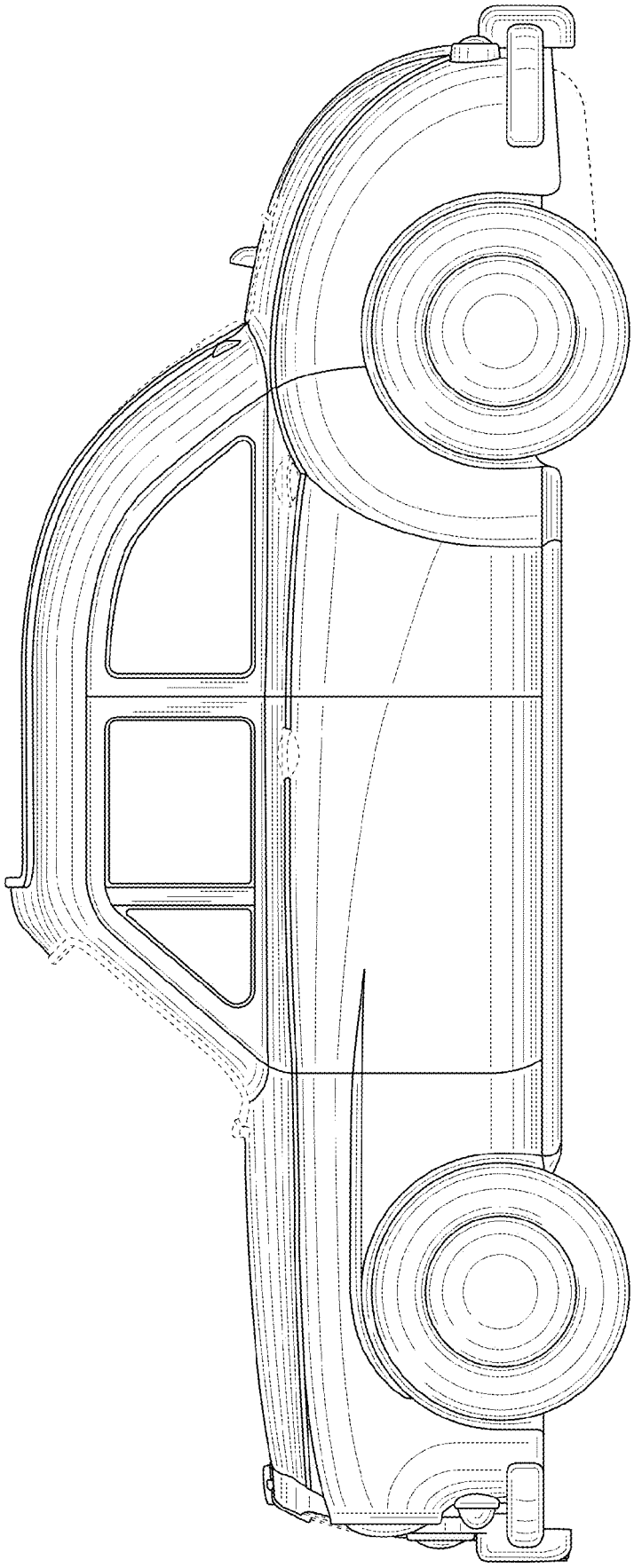

FIG. 3

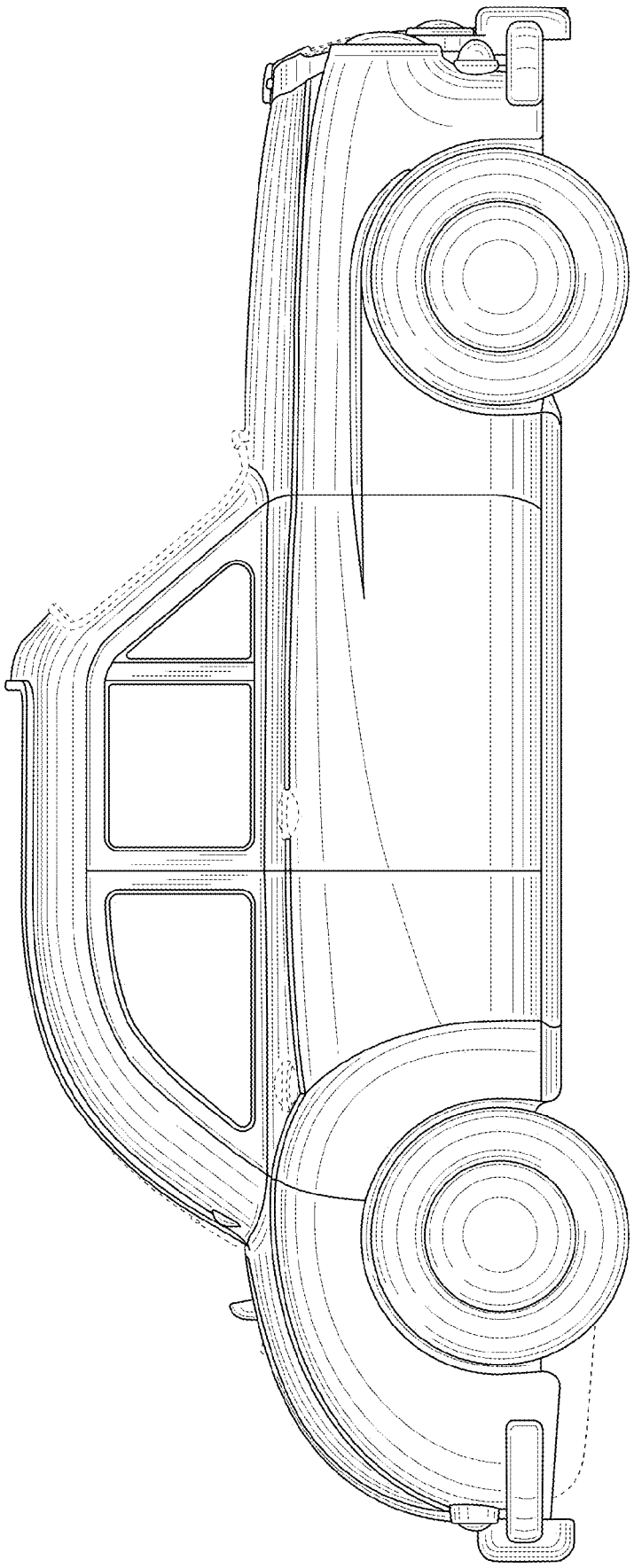

FIG. 4

*FIG. 5*

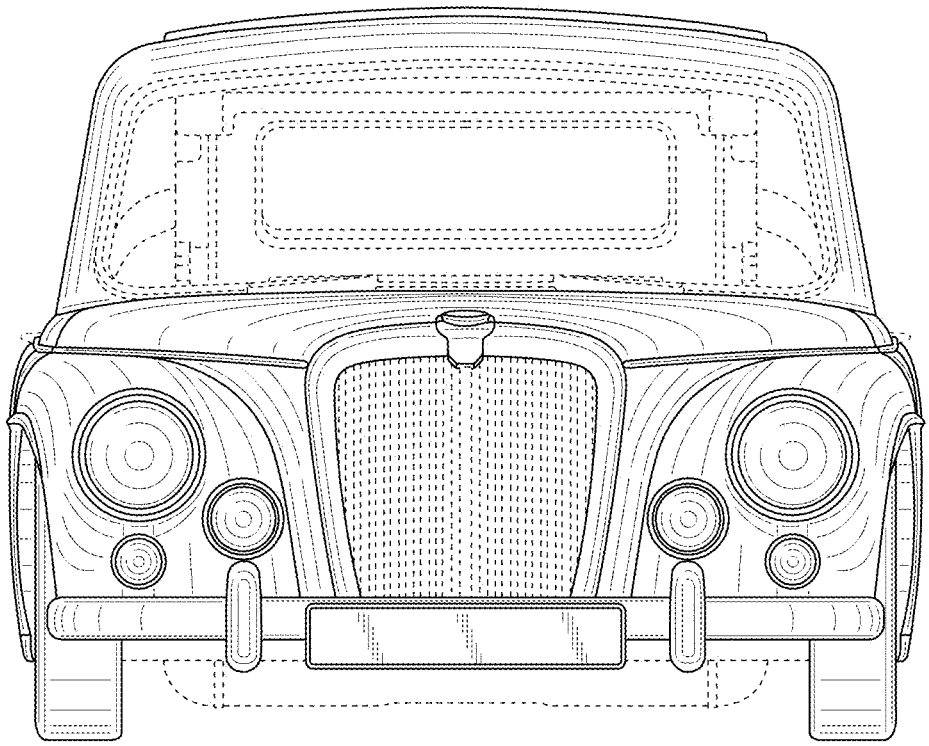

*FIG. 6*

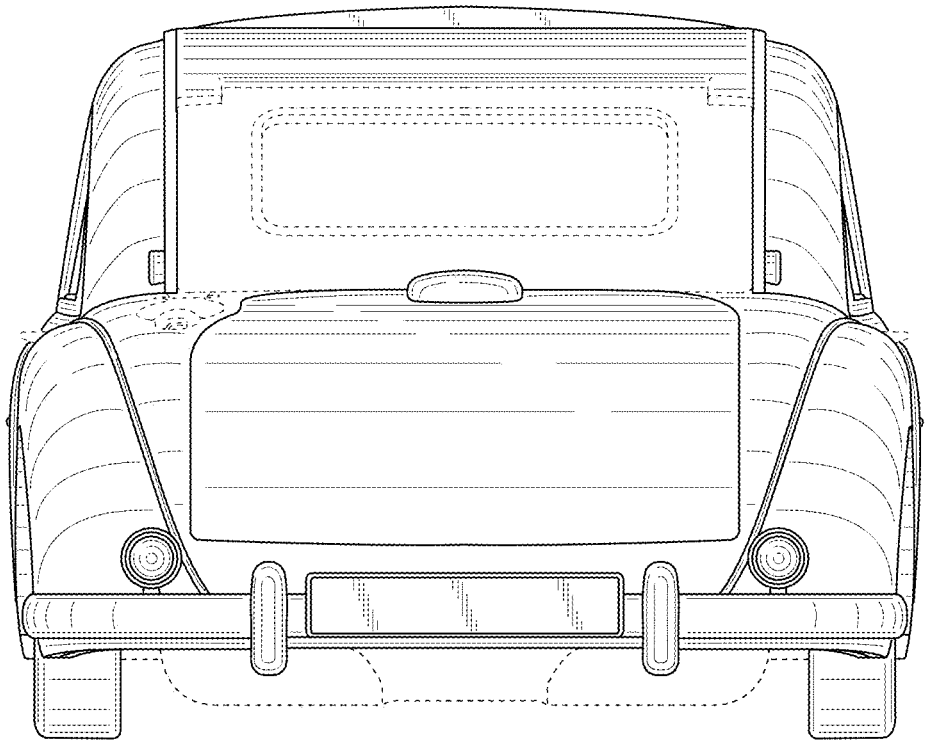

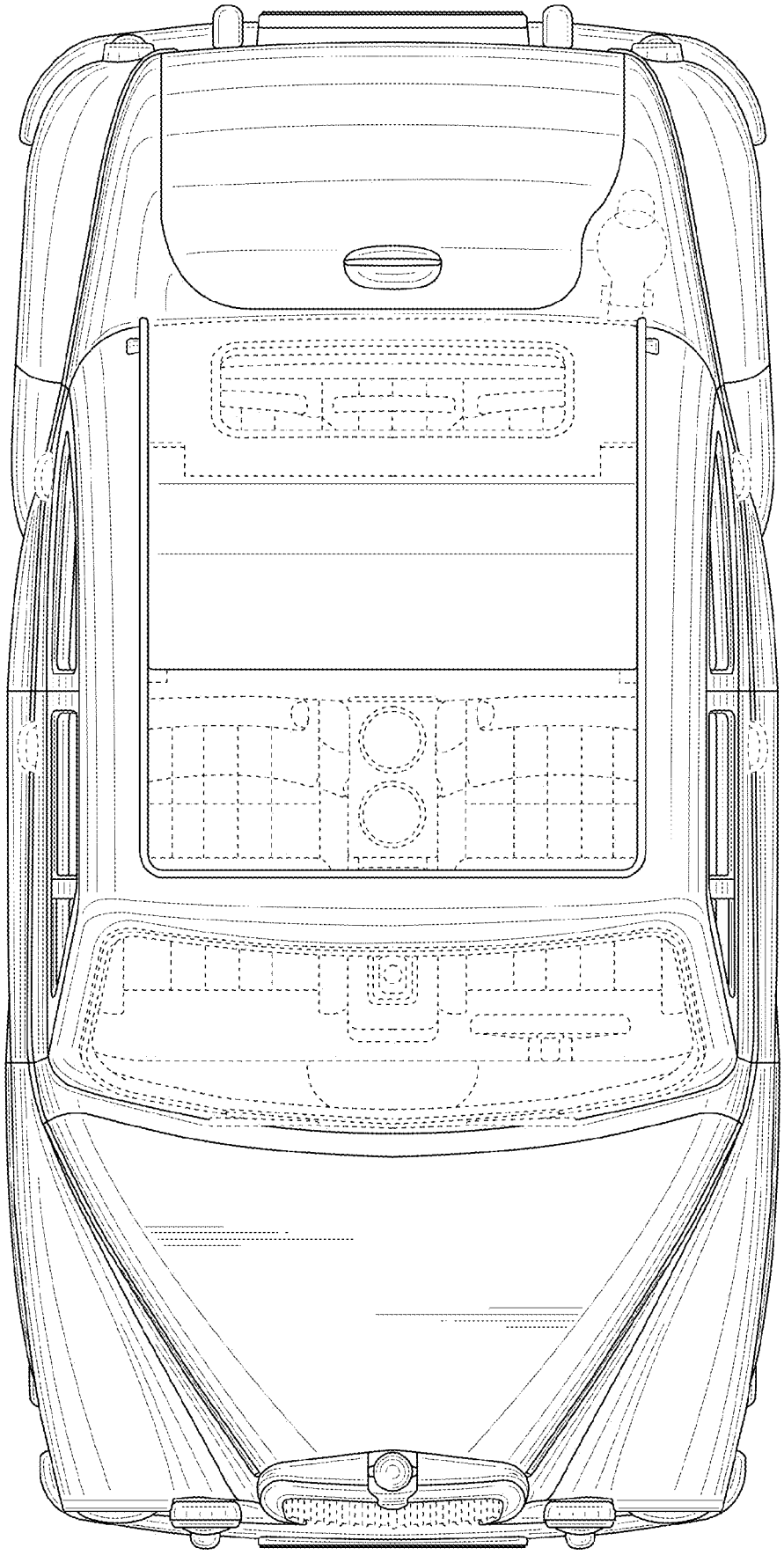

FIG. 7