United States Patent [19]

Clough et al.

[11] **Patent Number: Des. 315,549**

[45] **Date of Patent: ** Mar. 19, 1991**

[54] **PORTABLE COMPUTER WITH TOUCH SCREEN**

[75] Inventors: **William A. Clough**, Bainsville; **Daniel Ouelette**, St. Luc, both of Canada

[73] Assignee: **Microslate, Inc.**, Brossard, Canada

[**] Term: **14 Years**

[21] Appl. No.: **271,061**

[22] Filed: **Nov. 14, 1988**

[52] **U.S. Cl.** **D14/100**

[58] **Field of Search** ..... D14/100, 106, 107, 113, D14/115; D18/1, 7, 11, 12; 235/145 A, 145 R; 312/208; 340/700, 706, 711, 712; 341/22, 23; 358/249, 254; 364/706-710; 400/489, 492, 496

[56] **References Cited**

U.S. PATENT DOCUMENTS

D. 278,341	4/1985	Scheid	D14/100
D. 303,788	10/1989	Kondoh et al.	D14/100
D. 305,536	1/1990	Richards et al.	D14/100
4,545,023	10/1985	Mizzi	364/708 X
4,811,004	3/1989	Person et al.	340/706 X
4,812,830	3/1989	Doering	340/712
4,814,760	3/1989	Johnston et al.	340/712 X

Primary Examiner—Wallace R. Burke
Assistant Examiner—Freda S. Nunn
Attorney, Agent, or Firm—Nutter, McClennen & Fish

[57] **CLAIM**

The ornamental design for a portable computer with touch screen, as shown and described.

DESCRIPTION

FIG. **1** is a top, front, right side perspective view of a portable computer with touch screen showing our new design;

FIG. **2** is a right side elevational view thereof on an enlarged scale;

FIG. **3** is a left side elevational view thereof on an enlarged scale;

FIG. **4** is a bottom plan view thereof on an enlarged scale; and

FIG. **5** is a top plan view thereof on an enlarged scale.

The rear is a mirror image of the front as shown in FIG. **1.**

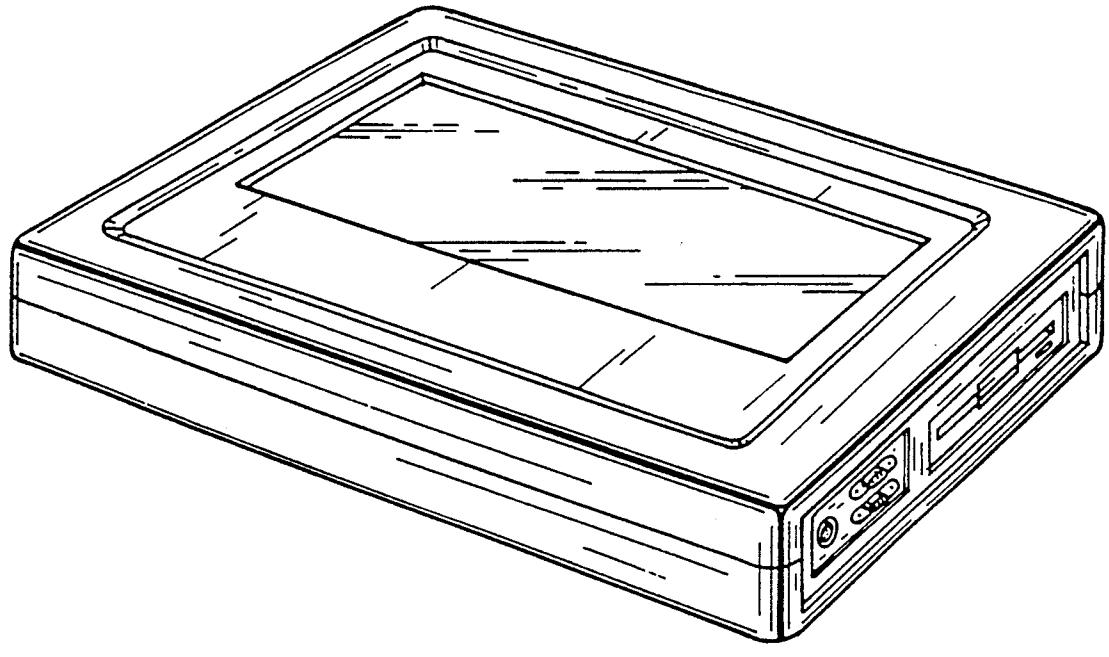

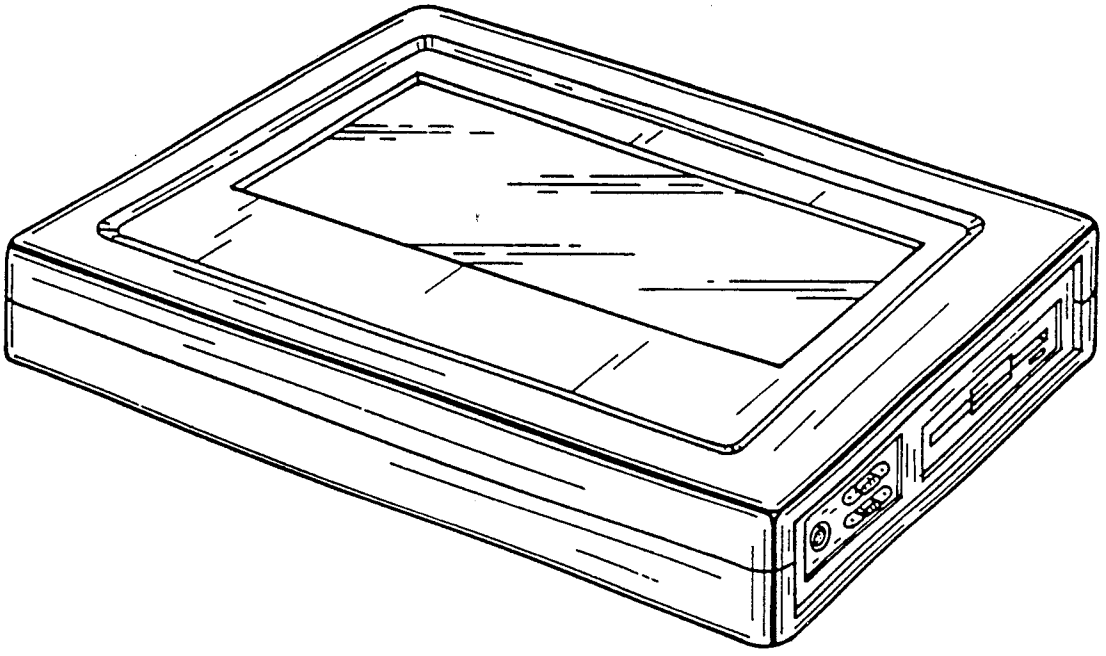

FIG. 1

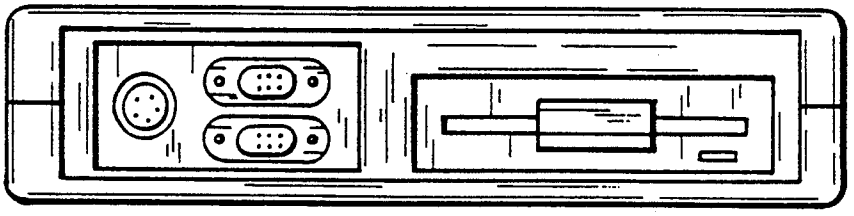

FIG. 2

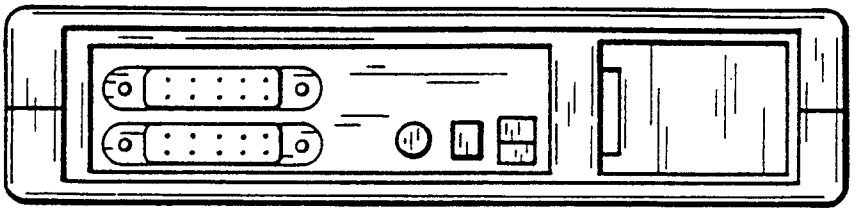

FIG. 3

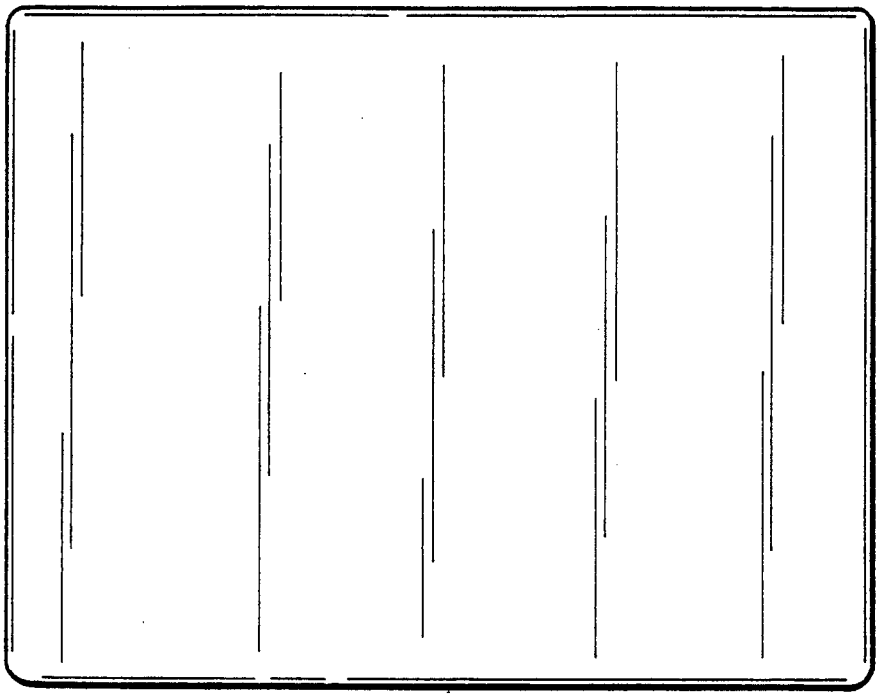

FIG. 4

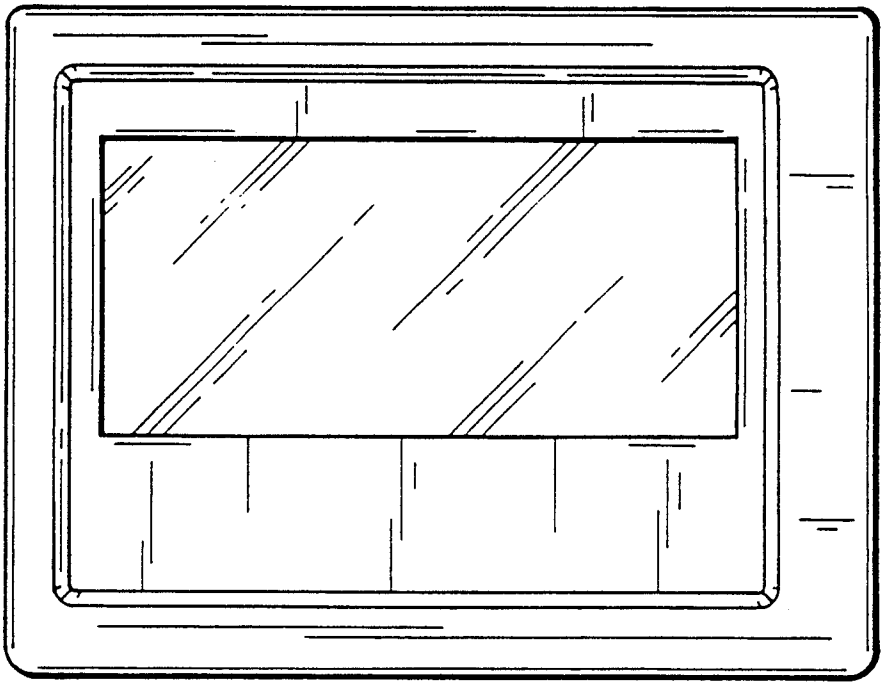

FIG. 5