Oct. 3, 1950 D. S. WYSE 2,524,617

HOLDER

Filed May 3, 1947

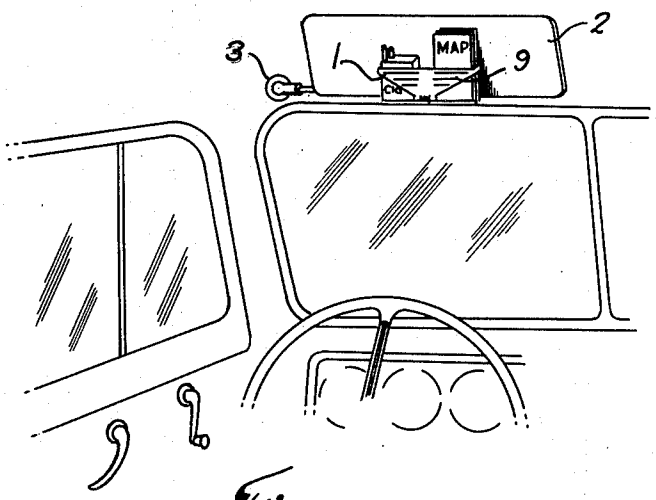

Fig.-1

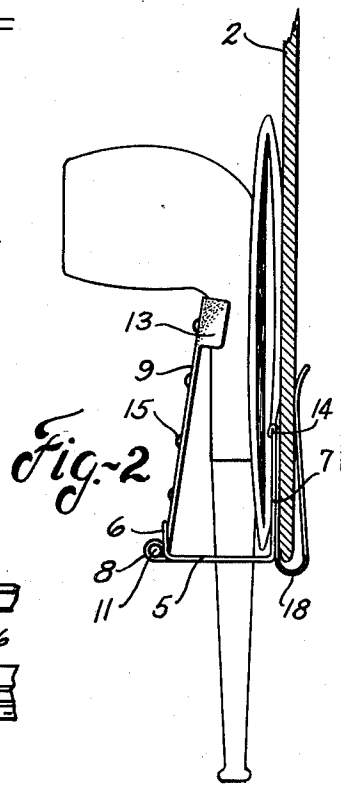

Fig.-2

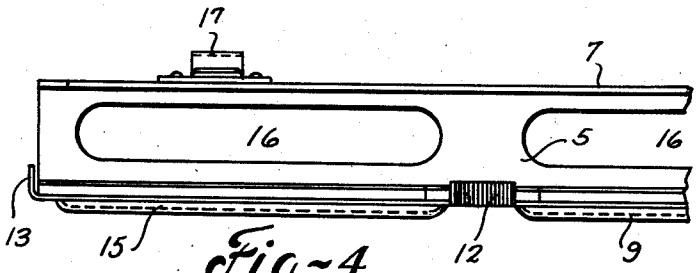

Fig.-4

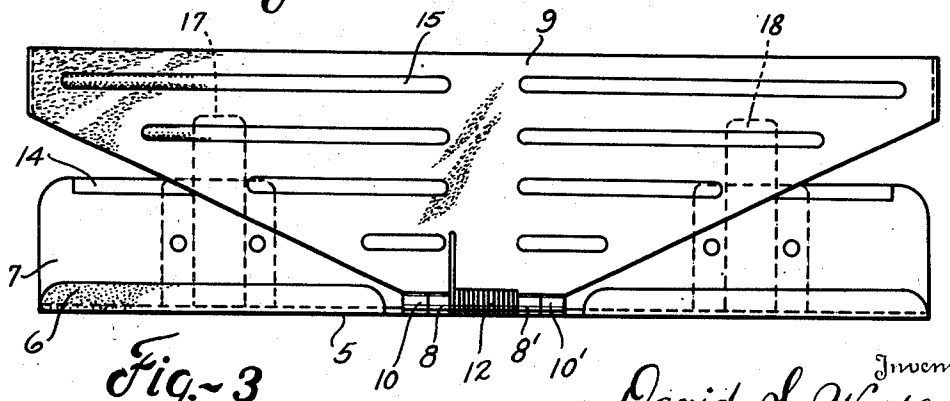

Fig.-3

Inventor

David S. Wyse

By D. L. Walker

Attorney

Patented Oct. 3, 1950

2,524,617

UNITED STATES PATENT OFFICE

2,524,617

HOLDER

David S. Wyse, Dayton, Ohio

Application May 3, 1947, Serial No. 745,855

6 Claims. (Cl. 211—89)

1

This invention pertains to holders and more particularly to a holder which is detachably engageable with a supporting structure.

Various multi-purpose holders have heretofore been known, which however have been of flimsy character, and not universally adapted to various articles, or for detachable engagement with a wide range of supporting structures.

The present holder is of compact form, of relatively rigid construction, and universally adaptable for the reception of a wide range of miscellaneous articles.

The object of the present invention is to improve the construction as well as the means and mode of use of such holders, whereby they may not only be economically manufactured, but will be more efficient in use, universally adaptable to different supports, capable of receiving a wide range of miscellaneous articles, having relatively few parts and be unlikely to get out of repair.

A further object of the invention is to provide a universal holder which may be easily engaged with different supporting structures.

A further object of the invention is to provide a universal holder in which a wide range of miscellaneous articles may be supported.

A further object of the invention is to provide a holder having the advantageous structural features, and the inherent meritorious characteristics and the mode of operation as hereinafter set forth.

With the above primary and other incidental objects in view, as will more fully appear in the specification, the invention intended to be protected by Letters Patent consists of the features of construction, the parts and combination thereof, and the mode of operation, or their equivalents, as hereinafter described or illustrated in the accompanying drawing.

In the drawing, wherein is illustrated the preferred but not necessarily the only form of embodiment of the invention,

Fig. 1 is a perspective view of the holder as installed, for example, upon a sun visor of an automobile.

Fig. 2 is a side elevation of the holder with various articles supported therein.

Fig. 3 is a front view of the holder, and

Fig. 4 is a fragmentary top view thereof.

Like parts are indicated by similar characters of reference throughout the several views.

The present holder is shown attached to the sun visor of an automobile, it being well adapted for such use. The holder may however be used elsewhere and is shown in such location merely for the purpose of illustration.

Referring to the drawing, a holder embodying the present invention and generally designated at 1, is shown attached to a sun visor 2 which is secured in the normal manner to the roof portion 3 of an automobile. When used in an automobile as shown, the present holder provides a very convenient and handy means of carrying cigarettes, pipes, maps and the like, all within easy reach of the driver.

2

The base member 5 of the holder has front and rear upstanding flanges 6 and 7, respectively, which confine the bottom of the articles placed therein. The front flange 6 is medially interrupted to provide an opening for the fixed bearings 8—8' of a hinge joint, such bearings being integral with the base 5.

Cooperating with the base 5 is an oscillatory retainer or presser member 9 having bearings 10—10' integral therewith. These bearings in cooperation with the bearings 8—8' and a pivot pin 11 provide a pivotal mounting for the retainer upon the base 5. Surrounding the pin 11 is a coil spring 12, one end of which is secured to the base, the other end of which bears upon the retainer 9 to resiliently urge the retainer toward the rear flange 7 of the base member. The opposite ends of the retainer have inwardly projecting extensions 13 thereon, which prevent endwise movement of any articles placed in the holder.

To increase the rigidity of the holder, the upper margin of the rear flange 7 is reversely bent upon itself thereby forming a longitudinal bead or rib 14. The retainer 9 is also strengthened by longitudinally embossed ribs 15 thereon.

The base 5 is perforated at spaced intervals or may contain two spaced elongated slots 16. Such perforations perform the double purpose of reducing the weight and mass of the holder, and also provide means for holding certain types of articles. For example, a pipe, if placed within the holder is inserted stem downward, with the stem extending through the perforations or slots 16.

To the back of the flange 7 is secured a pair of spring clamps 17, the arms 18 of which frictionally engage the supporting structure.

As shown in Fig. 2, the sun visor 2 or other supporting member, is placed intermediate the spring arms 18 and the back flange 7 of the base. The arms 18 have sufficient tension to firmly grip the visor or other supporting member, and maintain the holder in adjusted position thereon.

When so positioned upon a supporting member, the member becomes to some extent the back surface of the holder, against which the articles to be held are forced under influence of the spring backed retainer 9. When relatively thin articles, such as maps are placed in the holder, the supporting member becomes the backing therefor against which the maps are held by the retainer 9. Relatively thick articles however, such as a pack of cigarettes, will be fully supported within the flanges 6—7 of the base, and retained therein by the retainer 9.

From the above description it will be apparent that there is thus provided a device of the char-

acter described possessing the particular features of advantage before enumerated as desirable, but which obviously is susceptible of modification in its form, proportions, detail construction and arrangement of parts without departing from the principle involved or sacrificing any of its advantages.

While in order to comply with the statute the invention has been described in language more or less specific as to structural features, it is to be understood that the invention is not limited to the specific features shown, but that the means and construction herein disclosed comprise the preferred form of several modes of putting the invention into effect, and the invention is therefore claimed in any of its forms or modifications within the legitimate and valid scope of the appended claims.

Having thus described my invention, I claim:

1. A universal holder for miscellaneous articles, including a perforated base member, front and rear upstanding flanges thereon, a longitudinally extending reinforcing bead on one of said flanges, a pair of spaced fixed hinge bearings integral with the base and substantially medially disposed along one edge thereof, a retainer member, longitudinally extending reinforcing means thereon, a pair of spaced hinge bearings formed integrally with the retainer for cooperation with the base bearings, a pintle pin transfixing said bearings and providing a pivotal mounting for the retainer, a torsion spring surrounding the pintle pin, the opposite ends of which engage the base member and the retainer, respectively, to urge the retainer toward the opposite base flange, laterally extending projections adjacent the top of the retainer integrally united with the side margins of said retainer, and means for detachably securing said holder to a supporting member including a plate fixedly secured to the base member on the opposite side thereof from the hinge connection, an inherently resilient tongue struck from said plate, the top of said tongue resiliently contacting the top of the rear flange on the base member, the construction and arrangement being such that the supporting member is resiliently gripped intermediate the rear flange and the tongue to maintain the holder in adjusted position upon the supporting member, and the articles to be held therein are resiliently gripped intermediate the supporting member and the retainer.

2. A holder for miscellaneous articles of the type wherein a spring clamp secured thereto is detachably engageable with a supporting member, characterized by a base member, upstanding front and rear flanges along the longitudinal margins thereof, and within which the articles to be held are retained, a retainer member pivotally secured to the front margin of said base, inturned ends thereon within which the articles are confined, a torsion spring mounted on the base and engaging and urging said retainer member inward toward the rear base flange, reinforcing means extending longitudinally of the retainer member and base member, the base member being perforated at longitudinally spaced intervals, through which perforations certain articles may project, the construction and arrangement being such that the articles to be retained in the holder are gripped intermediate the flanges and held under the yielding pressure of the retainer member.

3. A universal holder for miscellaneous articles, including a channel member having upstanding flanges and a connecting perforated base member, a retainer member pivotally secured to the base member adjacent one of said flanges, means urging said retainer member toward the other of said flanges, and means for detachably engaging said holder with a supporting member, the construction and arrangement being such that the articles to be retained therein are resiliently gripped intermediate the supporting member and the retainer member.

4. A holder for miscellaneous articles to be detachably engaged with a supporting structure, including a perforated base member, through the perforations of which various articles may be extended, an upstanding rear flange on said base member, friction clamps fixedly secured thereto for frictional engagement with a supporting member, a pivotally mounted retainer member on said base member, transversely extending projections on the opposite ends of the retainer member and means for biasing said member toward the rear flange, the construction and arrangement being such that articles to be held in the holder are retained within the transversely extending projections of the retainer member under the yielding resistance of said member.

5. A holder for miscellaneous articles to be detachably engaged with a supporting structure, including a base member, an upstanding flange thereon, a retainer pivotally mounted upon the opposite margin of the base member in parallel relatively spaced relation with the said flange, a second flange also mounted on the base member in substantially aligned relation with the retainer, and over which the retainer extends, yieldingly resilient means urging said retainer toward the first mentioned flange to clamp therebetween under the yielding resiliency of the retainer the articles to be retained in the holder, and clamp means secured to the back of the first mentioned flange for detachably engaging the holder with a supporting member.

6. A holder for miscellaneous articles including a channel member, friction clamps secured to the back of said channel for detachably engaging the channel with a supporting member, an oscillatory presser member pivotally secured to the front of said channel, spring means resiliently urging said pivotal member toward the supporting member, against which the articles to be retained in the holder are resiliently held under influence of the pivotal member, and lateral extensions on the ends of said pivotal member engageable with the articles within the holder to restrain endwise movement thereof.

DAVID S. WYSE.

REFERENCES CITED

The following references are of record in the file of this patent:

UNITED STATES PATENTS

Number	Name	Date
462,123	Friede	Oct. 27, 1891
665,140	Shonnard	Jan. 1, 1901
702,523	Yawman	June 17, 1902
871,144	Reinhard	Nov. 19, 1907
1,785,753	Weisner	Dec. 23, 1930
2,242,150	Sievers	May 13, 1941
2,279,442	Burns et al.	Apr. 14, 1942

FOREIGN PATENTS

Number	Country	Date
14,605	Great Britain	1892
498,535	Great Britain	Jan. 10, 1939

Certificate of Correction

Patent No. 2,524,617 **October 3, 1950**

DAVID S. WYSE

It is hereby certified that error appears in the printed specification of the above numbered patent requiring correction as follows:

Column 2, line 52, for the word "backed" read *biased*;

and that the said Letters Patent should be read as corrected above, so that the same may conform to the record of the case in the Patent Office.

Signed and sealed this 12th day of December, A. D. 1950.

[SEAL]

THOMAS F. MURPHY,
Assistant Commissioner of Patents.