United States Patent

Shames et al.

[15] **3,637,143**

[45] **Jan. 25, 1972**

[54] HANDLE-CONTROLLED SPRAY

[72] Inventors: **Harold Shames,** Ardsley; **Sidney J. Shames,** Briarcliff Manor, both of N.Y.; **John F. Logan,** Pequannock, N.J.

[73] Assignee: **Melard Manufacturing Corp.,** Bronx, N.Y. by said Logan

[22] Filed: **May 28, 1969**

[21] Appl. No.: **830,216**

[52] U.S. Cl. **239/283,** 239/530, 239/535, 239/577, 239/588

[51] Int. Cl. **B05b 15/06**

[58] Field of Search 239/282, 285, 530, 534, 570, 239/535, 572, 576, 577, 588, 587, 485, 482, 508, 529, 460, 318; 251/245, 303, 240

[56] **References Cited**

UNITED STATES PATENTS

2,789,013	4/1957	Bletcher et al.	239/570 X
2,957,705	10/1960	Herbenar	251/303 X
2,984,452	5/1961	Hooper	251/303 X
3,042,312	7/1962	Packard	239/586 X
3,107,861	10/1963	Penkoff	239/577
3,207,443	9/1965	Gilmour	239/586 X
3,445,069	5/1969	Druge	239/586 X
3,461,870	8/1969	Van Linge	239/310 X
2,104,468	1/1938	Osborn	251/240
2,873,941	2/1959	Kortchmar	251/303 X
2,975,804	3/1961	Dunn et al.	239/318 X

FOREIGN PATENTS OR APPLICATIONS

886,398	8/1953	Germany	239/530
656,723	10/1963	Italy	239/588

Primary Examiner—M. Henson Wood, Jr.
Assistant Examiner—John J. Love
Attorney—Norman Lettin

[57] **ABSTRACT**

A handle-controlled spray is provided for bathroom use with faucets or as a shower, wherein controlled flow therefrom is initiated by squeeze-type pressure. The handle-controlled spray has a safety flow valve that is self-closing with the pressure and a drip-preventing head.

4 Claims, 13 Drawing Figures

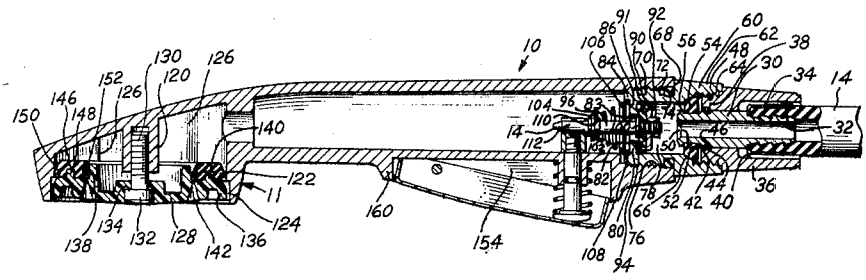

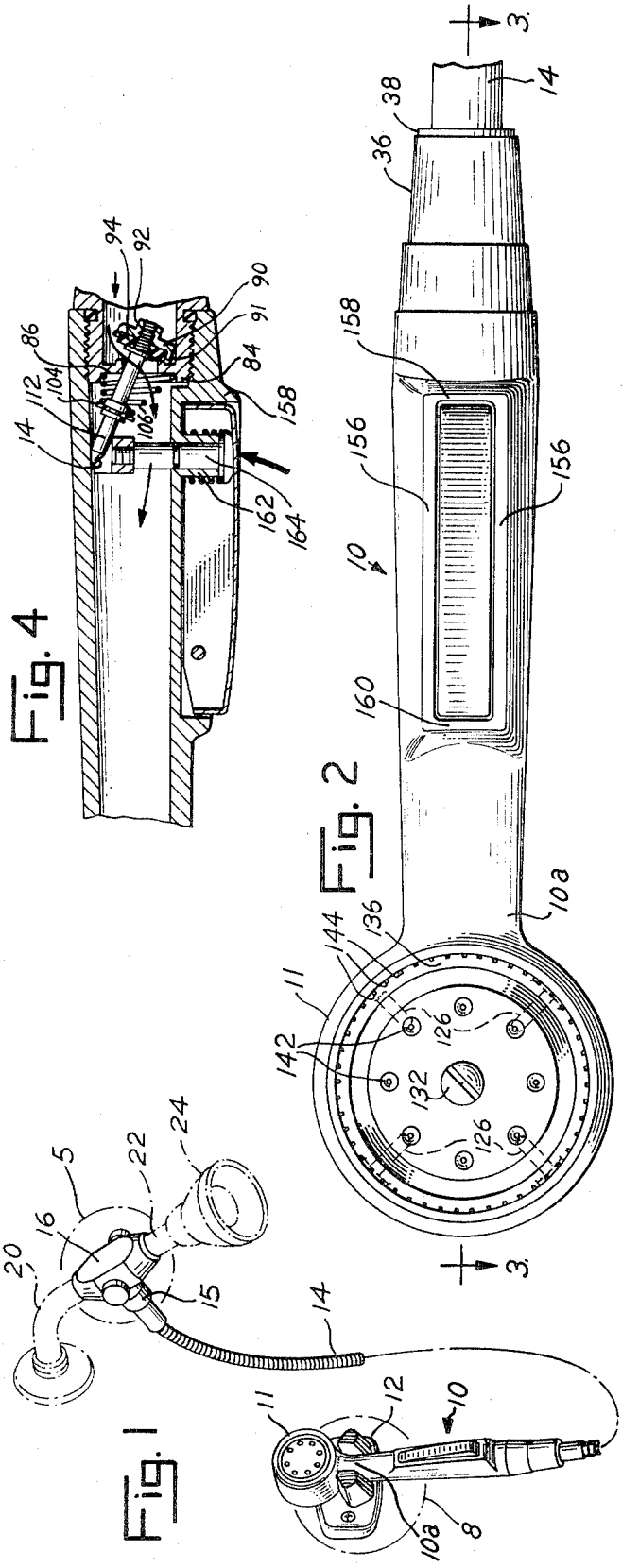

Fig. 1

Fig. 2

Fig. 3

Fig. 4

INVENTORS
HAROLD SHAMES
SIDNEY J. SHAMES &
JOHN LOGAN

BY Bair, Freeman & Molinare
ATTORNEYS

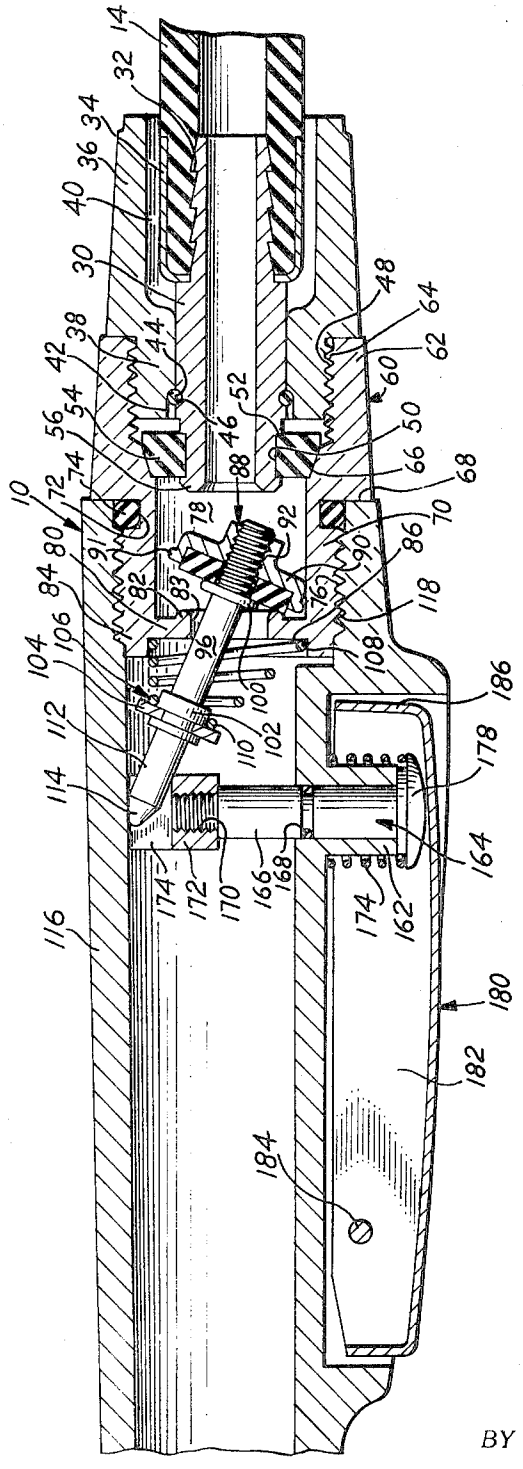

Fig. 4A

INVENTORS
HAROLD SHAMES
BY SIDNEY J. SHAMES &
JOHN LOGAN

Bair, Freeman & Molinare
ATTORNEYS

Fig. 5

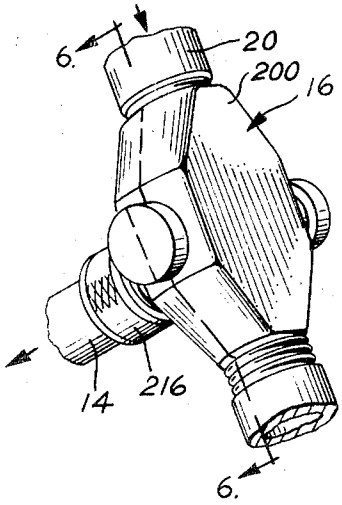

Fig. 6

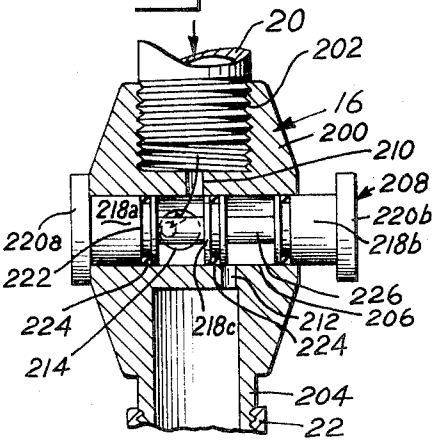

Fig. 7

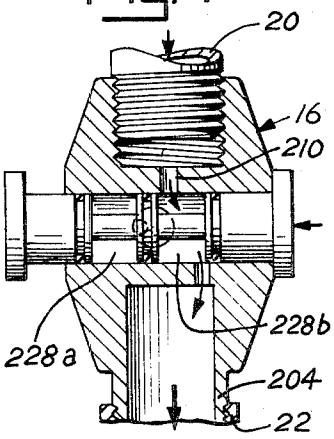

Fig. 8

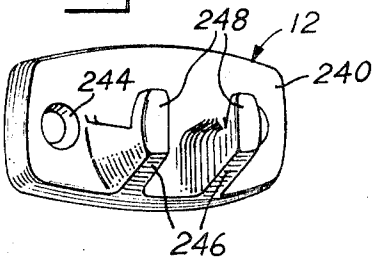

Fig. 9

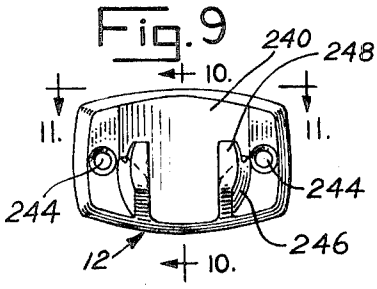

Fig. 10

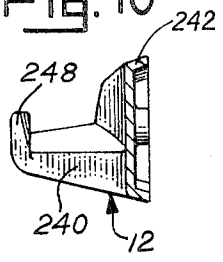

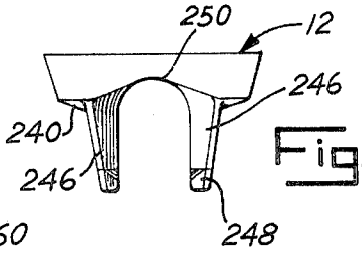

Fig. 11

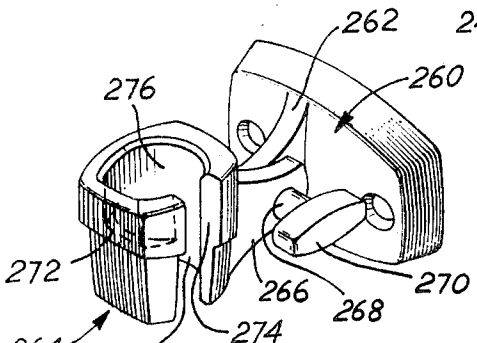

Fig. 12

INVENTORS
HAROLD SHAMES,
SIDNEY J. SHAMES &
JOHN LOGAN
BY
Bair, Freeman & Molinare
ATTORNEYS

HANDLE-CONTROLLED SPRAY

SUMMARY OF THE INVENTION

Handle-controlled sprays have been used heretofore in kitchens and bathrooms. Prior constructions have lacked appeal for use in bathrooms or as shower units either because of lack of a convenient control, inflexibility of adaptability to existing systems, tendency to leak from the spray head, or lack of simplicity, ease or reliability wherein control was attempted.

It is the purpose of this invention to provide a handle-controlled spray that avoids the aforesaid problems and which provides spray flow therefrom upon exercise of simple and convenient squeeze-type pressure.

Another object of this invention is to provide a handle-controlled spray that is characterized by simplicity and inexpensiveness of construction, and by efficiency of operation.

A further object of this invention is to provide the combination of a handle-controlled spray with diverter valve and support accessories which facilitate the use of such a spray in shower-type facilities.

Further objects and advantages of this invention will become apparent as the following description proceeds and the features of novelty which characterize this invention will be pointed out with particularity in the claims annexed to and forming part of this specification.

A preferred embodiment of the invention is shown in the accompanying drawing.

BRIEF DESCRIPTION OF THE DRAWING

FIG. 1 is a fragmentary perspective view showing usage of the handle-controlled spray in a shower-type installation;

FIG. 2 is an enlarged elevational view of the handle-controlled spray taken looking at the spray face of the device;

FIG. 3 is an axial cross-sectional view of the spray device taken on line 3—3 of FIG. 2 and showing the control valve closed;

FIG. 4 is a fragmentary view similar to a portion of FIG. 3 but showing the control valve fully open;

FIG. 4*a* is similar to FIG. 4 but greatly enlarged;

FIG. 5 is an enlarged perspective view of the diverter valve shown located in the circle numbered 5 in the installation of FIG. 1;

FIG. 6 is an axially cross-sectional view taken on line 6—6 of FIG. 5 showing the valve at one of its two alternate positions, namely the one for directing flow to the spray of FIGS. 1–4;

FIG. 7 is a view similar to FIG. 6 but showing the valve in the other of its two alternate positions, namely the one for directing flow to the shower head shown in FIG. 1;

FIG. 8 is an enlarged view of the spray holder shown located in the circle numbered 8 in the installation of FIG. 1;

FIG. 9 is a front elevational view of the holder shown in FIG. 8;

FIG. 10 is a cross-sectional view taken on line 10—10 of FIG. 9;

FIG. 11 is a top plan view taken on line 11—11 of FIG. 9, and

FIG. 12 is a perspective view of an adjustable holder for the spray which is operable to keep the valve of the spray open without being held and thus permits use of the spray as a shower.

DESCRIPTION OF THE PREFERRED EMBODIMENTS

Referring now to the drawings, FIG. 1 illustrates a spray 10 that is being supported in a nonuse position by a wall-mounted bracket 12 whose details are more fully disclosed in FIGS. 8–11. The spray 10 is supplied by a supply hose 14 of a length to permit desired operations and which connects at its upstream end to a diverter valve 16 whose details are shown in FIGS. 5–7.

In the installation of FIG. 1, water is supplied from an elevated wall-mounted type of conduit 20 to one end of the elongated diverter valve 16. A tubular stud 22 extends from

the other end of diverter valve 16 and supplies water to a shower head 24. The supply hose 14 connects to the diverter valve 16 intermediate its ends through a tubular stud 15 that extends transversely of the length of the valve 16. The downwstream end of hose 14 connects to the upstream end of spray 10. The downstream end of spray 10 has a spray head 11 that is diametrically enlarged relative to the adjacent neck 10*a* of spray 10, and which head 11 engages and is supported by spaced support fingers of a wall-mounted spray-support bracket 12.

Referring now to the spray whose features are shown in FIGS. 2–4, the supply hose 14 is shown as being provided at its downstream end with an elongated tubular stud or shank 30 having on the outer periphery thereof a series of annular downstream facing barbs 32. The downstream end of hose 14 is clamped between the barbed portion of tubular stud and a ferrule 34 in a manner well known in the art. An axially elongated nut 36 with a radially reduced portion 38 is arranged to be rotatably mounted on the shank 30. The upstream end of nut 36 has an enlarged bore portion 40 that operates to shield ferrule 34. The downstream end of the nut 36 is provided with a recess 42 which receives or fits over a snapring 44 held in a groove 46 defined on the tubular stud 30. The nut is provided with exterior threads 48. The downstream end of stud 30 has a reduced portion 50 to provide an upstream shoulder 52, and a sealing washer 54 is positioned on reduced portion 50 against shoulder 52. The terminal end of stud 30 is flared at 56 for retaining the sealing washer 54 in position.

The nut 36 connects to a valve-mounting insert generally indicated at 60 which is provided with an upstream annular portion 62 having threads 64 for cooperation with threads 48 on the nut. A frustoconical sealing surface 66 is provided facing generally upstream and against which the sealing washer 54 abuts. The insert 60 is provided with an outer annular abutment shoulder 68 and a downstream annular portion 70 having defined therein an annular recess 72 into which is fitted an O-ring 74 for purposes of sealing. The downstream portion 70 has attachment thread 76 thereon for connection to the upstream end of the spray. The insert 60 thus defines a flow chamber 78 that is bounded at its downstream end by an annular web 80 having an upstream facing valve seat 82 defined thereon with a central flow passageway 83 therethrough. Downstream of the web 80 there is an annular axially extending flange 84 that surrounds the annular spring seat 86. The valve-mounting insert 60 carries a valve member 88 having a cup-shaped valve head 90 with a plurality of outwardly extending spaced ribs 91 which limit the head 90 from engaging the inner wall of the insert 60. The valve head 90 has an internally threaded central boss 92 and head 90 carries an annular valve seal 94. An elongated assembly stem 96 is threaded in boss 92 and extends through flow passageway 83 into the interior of the spray member. The assembly stem 96 carries a seal-retaining flange 100 of smaller dimension than the flow passageway 83. A downstream portion of stem 96 has a cylindrical enlargement 102 that is grooved to receive and retain snapring 104. A helical spring 106 of frustoconical shape is positioned between the snapring 104 and the spring seat 86, with the largest loop 108 engaging seat 86 and the retainer flange 84, and the smallest loop 110 being centered on enlargement 102 and engaging snapring 104. Downstream of the snapring 104 the stem has a cylindrical engagement stud 112 that terminates in a conical tip 114.

The hollow spray body 116 is formed of plastic and has an upstream end internally threaded at 118. The downstream end of the spray body 116 is shaped to define a circular spray head 11. Spray head 11 has a central tubular threaded boss 120. There is also provided an annular cylindrical sealing surface 122. The spray-forming cylindrical surface 124 is provided downstream of sealing surface 122. A plurality of spacing ribs 126 extending generally radially of boss 120 extend inwardly of the wall of the spray. A spray-forming faceplate 128 is mounted by means of bolt 130 having a head 132 that sealingly engages the underside of transverse wall 134 of plate

128. Plate 128 has a cylindrical wall 136 and a sealing surface 138. The upstream side of plate 128 has a circular rib 140 and the plurality of spray bores 142 are provided through the plate 128. There are many more peripheral grooves 144 in wall 136 which cooperate with wall 124 in order to provide a circularly arranged series of outer spray openings. A molded seal member 146 of rubber or similar material and provided with a groove 148 for mounting on rib 140 is provided. The seal member 146 carries outwardly biased sealing lips 150 and 152 which respectively are adapted to engage sealing surfaces 122 and 138 in order to cut off drip of water after the flow of pressurized water has ceased. When the pressure of water is higher than the bias of the sealing lips, then the water is forced through the spray apertures to provide a series of concentric spray streams issuing from the spray head.

Provided on the handle at an attitude facing in the direction of the spray face 11, there is provided a handle recess generally indicated at 154 which is elongated axially of the spray body 116. The handle recess 154 is bounded by spaced longitudinal flanges 156 and by an upstream transverse flange 158 and a downstream transverse flange 160. Within the recess 154 there is a tubular stud 162 that is closer to the upstream flange 158. A headed plunger 164 is provided for movement through the tubular stud 162. The plunger 164 has a shank 166 that is grooved to receive an O-ring 168 that sealingly cooperates with the inner wall of tubular stud 162. The extended tip of plunger 164 is threaded at 170 to cooperate with the guide block 172 shaped at its innermost end to provide a saddle recess 174 for receiving thereinto the extended end of 112 of the assembly stem 96. A spring 174 is slip-fit over tubular stud 162 and is of a length to engage the head 178 of the plunger 164. A squeeze control 180 is formed of sheet metal and shaped to provide spaced longitudinal flanges 182 that lie closely adjacent and inwardly of longitudinal flanges 156 of the handle recess 154. A pivot pin 184 extends through the longitudinal flanges 156 and the longitudinal flanges 182 to provide for pivoting of the squeeze control 180 about the axis of pivot pin 184. An abutment flange 186 at the upstream end of the squeeze control is provided for limiting pivoting of the squeeze control to the position seen in FIG. 3.

From what has been described, the operation of the device should be readily understandable. By squeezing the control 180 inwardly, the plunger 164 is depressed tipping the valve stem 96 and its attached valve member 88, and the flow of water then passes through the spray handle for discharge from the nozzles defined at the downstream end of the spray. Because of the shape and arrangement of the control 180, only squeeze pressure of the hand is required, as contrasted to finger or thumb pressure required by other controls. It has been found that such an arrangement is less fatiguing for a person using the spray. The flow of water and pressure therefrom depresses the sealing lips 150 and 152 and a full spray is achieved. Upon release of the squeeze control, the spring 176 and the pressure on the upstream side of the valve member 88 operates to cut off flow because the valve member 88 closes with the pressure of the incoming liquid and the tipping valve is restored from the flow position of FIG. 4 to the nonflow position as seen in FIG. 3. With flow cut off, the resilience of lips 150 and 152 restores them to their normal sealing position so that there is no drip from the spray head. Thus the spray provides for precision control thereof.

Referring now to the diverter valve 16 whose details are illustrated in FIGS. 5–7, said diverter valve 16 has an elongated body 200 with a female threaded recess 202 at its upstream end for connection to conduit 20. The opposite end of body 200 carries a tubular stud 204 threaded for connection to stud 22. A transverse cylindrical bore 206 extends through the body 200. A controller 208 is positioned in the transverse bore 206. The valve body defines an entry passageway 210 and there is a first outlet passageway 212 which leads to stud 204 and a second outlet passageway 214 which leads to a transverse study 216 which is adapted for connection to the upstream end of supply hose 14.

Controller 208 is of the shuttle type, whose terminal positions establish the selected operations, and has two spaced large diameter shaft portions 218*a* and 218*b* which are bounded at their respective outer ends by flanges 220*a* and 220*b*. The inner ends of shaft portions 218 each have a groove 222 for an O-ring seal 224. Between shaft portions 218 extends a reduced shaft 226 with an enlarged grooved portion 218*c* centrally thereof carrying an O-ring seal 224. The annular spaces surrounding each section of reduced shaft 226 and positioned between spaced shaft portions provide transfer flow chambers 228.

When the controller is in the FIG. 6 position, flow from conduit 20 enters chamber 228*a* and is directed solely to outlet passageway 214 which supplies water to the spray 10. When the controller is in the FIG. 7 position, flow passes to chamber 228*b* and through both passageway 214 and 212 to supply both the spray 10 and the shower head 24. Abutment of flanges 220*a* or 220*b* against the sides of body 200 operates to properly locate shaft portion 218*c* to direct the liquid flow as desired.

The support bracket 12 of FIGS. 8–11 includes an upright plate 240 formed with a rearwardly extending, wall-engaging peripheral flange 242 and mounting apertures 244 for receiving countersunk wall-mounting screws. Extending forwardly of plate 240 are spaced fingers 246 having upwardly extending retainer tips 248. The shape of plate 240 and the adjacent ends of fingers 246 cooperate to define an arcuate saddle, or recess, 250 between the fingers for accommodating the rounded handle portion of spray 10 when the spray head 11 is seated on fingers 246 between plate 240 and retainer tips 248 as seen in FIG. 1.

In the shower attachment shown in FIG. 12, there is a support bracket 260 for wall mounting with an outwardly extending flange 262. An adjustable spray-holder 264 is shown including a flange 266 arranged in facing relation to flange 262 and arranged for pivoting about the axis of shouldered stem 268 of a finger-actuated, friction-type retainer whose head is indicated at 270. The remainder of spray-holder 264 includes a sleeve 272 with an open lateral segment 274, and an inner periphery that defines an enlarged upper recess 276 and a lower smaller recess 278. The open lateral segment is large enough to pass supply hose 14 therethrough. The upper recess 276 will receive the spray handle 116 and the control 180 when the latter is in the valve-open flow position of FIG. 4, and the lower recess 278 will receive therein the portion of handle 116 upstream of transverse flange 158. Thus, when the spray 10 is in position on holder 264, the control 180 is maintained depressed and a showerlike spray emanates from head 11, with adjustable holder 264 directing the attitude of the spray.

While there has been shown and described a particular embodiment of this invention, it will be obvious to those skilled in the art that various changes and modifications may be made therein without department from the invention and, therefore, it is intended in the appended claims to cover all such changes and modifications as fall within the true spirit and scope of the invention.

What we claim as new and desire to secure by Letters Patent of the United States is:

1. A handle-controlled spray comprising, in combination: an elongated tubular handle, spray-discharge means adjacent one end of said tubular handle, means adjacent the other end of said tubular handle defining an annular upstream-facing, valve seat in general longitudinal alignment with the longitudinal axis of the tubular handle, means for introducing water under pressure into the handle past said valve seat, a valve on said valve seat arranged to normally seat with the said pressure of the water, an elongated control lever carried on the outside of the tubular handle in a region downstream of said valve seat and normally extending at a relatively slight divergence from the handle in the direction going upstream, so as to provide a squeeze-type control, valve-opening means operatively associated between said control lever and valve downstream of the valve seat for effecting selective tipping-type opening of

the valve to provide for selective discharge of spray from said spray-discharge means, and the spray-discharge means including at least one circular series of spray apertures, each series of spray apertures having an adjacent circular wall upstream of the spray apertures, and a circular sealing member with a resilient annular deflectable flange normally biased against said circular wall to normally shutoff flow from the associate series of apertures when the liquid in the tubular handle is not under pressure.

2. A device as in claim 1 wherein the circular series of apertures are arranged in two concentric circles, and a single circular sealing member is provided with two annular deflectable flanges for effecting said shutoff of flow.

3. A handle-controlled spray comprising, in combination: an elongated tubular handle, spray-discharge means adjacent one end of said tubular handle, means adjacent the other end of said tubular handle defining an annular upstream-facing, valve seat in general longitudinal alignment with the longitudinal axis of the tubular handle, means for introducing water under pressure into the handle past said valve seat, a valve on said valve seat arranged to normally seat with the said pressure of the water, an elongated control lever carried on the outside of the tubular handle in a region downstream of said valve seat and normally extending at a relatively slight divergence from the handle in the direction going upstream, so as to provide a squeeze-type control, valve-opening means operatively associated between said control lever and valve downstream of the valve seat for effecting selective tipping-type opening of the valve to provide for selective discharge of spray from said spray-discharge means, said means for introducing water under pressure into the handle including an axially elongated annular body having adjacent its downstream end the valve seat inwardly thereof and attachment means outwardly thereof for screw connection to the tubular handle, and having adjacent its upstream end an inside screw connection adapted for receiving a pressure coupling nut, and an internal sealing seat between said ends adapted to receive a sealing member biased thereagainst by such a pressure coupling nut.

4. A handle-controlled spray comprising, in combination: an elongated tubular handle, spray-discharge means adjacent one end of said tubular handle, means adjacent the other end of said tubular handle defining an annular upstream-facing, valve seat in general longitudinal alignment with the longitudinal axis of the tubular handle, means for introducing water under pressure into the handle past said valve seat, a valve on said valve seat arranged to normally seat with the said pressure of the water, an elongated control lever carried on the outside of the tubular handle in a region downstream of said valve seat and normally extending at a relatively slight divergence from the handle in the direction going upstream, so as to provide a squeeze-type control, valve-opening means operatively associated between said control lever and valve downstream of the valve seat for effecting selective tipping-type opening of the valve to provide for selective discharge of spray from said spray-discharge means, and a mounting bracket means shaped to provide a socket which receives and holds the tubular handle and control lever therefor at an attitude wherein the valve is open, and adjustment means on said mounting bracket for selectively varying the attitude of the spray from the spray-discharging means.

* * * * *