J. LOPATKA.

OSCILLATING CRADLE.

APPLICATION FILED JULY 24, 1919.

1,334,042.

Patented Mar. 16, 1920.

2 SHEETS—SHEET 1.

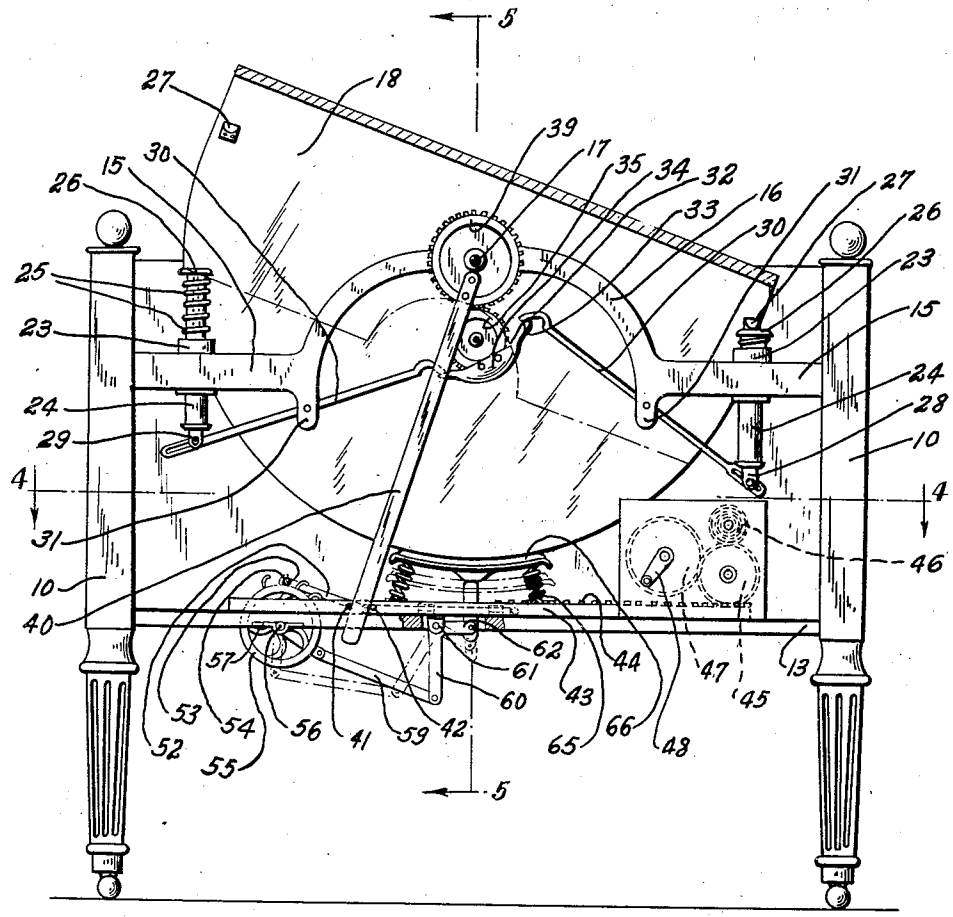

Fig. 1.

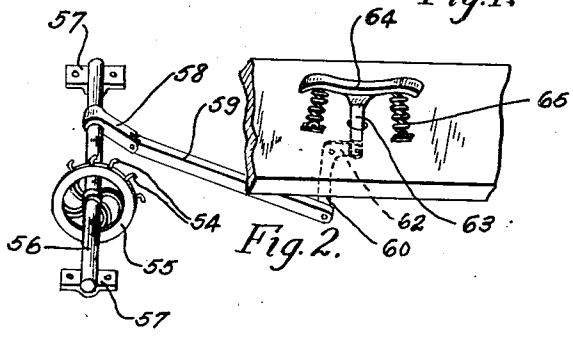

Fig. 2.

INVENTOR

John Lopatka

BY

Adam E. Schatz

ATTORNEY

J. LOPATKA.

OSCILLATING CRADLE.

APPLICATION FILED JULY 24, 1919.

1,334,042.

Patented Mar. 16, 1920.

2 SHEETS—SHEET 2.

Fig. 3.

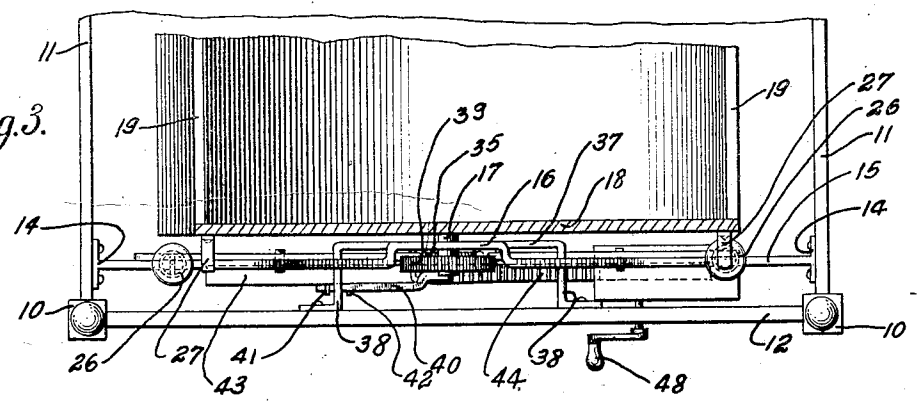

Fig. 4.

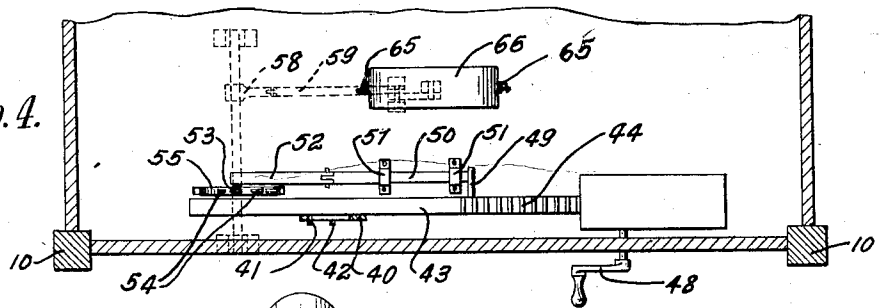

Fig. 5.

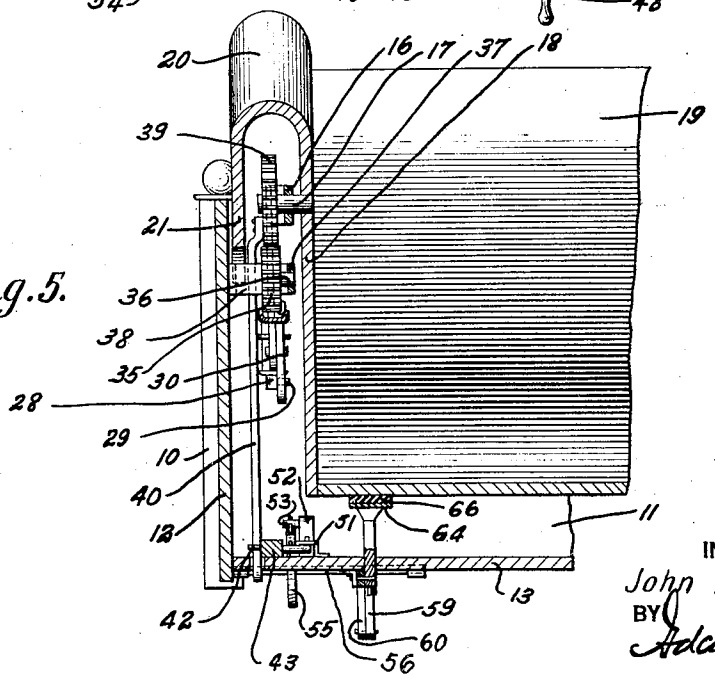

INVENTOR

John Lopatka

BY

Adam E. Schatz

ATTORNEY

UNITED STATES PATENT OFFICE.

JOHN LOPATKA, OF LANUKE, ALBERTA, CANADA, ASSIGNOR OF ONE-HALF TO MARTIN BOROWSKI, OF EDMONTON, CANADA.

OSCILLATING CRADLE.

1,334,042. Specification of Letters Patent. Patented Mar. 16, 1920.

Application filed July 24, 1919. Serial No. 312,947.

To all whom it may concern:

Be it known that I, JOHN LOPATKA, a citizen of Austria, residing at Lanuke, Province of Alberta, and Dominion of Canada, have invented certain new and useful Improvements in Oscillating Cradles, of which the following is a specification.

This invention has for its object the provision of means whereby an infant's cradle may be rocked or oscillated, the reversal of its movements being cushioned so that no shock or jar is transmitted to the occupant of the cradle.

These and other objects, which will become more fully apparent as the description progresses, are attained by the novel construction and combination of parts hereinafter described, and shown in the accompanying drawings, forming a material part of this disclosure, and in which—

Figure 1 is an end elevational view showing a cradle made in accordance with the invention, parts being removed so as to disclose the construction.

Fig. 2 is a fragmentary perspective view showing a braking means used in connection therewith.

Fig. 3 is a fragmentary top plan view of the cradle, its outer portion being partially removed so as to disclose the mechanism.

Fig. 4 is a horizontal sectional view taken on line 4—4 of Fig. 1, and

Fig. 5 is a fragmentary vertical sectional view taken on line 5—5 of Fig. 1.

Referring to the drawings in detail, the numeral 10 designates corner posts connected by side members 11, end walls 12, and a flooring 13.

Secured upon the inner opposite sides of the walls 11, are brackets 14, from which extend horizontal bars 15, joined by raised arcuate elements 16, offset inwardly and forming bearings for the spindles 17 which support the front plates 18 of the cradle structure, the same having concave curved side walls 19, while one of the end walls 18 are curved outwardly at the top 20, terminating in reëntrantly turned elements 21.

Mounted in each of the bars 15 are vertical sleeves 23, and slidably engaged therein are plungers 24, encircled at their upper ends by coiled compression springs 25, the plunger being provided with extending heads 26, contactable with outstanding lugs 27, secured upon the ends 18 of the cradle, near its edges, by which the plungers may be depressed.

Formed in the lower ends of the plungers 24 are forks 28 in which, carried by the pins 29, are slotted levers 30, these levers being pivoted to swing freely in the projections 31, the same extending down from the terminals of the arcuate elements 16, the inner ends of the levers 30, being formed into hooks 32, adapted to engage with projections 33, extending from each end of a guard-like element 34, fixed upon a pinion 35, mounted upon a spindle 36, supported by a bar 37, having bracket like feet 38, fixed to the inner surface of the end walls 12. The teeth of the pinion 35 are engaged with the teeth of a spur gear 39, rigidly secured upon the spindles 17, which support the cradle body on the arcuate elements, the springs 25 being depressed by the bumper lugs 27, and the levers 30 caused to make yielding but forcible contact with the projections 35, causing the cradle body to oscillate.

Secured upon the side of the gear 39 is a lever bar 40, its lower, offset end extending to a distance below the cradle bottom and engaging between a pair of pins 41 and 42, fixed in the sides of a bar 43, slidably engaged over the flooring 13, transversely of the cradle at one end, one end of the bar being provided with rack teeth 43, engageable with a pinion 45, forming one of the gears of a clock-work train and actuated by a coiled flat spring 46, another gear 47, having secured upon it an operating handle 48, by proper manipulation of which the cradle may be rocked due to the oscillations caused in the bar 43 by the pins in engagement with the lever bar 40.

Actuated by an extending pin 49, set in the inner side of the rack bar 43, is a sliding bar 50, guided by brackets 51, fixed upon the flooring 13 and pivotally engaged at the opposite end of the bar 50 is an arm 52, carrying a pin 53, engageable with a plurality of teeth 54, extending from the periphery of a wheel 55, fixed upon a spindle 56, journaled in brackets 57, below the flooring 13.

Secured upon the spindle 56 is an extending crank arm 58 pivotally engaged with a connecting bar 59, attached at its lower opposite end to the longer arm 60 of a bell-crank lever, the shorter arm 62 of which is pivotally engaged with a projec-

tion 63, extending downward from a curved brake element 64, normally drawn downward, due to the pull of a pair of tension springs 65, while the upper surface of the element 64, carries a friction plate 66 adapted to make contact with the curved exterior of the cradle body when rocked to the limit of its movement.

This brake is ordinarily drawn downward by the springs 65 except when pressed upward, due to the movement communicated by the rack bar 43 through the slides, levers and hooked pins of the wheel 55, and connections therebetween to the bell-crank lever, which serves to draw the brake elements away from or out of contact with the surfaces of the cradle body.

In operation, the handle 48 upon being oscillated transmits movement to the rack-bar and then through the bar 40 fixed upon the end of the cradle, causing the same to rock, while the effect of the springs 25, in addition to the clock spring 46 is to render the operation of the cradle relatively easy, cushioning its motion at each end of its oscillation in such manner as will be clearly apparent.

Having thus described my invention what I claim as new and desire to secure by Letters Patent, is—

1. In an oscillating cradle, the combination with a frame, a cradle pivoted therein, a braking means for said cradle body, a clock work mechanism adapted to be manually operated whereby motion is transmitted to said cradle body, and means combined therewith for actuating said brake mechanism at one end of the oscillation of said body.

2. In an oscillating cradle, the combination with a frame, a cradle having an arcuate body pivotally mounted in said frame, means for manually causing the cradle to oscillate, cushioning devices operable upon the extremity of action of said body, and a brake device operable at one end of the limit of motion of said cradle body.

3. In an oscillating cradle, the combination with a rigid frame, an arcuate cradle body pivotally mounted therein, lugs extending outward at the ends of said cradle body, spring actuated plungers adapted to receive said lugs near the limit of oscillation of said cradle body, a bar fixed upon the end of said cradle body, said bar descending downwardly below the flooring thereof, and means for communicating oscillating motion to said bar.

4. In an oscillating cradle, the combination with a rigid rectangular frame, an arcuate body pivotally mounted therein, a pinion mounted on a plane below the pivotal point of said body, a gear fixed on the pivots of said cradle engageable with said pinion, a guard bar secured to said pinion, said guard bar having oppositely disposed extensions, levers engageable with said extensions, spring operated plungers connected with the opposite ends of said levers, and lugs extending from the ends of said cradle body adapted to actuate said spring plungers whereby a reversal of direction of oscillation is obtained at the end of its movement.

In testimony whereof I have affixed my signature.

JOHN LOPATKA.