March 29, 1938. R. H. WINDHAM ET AL 2,112,512

TUFTING MACHINE

Filed June 5, 1937 4 Sheets-Sheet 1

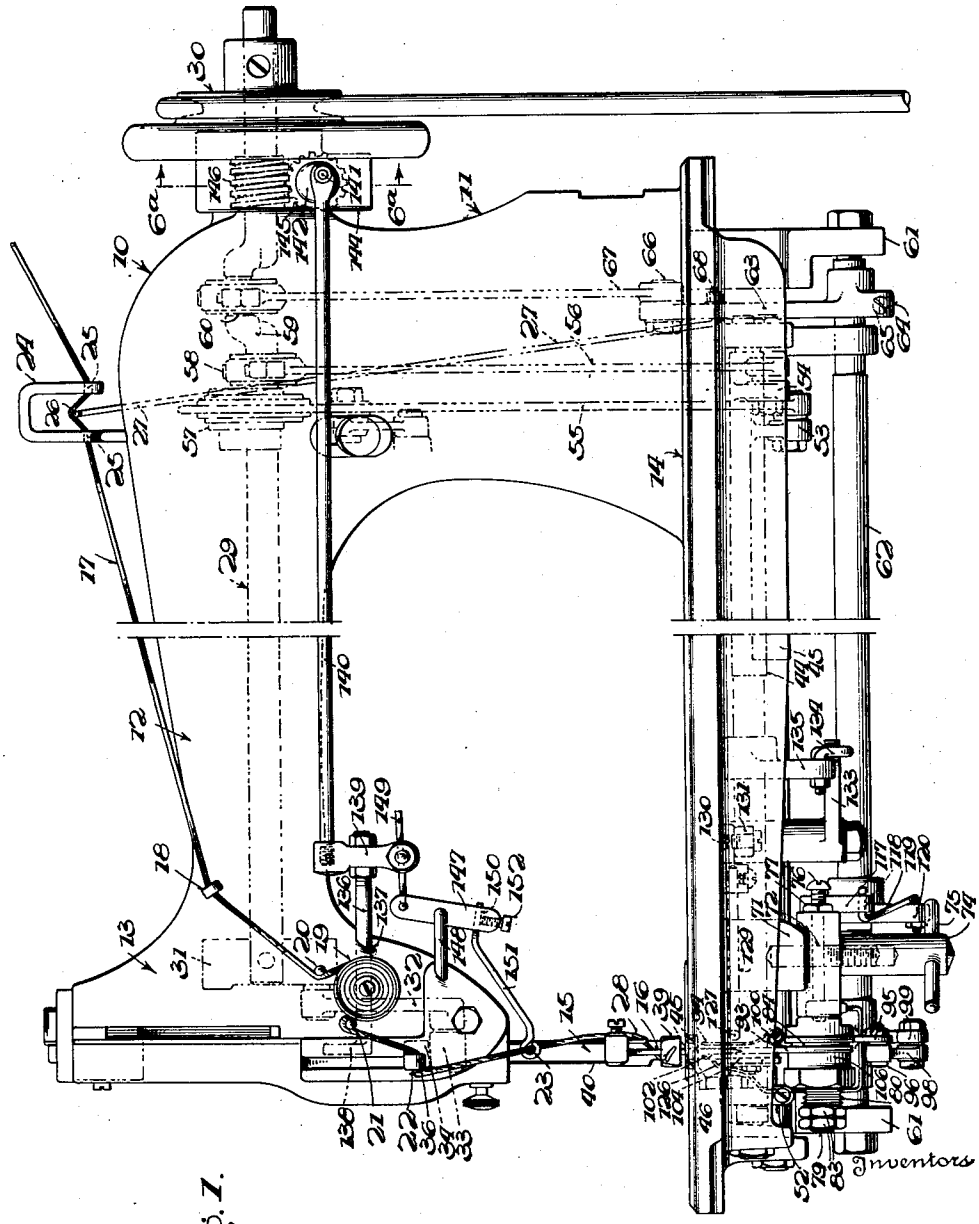

FIG. 1.

Inventors

Roy H. Windham.

Murl A. White.

By B. P. Gibbons

Attorney

March 29, 1938. R. H. WINDHAM ET AL 2,112,512

TUFTING MACHINE

Filed June 5, 1937 4 Sheets-Sheet 2

FIG. 2.

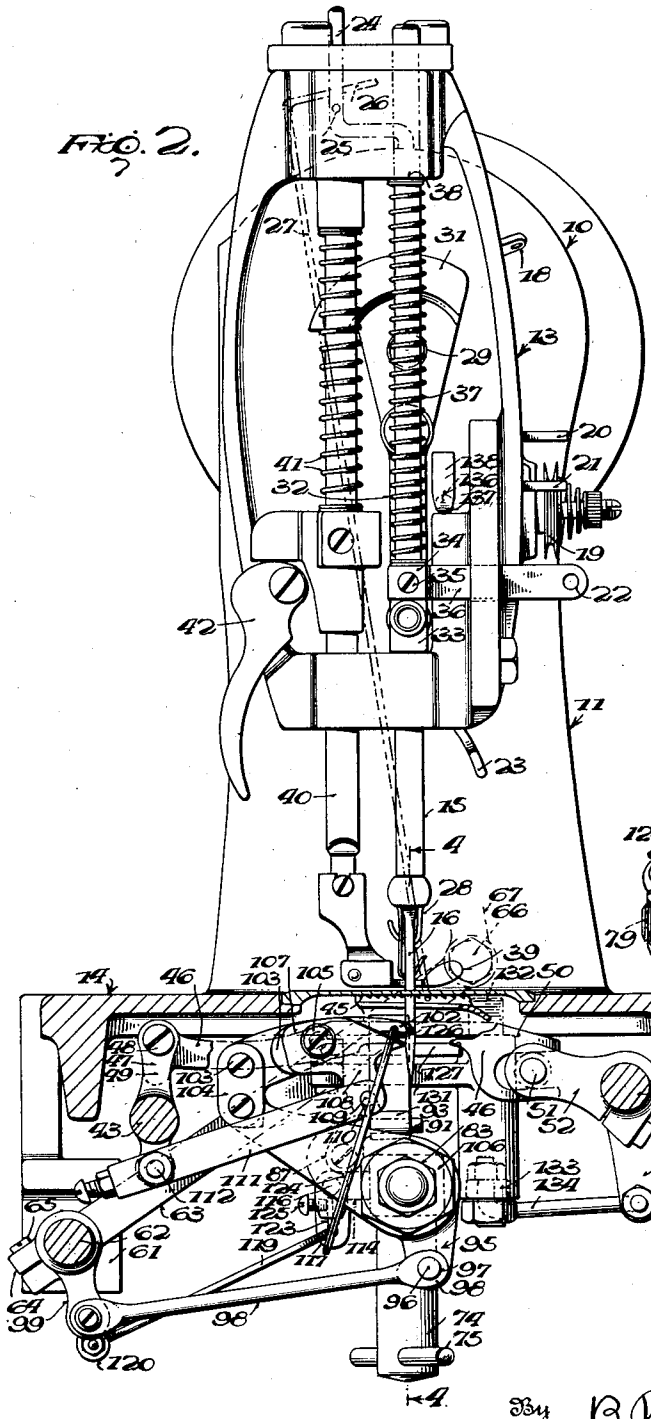

FIG. 3.

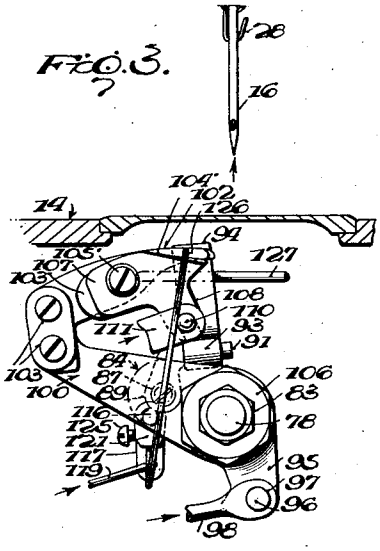

FIG. 4.

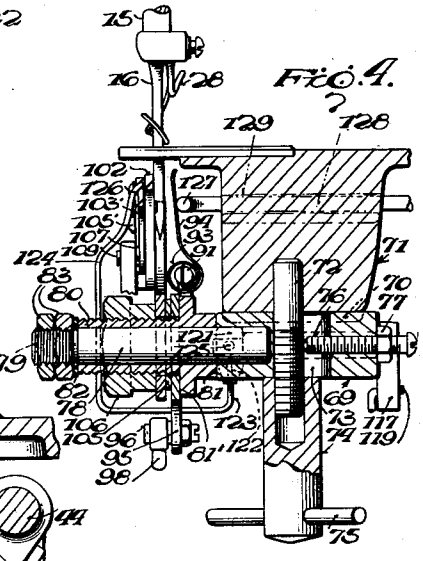

Inventors

Roy H. Windham

Murl A. White

By B. P. Thompson

Attorney

March 29, 1938. R. H. WINDHAM ET AL 2,112,512

TUFTING MACHINE

Filed June 5, 1937 4 Sheets-Sheet 3

FIG. 5.

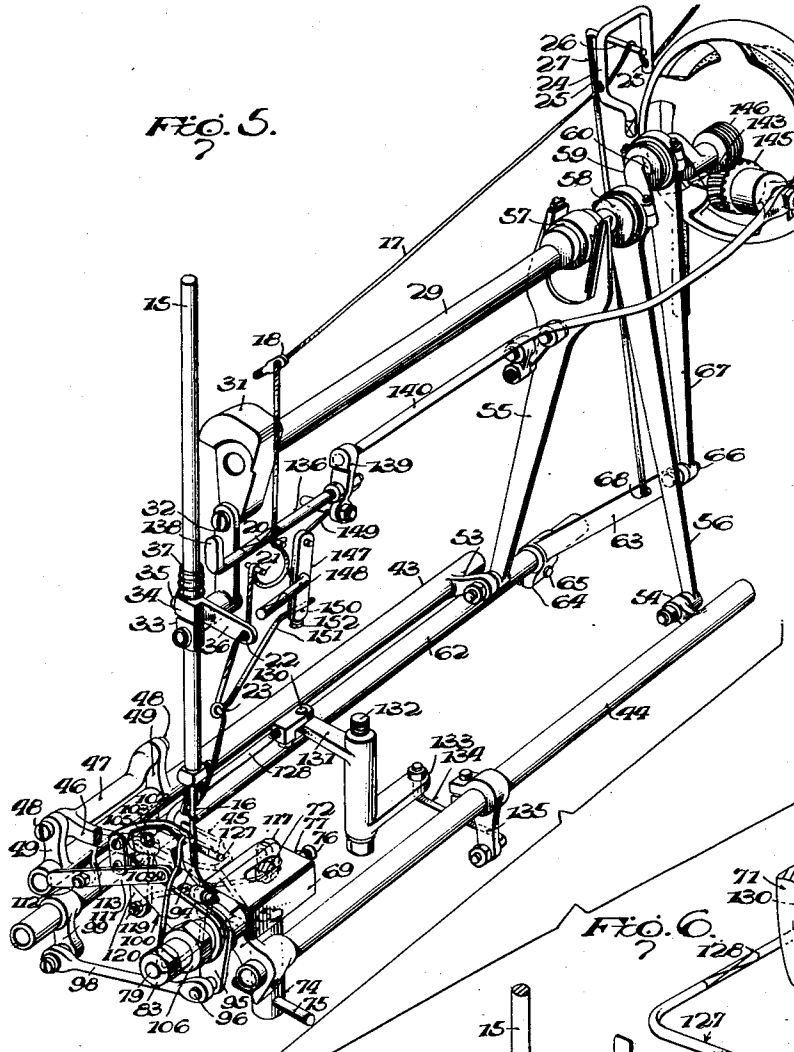

FIG. 6a

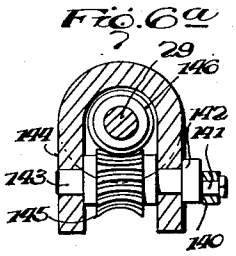

FIG. 6.

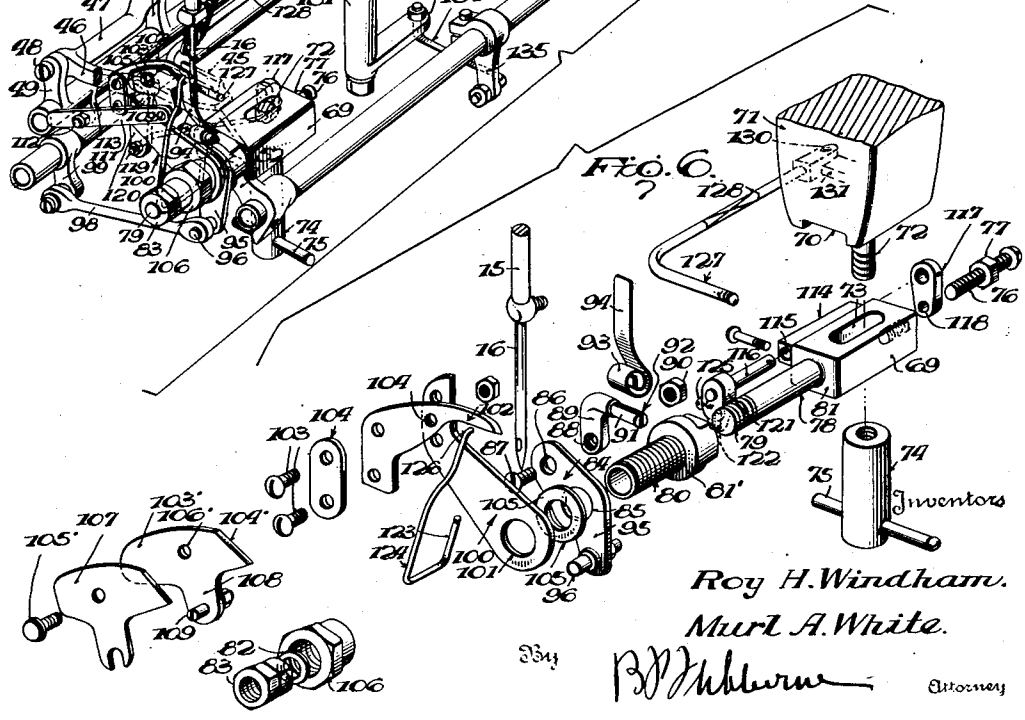

Inventors

Roy H. Windham.

Murl A. White.

By

Attorney

March 29, 1938. R. H. WINDHAM ET AL 2,112,512

TUFTING MACHINE

Filed June 5, 1937 4 Sheets-Sheet 4

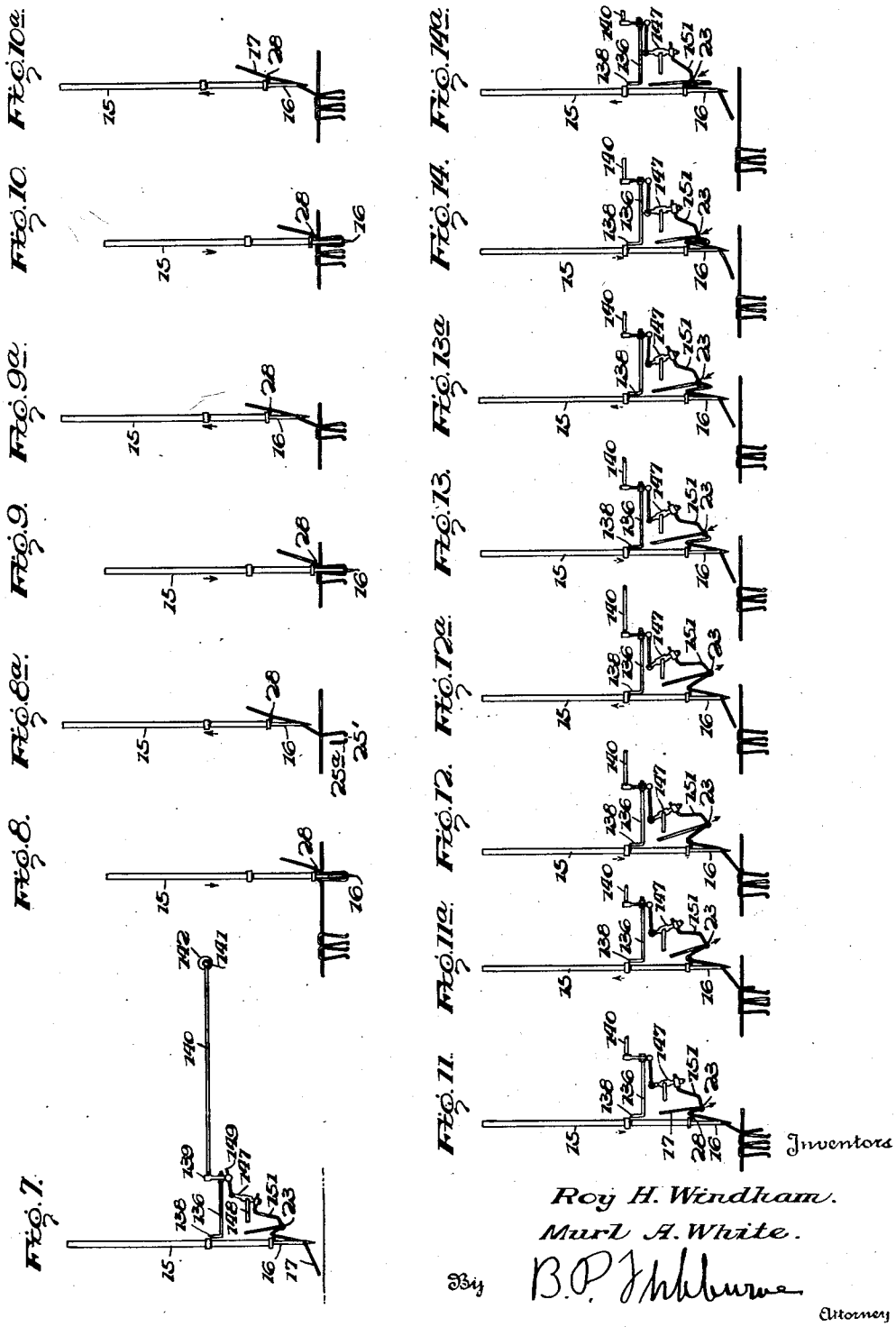

Patented Mar. 29, 1938 2,112,512

UNITED STATES PATENT OFFICE

2,112,512

TUFTING MACHINE

Roy H. Windham and Murl A. White, Sumter, S. C., assignors to Polly Prentiss, Inc., Sumter, S. C., a corporation of South Carolina

Application June 5, 1937, Serial No. 146,685

27 Claims. (Cl. 112—79)

Our invention relates to tufting machines.

An important object of the invention is to provide means for eliminating the accumulation of uncut loop or loops upon the looper, yet permitting of the upward movement of the needle without pulling the yarn from the fabric.

A further object of the invention is to provide a machine of the above mentioned character, wherein the cutting movement or stroke of the cutting element or blade need not be accurately limited.

A further object of the invention is to provide continuously moving means to actuate a cutter or blade mounted upon the looper.

A further object of the invention is to provide a looper having a movable blade or cutter mounted thereon, with a gripper for coaction with the looper.

A further object of the invention is to provide means to move the loop or loops further upon the looper, as the looper has previously moved past the needle and entered the loop.

A further object of the invention is to provide means to cause the needle to idle, during the feeding movement of the work feed means to feed the fabric, for producing spaced tufts or spaced groups of tufts.

A further object of the invention is to provide means to cause the needle to idle, which means is of simplified construction, and is reliable in operation.

A further object of the invention is to provide means for exerting a pull upon the yarn while the needle is idling, to remove the yarn carried by the needle from the fabric.

A further object of the invention is to provide a yarn jerker operating between the tension device and the needle, to pull the yarn through the tension device upon the upstroke of the needle, so that a suitable slack is provided upon the downstroke of the needle to produce the loop.

A further object of the invention is to provide a yarn jerker or puller arranged between the tension device and the yarn spool, to provide a constant slack in the yarn from the spool, whereby the operation of the tension device is not varied by any resistance which might otherwise be offered by the yarn spool.

Other objects and advantages of the invention will be apparent during the course of the following description.

The present application is a continuation in part of our earlier application for Tufting machines, filed February 10, 1937, Serial No. 125,147.

In the accompanying drawings forming a part of this application and in which like numerals are employed to designate like parts throughout the same,

Figure 1 is a side elevation of a tufting machine embodying our invention,

Figure 2 is an end elevation of the same, the head plate being removed,

Figure 3 is a side elevation of the looper, and associated elements, with the needle raised,

Figure 4 is a vertical section taken on line 4—4 of Figure 2,

Figure 5 is a perspective view of the tuft forming means, needle operating means and associated elements,

Figure 6 is an exploded perspective view of the looper, gripper and cutter and associated elements, constituting a removable unit,

Figure 6*a* is a section taken on 6*a*—6*a* of Figure 1,

Figure 7 is a side elevation, partly diagrammatic, of the yarn pulling means and associated elements,

Figure 8 is a diagrammatic view showing the downward stroke of the needle during the first cycle of operation,

Figure 8*a* is a similar view showing the upstroke of the needle during the first cycle,

Figure 9 is a similar view showing the downstroke of the needle during the second cycle,

Figure 9*a* is a similar view showing the upstroke of the needle during the second cycle,

Figure 10 is a similar view showing the downstroke of the needle during the third cycle,

Figure 10*a* is a similar view showing the upstroke of the needle during the third cycle,

Figure 11 is a similar view showing the needle, held elevated, during the pulling action of the pulling element and before the fabric is fed for the next step in the 4th cycle,

Figure 11*a* is a similar view with the needle held elevated and the pulling element pulling the yarn and the fabric fed the next step during the fourth cycle,

Figure 12 is a similar view showing the needle held elevated and the pulling element further pulling the yarn, during the fifth cycle,

Figure 12*a* is a similar view showing the needle held elevated, the fabric fed the next step and the pulling element further pulling upon the yarn which is separated from the fabric,

Figure 13 is a similar view showing the needle held elevated in the sixth cycle, before the work is fed the next step, and the pulling element moving in an opposite direction to produce a slack in the yarn,

Figure 13*a* is a similar view showing the needle held elevated in the sixth cycle, the work fed another step and the pulling element producing a further slack in the yarn,

Figure 14 is a similar view, showing the needle held elevated during the seventh cycle, before the work is fed for the next step, and the pulling element moving to produce a further slack in the yarn, and,

Figure 14*a* is a similar view showing the needle

held elevated in the seventh cycle, the fabric fed another step, and the pulling element producing a further slack in the yarn.

In the drawings, wherein for the purpose of illustration is shown a preferred embodiment of our invention, the numeral 10 designates the sewing machine as a whole, of any well known or preferred type, such as the ordinary Singer sewing machine, comprising a stock 11, arm 12 and head 13. The stock is mounted upon a flat base 14. The head 13 is provided with the usual vertical reciprocatory needle bar 15 having a needle 16 clamped therein, to move therewith, at all times, during the sewing operation of the machine. This needle has the usual eye at its lower pointed end for receiving the tufting yarn or thread 17, passed through a guide 18, through a tension device 19, over stationary guide pins 20 and 21, through the eye 22 of a slack producing jerker, the eye 23 of a yarn pulling device, and through the eye of the needle. Attention is called to the fact that the eye 22 is arranged between the tension device 19 and the needle. The yarn also passes through a slack producing device or jerker, including an inverted U-shaped bracket 24, rigidly secured to the arm 12, and having apertures 25 through which the yarn slidably passes. The yarn is fed from the usual cone spool (not shown) and which is ordinarily not supported upon the head. Engaging beneath the yarn within the bracket 24 is a horizontal head 26, carried by a reciprocatory rod 27 guided in an aperture formed in the top of the arm 12, and operated by means to be described. When the head 26 rises, it travels above the apertures 25, and thereby pulls the yarn from the spool, and provides a slack when the rod 27 descends. The purpose of the head 26 and associated elements is to maintain a constant slack in the yarn fed from the spool, so that the tension of the tension device 19 is not varied by any resistance that the spool might offer. The needle bar also carries an eye 28 at its lower end. The eye 28 is at substantially the same elevation as the eye 23, when the needle bar is raised.

The machine embodies the usual drive shaft 29, suitably journaled in the arm 12, and horizontally arranged, as shown, and driven by a grooved pulley 30, which may be manually or power driven. At its forward end the drive shaft 29 is provided with a crank disc 31 rigidly secured thereto, and having pivotal connection with a link 32. This link is pivotally connected with a sleeve 33. The sleeve 33 is a part of the original sewing machine. This sleeve is ordinarily clamped to the needle bar, to reciprocate therewith, by means of a set screw. In accordance with the present invention, this set screw is removed and the sleeve 33 is therefore slidably mounted upon the needle bar 15. The sleeve is capable of raising the needle bar, but the needle bar may be held in the raised position when the sleeve 33 is lowered, as will be explained. Arranged above the sleeve 33 is a block 34, rigidly clamped to the needle bar by a set screw 35. Rigidly secured to the block 34 and preferably formed integral therewith is a horizontal arm 36, included in the yarn jerking device and carrying the aperture 22. The block 34 is engaged by a compressible coil spring 37, surrounding the needle bar 15, and also engaging the end wall 38 of the head 13, as shown. The spring 37 serves to move the needle bar downwardly while the sleeve 33 serves to raise the needle bar, but the needle bar is permanently slidable within the sleeve 33.

The machine further comprises a presser foot 39, of the usual construction, clamped to a reciprocatory presser bar 40, moved downwardly by a spring 41, and raised by a finger engaging lever 42 or by any other suitable means.

Arranged below the base 14 are horizontal rock shafts 43 and 44, which are held by suitable bearings. The sewing machine further comprises work feed means, to advance the work from the operator, including work feed dogs 45, operating through a suitable opening in the base or through the throat plate, as is well known. These feed dogs are rigidly mounted upon a rigid dog supporting bar or link 46. At one end, this bar or link is rigidly connected with a transverse head 47, pivoted at 48, with cranks 49, in turn rigidly mounted upon the rock shaft 43. At its opposite end, the rigid bar or link 46 is provided with a fork 50, receiving a roller 51, pivotally mounted upon a crank 52, in turn rigidly mounted upon the rock shaft 44. The rock shafts therefore constitute the operating means for the work feed mechanism. These rock shafts extend longitudinally of the drive shaft 29 and are parallel therewith. The rock shafts 43 and 44 are provided adjacent to the stock 11 with cranks 53 and 54 respectively. The cranks 53 and 54 are pivotally connected with connecting rods 55 and 56 respectively, which are actuated by cams 57 and 58 respectively, in turn carried and driven by the drive shaft 29. It might be stated at this point that the rock shaft 43 serves to move the dog carrying bar or link 46 longitudinally, while the rock shaft 44 serves to raise and lower the same. The drive shaft 29 is also provided with a crank 59, including a crank pin 60. The foregoing description is that of the ordinary Singer sewing machine, with the exception that the needle bar is reciprocated in a different manner, as explained.

Rigidly attached to the base 14 adjacent to one longitudinal edge thereof and depending from said such base are brackets 61, having bearings for holding an auxiliary rock shaft 62, arranged near and parallel with the rock shaft 43. This auxiliary rock shaft carries a long crank arm 63, equipped with a collar 64, adapted to be clamped to the rock shaft 62 by a set screw 65 or the like. Pivotally connected with the crank arm 63, at 66, is a connecting rod or link 67, the upper end of which is pivotally connected with the crank pin 60, as shown. The reciprocatory rod 27 is pivotally connected with the crank arm 63 at 68.

We provide a looper, gripper, cutter and loop shifting arm which are removable as a unit. This unit comprises a block 69, adjustably mounted in a groove 70, formed in a stationary lug 71, arranged beneath the bed 14. This lug is provided with a depending screw threaded stud 72, rigidly secured thereto. This stud passes through an elongated opening 73, formed in the block 69, and is engaged by a removable nut 74, equipped with a handle 75, for convenient turning. When the proper position of the block 69 is found, an adjusting bolt 76 is screwed up until it lightly contacts with the stud 72 and the bolt 76 may then be locked in place by the lock nut 77. The bolt 76 does not interfere with the removal of the block 69 from the stud 72. Rigidly attached to one end of the block 69 is a horizontal shaft 78, having a reduced screw threaded end 79. Pivotally mounted on this shaft is a sleeve 80, engaging between shoulder 81 and washer 82, held in place by nuts 83, having screw threaded engagement with the reduced extension 79. Mounted upon the sleeve 80, adjacent to the shoulder 81, is a gripper, comprising an arm or body portion 84, having an opening 85, to receive the sleeve 80.

This arm has an opening 86 to receive a bolt 87 passing through an opening 88 in a second arm 89, and carrying a nut 90. The arm 89 may be angularly adjusted with respect to the arm 84 and locked thereto in the selected adjusted position. The arm 84 carries a shaft 91, rigidly secured thereto, and this shaft has a slot 92 to receive the end of a coil 93 formed upon a resilient gripper element 94. The arm 84 of the gripper is provided with a depending crank 95, carrying a stud 96, which is readily removable from within the aperture 97 formed in a link 98, which is pivotally connected with a depending crank 99, rigidly mounted upon the auxiliary rock shaft 62. Arranged upon and near one side of the gripper, is a looper member including an arm 100, having an opening 101 to receive the sleeve 80. The arm 100 has the looper element 102 rigidly attached to its upper end, by means of screws 103 and a plate 104, and the looper element is preferably detachable from the arm 100. The resilient gripper element 94 is arranged upon the same side of the looper element 102 with the needle. A washer 105 is arranged between the arms 84 and 100, and a nut 106 has screw threaded engagement with the sleeve 80, and serves to clamp the arm 100 and the arm 84 together. The arm 100 may be angularly adjusted with respect to the arm 84, and when the nut 106 clamps the arm 100 to the arm 84, the gripper and looper swing as a unit. Since the gripper is swung by the link 98 and associated elements it will be seen that the looper is swung by the gripper, and the gripper and looper swung in unison, but this swinging movement does not cause the resilient gripping element 94 to be shifted into engagement with the looper element 102. The numeral 103' designates a blade or cutter, having an inclined cutting edge 104', to coact with the looper element 102, and sever all loop or loops thereon, and for this reason the looper element 102 need not have a down turned or hooked end. The blade or cutter 103' is pivoted upon the looper element 102 by means of a bolt 105' engaging within an opening 106' and this bolt also passes through a bowed leaf spring 107, which serves to retain the blade or cutter 103' in firm engagement with the adjacent face of the looper element. The blade or cutter has a depending crank 108 carrying a stud 109, which is readily removable from within an aperture 110, formed in a link 111, pivoted at 112, with a depending crank 113, rigidly secured to the rock shaft 43. The pin or pivot 112 is continuously moving or rocking during the operation of the machine, and causes the cutter or blade 103' to turn upon its pivot and have a shearing action with the looper element 102 to shear all loops upon the looper element. Rigidly attached to one side of the block 69 is a small block 114, having a horizontal opening 115, to receive a rock shaft 116, having a crank 117 rigidly secured to one end thereof. This crank has an aperture 118 to readily removably receive the transverse end of a link 119, pivotally connected with a crank 120, mounted upon the auxiliary rock shaft 62. The opposite end of the rock shaft 116 is provided with a head 121 rigidly secured thereto and having an opening 122, receiving the end 123 of a loop shifting finger 124. The end 123 is clamped within the opening 122 by a set screw 125. The arm 124 is generally U-shaped, and extends below and about the gripper and looper and has its upper end bent laterally toward the looper element 102 to provide a portion 126, which travels near and above the looper element and projects over the same, to engage that side of the loop next to the cutter. It might be stated that the loop shifting arm or element is not employed to transfer loops from the needle to the looper, and this finger is not thrown into action until after the looper element has moved toward the needle and entered the loop and has started upon its movement from the needle. The function of the loop shifting arm 124 is to shift that side of the loop next to the cutter further rearwardly upon the looper element, upon the starting of a new group of loops and when that side of the loop next to the cutter has been pulled from the fabric. Ordinarily this leaves that side of the loop next to the cutter in the form of a short portion, which should be severed, and this short portion sometimes moves from between the looper element and cutter or blade, but the loop shifting finger 124 feeds this short portion rearwardly, preventing the improper displacement of the short portion, before it is cut off. The finger 124 will also act upon all loops as they are held by the looper element, but this serves no useful purpose.

The resilient gripper 94 is tensioned to automatically move laterally from the looper element 102, to provide a suitable space for the descending needle, and means are provided to shift the resilient gripper element toward the looper element, to clamp the loops thereon, during the swinging movement of the looper element. This means comprises a presser head 127, arranged to engage that side of the resilient gripper element 94 remote from the needle. This head is rigidly secured to a reciprocatory rod 128, slidably mounted in an opening 129, formed in the lug 71, and the rod 128 is pivotally connected at 130 with one arm 131 of a horizontally swinging bell crank lever, pivoted upon a vertical pin 132. The other arm 133 of this bell crank lever is pivotally connected with a link 134, in turn pivotally connected with a crank 135, mounted upon the rock shaft 44.

The coaction of the looper, gripper, cutter and loop shifting arm or element is as follows:

As the needle 16 descends, the looper member swings toward the needle, and when the needle reaches or approaches its lowermost position, the looper element 102 has entered the loop. As the needle starts to rise and about the time that it has passed slightly above the looper element, the presser head 127 has moved toward the resilient gripper 94 sufficiently to cause this resilient gripper to grip the loop against the side of the looper element 102, as the looper element is traveling towards its rear position from the needle. The gripper element therefore grips the loop to the looper element as the needle rises and this prevents the yarn from being pulled out of the fabric. When the looper element reaches its rearmost position from the needle the resilient gripper 94 begins to open, as the presser head 127 is now traveling from the looper element and by the time the looper element has again moved forwardly to extend across the path of travel of the needle, the gripper element 94 will be completely opened, so that it will not contact with the needle when it descends. When the looper element 102 is moving rearwardly from the needle, as explained, the movement of the pivot 112 and link 111 causes the blade or cutter 103 to turn upon its pivot 105 and the loop upon the looper is severed when the looper element reaches or approaches its rearmost position. The loop shifting finger or element 124 swings simultaneously counter-clock-wise with the looper mem-

ber and simultaneously clock-wise with the looper member but the arm 124 travels for about twice the distance of the looper member. This positions the free end of the arm 124 well in advance of the looper element 102 when the needle has descended. It is thus seen that when the looper element has entered the loop produced by the needle in the lowermost position, the free end of the arm 124 is well in advance of the looper element and loop. The looper element has thus already entered into the loop and received the loop before the arm 124 has started its rearward movement from the needle. Further, the looper element has moved rearwardly a substantial distance before the arm 124 has moved rearwardly sufficiently to engage the loop thereon and shift the same rearwardly. It is thus apparent that the arm 124 does not serve to pass the loop upon the free end of the looper, as the loop is already thereon, but simply to work the loop further back upon the looper element.

Means are provided to cause the needle to idle at intervals for producing spaced tufts or spaced groups of tufts. This means comprises a reciprocatory bolt 136, sliding in an opening 137, formed in the head 13. At its forward end this bolt is provided with an upturned head 138, to engage beneath the arm 36, when the bolt 136 is projected forwardly into the path of travel of this arm. This bolt is longitudinally adjustably connected with a coupling 139, the upper end of which is rigidly connected with a rod 140. The rod 140 is pivotally connected with a pin or pivot element 141, eccentrically carried by a rotary element or wheel 142. This rotary element is rigidly mounted upon a shaft 143, journaled in bearings formed in a housing 144. The shaft 143 carries a worm wheel 145, rigidly secured thereto and this worm wheel engages a worm wheel 146, rigidly secured to the drive shaft 29. The worm wheel 146 makes seven rotations to one rotation of the worm wheel 145. It is thus seen that the movement of the pin 141 eccentric with the rotating wheel 142 will effect a longitudinal movement of the bar or rod 140, which will in turn move the bolt 136 into and out of the path of travel of the arm 36. The movement of the bolt 136 is relatively slight and the starting point of the bolt with respect to the arm 36 may be regulated by longitudinally adjusting the bolt with respect to the coupling 139.

A yarn pulling device is provided, to pull the yarn carried by the needle from the fabric, when the needle is idling, comprising a lever 147, pivotally mounted between its ends upon a fixed bar or rod 148, rigidly attached to the head 13. The lever 147 is pivotally connected at its upper end with a link 149 which is adjustably clamped to the coupling 139, the link 149 being resilient to compensate for any slight arcuate movement of the upper end of the lever 147. The lever 147 is provided near its lower end with a transverse opening 150 to receive the end of an arm 151, clamped therein by a set screw 152. The arm 151 carries the eye 23.

The operation of the machine is as follows:

In the present embodiment of our invention, and for the purpose of illustration only, the drive shaft 29 has a gear ratio with the rotatable element or wheel 142 so that the element 142 makes one complete revolution when the drive shaft makes seven complete revolutions. The needle makes three cycles of operation during the sewing period and is held elevated or idle during four cycles of operation, the work being fed one step during each cycle of operation, when the needle is elevated.

The cycles of operation of the needle during the sewing period is illustrated in Figures 8, 8*a*, 9, 9*a*, 10, and 10*a*. Figures 8 and 8*a* show the first cycle of operation. The needle moves downwardly on the first stroke, Figure 8, and forms the loop upon the lower side of the fabric, and about the time that the needle starts upon its up stroke the looper enters the loop but the gripper does not as yet grip the loop. Upon the beginning of the up stroke of the needle the loop slides about the looper and that side of the loop next to the cutter is pulled down out of the fabric, and by the time the needle moves upwardly above the looper and gripper, the gripper grips the opposite side of the loop to the looper, Figure 8*a*. The looper is now moving from the needle and the cutter severs the yarn at 25' cutting off a short tail 25*a*. The needle now reaches the uppermost position, Figure 8*a*, and the first cycle is completed, and the work is fed one step. On the second cycle, the needle descends, Figure 9, to form the loop, and the loop is gripped and severed, in the same manner and when the needle reaches the uppermost position the second cycle is completed and the work fed another step. During the third cycle, the needle descends, Figure 10, forming and severing another loop and again rises to the uppermost position to complete the third cycle, and the work is fed another step, Figure 10*a*. The idling period starts after the completion of the third cycle and continues throughout the 4th, 5th, 6th, and 7th cycles. Figure 11 shows the needle held in the elevated position against the down stroke while the eye 23 is starting to move downwardly and from the eye 28 which is now held at substantially the same elevation with the eye 23. This movement of the yarn pulling eye has caused the trailing side of the trailing loop to be partly pulled from the fabric, and when the work is fed in the next step, Figure 11*a*, the feeding movement of the fabric and the continued pulling action of the eye 23 further pulls the yarn extending from the needle from the fabric. During the fifth cycle of operation the continued pulling movement of the eye 23 further pulls the yarn extending from the needle from the fabric and Figure 12*a* shows the completion of the fifth cycle and the feeding of the work for another step, and this feeding of the work combined with the continued pulling action of the eye 23 completely removes the yarn from the fabric. This leaves a portion of the yarn carried by the needle and extending beyond the same of sufficient length to prevent the yarn from pulling out of the needle and to properly form the first loop, when the first cycle of operation is reached. During the sixth cycle the work is fed another step, but the eye 23 is now traveling in a reverse direction, Figures 13 and 13*a*, and the same operation occurs during the seventh cycle, with the result that a slack is accumulated in the yarn between the eyes 23 and 28. After the completion of the seventh cycle, the needle is in the uppermost position and is then released to descend upon the down stroke, Figure 8, to repeat the first cycle.

As clearly shown in Figure 8, both sides of the loop are in the fabric. As the needle ascends, Figure 8*a*, the side of the loop next to the cutter is pulled out of the fabric and slips around the lower edge of the looper, this slipping action stopping when the needle rises sufficiently so that the gripper grips the side of the loop next

to the gripper against the looper. The short side of the loop next to the cutter or blade should be cut by the cutter, as the looper approaches its rearmost position, but it sometimes happens that this short side will work or bend toward the free end of the looper to such an extent that the cutter may not engage the same and fail to sever the short side at the point 25'. To prevent this from occurring, the arm 124 moves from the needle and simultaneously counter-clock-wise with the looper but faster than the looper and engages this short side of the loop next to the cutter, shifting it rearwardly and upwardly so that it will be positioned to be cut by the cutter. The arm 124 will thus push the short side of the loop well up into the space between the then opened cutter or blade and the looper, whereby this short side is cut by the blade.

It is to be understood that the form of our invention herewith shown and described is to be taken as a preferred example of the same and that various changes in the shape, size, and arrangement of parts may be resorted to without departing from the spirit of our invention or the scope of the subjoined claims.

Having thus described our invention, we claim:

1. In a tufting machine, a movable needle to carry the yarn through the fabric, a movable looper to enter the loop produced by the needle, gripping means arranged with respect to the looper to provide a space for a part of the loop and to press such part against the looper to hold the part thereon, means mounted on the looper to sever the loop and work feed mechanism for coaction with the needle.

2. In a tufting machine, a movable needle to carry the yarn through the fabric, a movable looper to enter the loop produced by the needle, gripping means acting against the looper to hold the yarn thereon, a cutter pivoted upon the looper to sever the loop and work feed mechanism for coaction with the needle.

3. In a tufting machine, a reciprocatory needle to carry the yarn through the fabric, work feed mechanism, a reciprocatory looper to move in the direction of the line of work and to enter the loop produced by the needle, a gripper arranged upon one side of the looper to grip the yarn against the looper and reciprocating with the looper, a cutter arranged upon the opposite side of the looper and pivotally mounted thereon, means to operate the gripper, and means to effect a relative movement between the looper and pivoted cutter during a reciprocation of the looper.

4. In a tufting machine, a needle, means to reciprocate the needle and to cause the same to idle, work feed mechanism, a movable looper to coact with the needle, means to sever the loop upon the looper, and automatic means other than the eye of the needle to exert a pulling action upon the yarn carried by the needle to aid in removing the same from the fabric.

5. In a tufting machine, a needle, means to reciprocate the needle, a movable looper to coact with the needle, a movable cutter to sever the loop upon the looper, a movable gripper to grip the yarn against the looper, said looper and cutter and gripper being removable as a unit, and means to actuate the looper and cutter and gripper in timed order.

6. In a tufting machine, a needle, means to reciprocate the needle, work feed mechanism to coact with the needle, a removable support, a looper and a cutter and a gripper and a loop shifting finger arranged in cooperative relation to each other and all carried by the removable support so that these elements are removable as a unit, and means to actuate the looper and cutter and gripper and finger.

7. In a tufting machine, a needle, means to reciprocate the needle, work feed means to coact with the needle, a movable looper, means to move the looper so that it enters the loop formed by the needle when the needle passes through the fabric and the loop is accordingly transferred to the looper, means to engage the loop after it is transferred to the looper and shift the same upon the looper from the needle, and means to cut the loop upon the looper.

8. In a tufting machine, a needle, means to reciprocate the needle, work feed means to coact with the needle, a movable looper, means to move the looper so that it enters the loop formed by the needle when the needle passes through the fabric and the loop is accordingly transferred to the looper, means to grip that side of the loop next to the needle against the looper, means to engage the other side of the loop remote from the needle after the loop is transferred to the looper and shift such other side upon the looper from the needle, and means to sever such other side of the loop.

9. In a tufting machine, a needle, means to reciprocate the needle, work feed means to coact with the needle, a movable looper having its free end to enter the loop produced by the needle, means to move the looper so that its free end enters the loop formed by the needle when the needle passes through the fabric and the loop is accordingly transferred to the looper, a gripper arranged upon that side of the looper next to the needle to grip one side of the loop to the looper, a cutter pivotally mounted upon the opposite side of the looper to cut the other side of the loop, and means to engage such other side of the loop after the loop is transferred to the looper and to shift the same upon the looper into the space between the looper and cutter.

10. In a tufting machine, a needle, means to reciprocate the needle, a reciprocatory gripper, means to positively drive the gripper, a reciprocatory looper for coaction with the needle and gripper, adjustable means connecting the looper with the gripper so that the looper may be adjustably arranged with respect to the gripper, and means to actuate the gripper so that it will grip the yarn to the looper during the travel of the looper.

11. In a tufting machine, a needle, means to reciprocate the needle, a reciprocatory looper to coact with the needle, a gripper arranged upon one side of the looper and traveling with the looper during its reciprocation, said gripper including angularly adjustable parts, means to actuate the gripper to cause the same to grip the yarn to one side of the looper, and means to sever the loop upon the looper.

12. In a tufting machine, a needle, means to reciprocate the needle, a reciprocatory looper to coact with the needle, a reciprocatory gripper to coact with the looper, said gripper including an arm and a resilient gripper element having a coiled portion attached to the arm, means to shift the resilient gripper element with relation to the looper to grip the yarn upon the looper, and means to sever the loop upon the looper.

13. In a tufting machine, a needle, means to reciprocate the needle, means to cause the needle to idle, means to exert a pulling action upon the

yarn to aid in withdrawing the same from the fabric and being actuated by the needle idling causing means, means coacting with the needle to produce loops, and means to sever the loops.

14. In a tufting machine, a reciprocatory needle to carry the yarn through the fabric and produce a loop, a looper to enter the loop produced by the needle, a gripping element to press a portion of the loop against the looper, means separate from the looper to actuate the gripping element, and means to sever the loop upon the looper.

15. In a tufting machine, a reciprocatory needle to carry the yarn through the fabric and produce a loop, a movable looper to enter the loop, a gripper separately mounted from the looper, means to move the gripper so that it presses a portion of the loop against the looper, and means to sever the loop upon the looper.

16. In a tufting machine, a reciprocatory needle to carry the yarn through the fabric and produce a loop, a movable looper to enter the loop, a gripper to press a portion of the loop against one side of the looper, and a movable cutter operating upon the opposite side of the looper to sever the loop.

17. In a tufting machine, a reciprocatory needle to carry the yarn through the fabric and produce a loop, work feed means to cooperate with the needle, a reciprocatory looper adapted to enter the loop produced by the needle and facing in an opposite direction to the feeding movement of the work, a gripper to reciprocate with the looper, means to actuate the gripper so that it presses a portion of the loop against the looper, and means coacting with the looper to sever the loop.

18. In a tufting machine, a reciprocatory needle to carry the yarn through the fabric and produce a loop, work feed means to cooperate with the needle, a reciprocatory looper to engage with the loop produced by the needle, a reciprocatory gripper arranged near the looper, means to cause the looper and gripper to move together in one direction, separate means to actuate the gripper so that it presses a portion of the loop against the looper, and means to cut the loop.

19. In a tufting machine, a needle, means to operate the needle to cause the same to pass through the fabric and produce a loop, work feed means for coaction with the needle, a looper, means to actuate the looper so that it engages the loop formed by the needle, a gripper, and means to actuate the gripper so that it presses a part of the loop against the looper.

20. In a tufting machine, a movable needle to carry the yarn through the fabric, a looper to receive thereon the loop produced by the needle, gripping means arranged with respect to the looper to provide a space for receiving a part of the loop and movable toward the looper for clamping said part between the gripping means and the looper and movable from the looper to release such part, means to sever the loop upon the looper, and work feed means for coaction with the needle.

21. In a tufting machine, a movable needle to carry the yarn through the fabric and produce a loop, a looper to receive thereon the loop produced by the needle, a gripper arranged with respect to the looper to provide a space for receiving a part of the loop, the looper and gripper serving as opposed jaws of a clamp for holding engagement with such part, means to sever the loop upon the looper, and work feed means to coact with the needle.

22. In a tufting machine, a movable needle to pass the yarn through the fabric, a looper to enter the loop produced by the needle, gripping means arranged with respect to the looper to provide a space between them for receiving a part of the loop, means for operating the gripping means so that it presses said part in said space against the looper for holding such part and to also operate the gripping means for releasing such part, and work feed means for coaction with the needle.

23. In a tufting machine, a reciprocatory needle to carry the yarn through the fabric and produce a loop, a reciprocatory looper movable toward the needle to enter the loop, a reciprocatory gripper arranged with respect to the looper to provide a space between them for receiving a part of the loop, means to reciprocate the looper and gripper in directions which are generally parallel, means to move the gripper toward the looper when the looper is traveling from the needle to cause the gripper to press the part of the loop in the space against the looper, means to sever the loop upon the looper, and work feed means coacting with the needle.

24. In a tufting machine, a reciprocatory needle to carry the yarn through the fabric to produce a loop, a looper to enter the loop, a gripper arranged near the looper, means to reciprocate the looper and gripper in generally parallel planes, means to operate the gripper so that it is spaced from the looper to provide a space for a part of the loop when the looper enters the loop and is subsequently moved in a direction transversely of the reciprocatory movement of the looper to cause the gripper to clamp the part of the loop in said space against the looper, means to sever the loop upon the looper, and work feed means coacting with the needle.

25. In a tufting machine, a movable needle to carry the yarn through the fabric and produce a loop, a movable looper to enter the loop, gripping means to press a portion of the loop against the looper while the looper is moving and thereby grip such portion between the gripping means and the looper, and work feed means coacting with the needle.

26. In a tufting machine, a movable needle to carry the yarn through the fabric and produce a loop, a looper to enter the loop produced by the needle, a gripper arranged near the looper and spaced from the looper when the looper enters the loop to provide a space for a part of the loop, means to cause the looper and gripper to reciprocate together, means to move the gripper toward the looper to press the part of the loop in said space between the gripper and looper against the looper, and work feed means coacting with the needle.

27. In a tufting machine, a reciprocatory needle to pass the yarn through the fabric and produce a loop, means to operate the needle, work feed means, a looper, a loop gripper, means to move the looper toward the needle when the needle is in the lowered position to cause the looper to enter the loop and to move the looper from the needle when the needle rises, means timed in operation with respect to the movement of the looper to cause the gripper to grip the loop when the looper moves from the needle, a cutter, and means timed in operation with respect to the movement of the looper to move the cutter with relation to the looper to sever the loop upon the looper when the looper moves from the needle.

ROY H. WINDHAM.
MURL A. WHITE.