S. KAHN.

WINDOW CLEANING DEVICE.

APPLICATION FILED JUNE 5, 1920.

1,395,280. Patented Nov. 1, 1921.

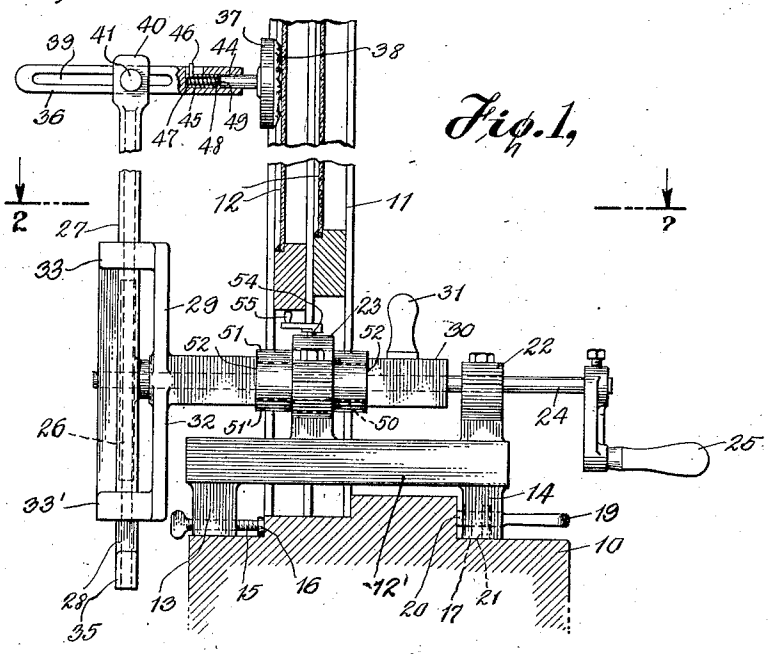

Fig. 1,

Fig. 2,

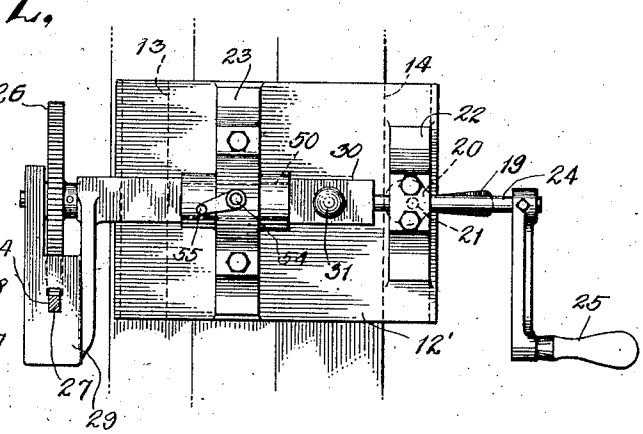

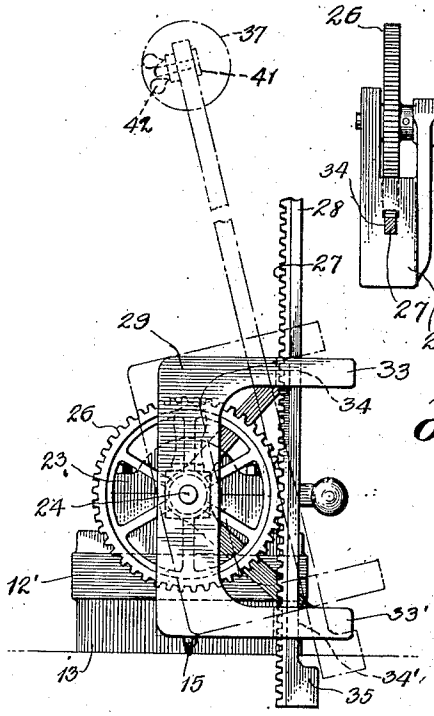

Fig. 3,

Inventor
SAMUEL KAHN

By his Attorney
Morris Finchstein

UNITED STATES PATENT OFFICE.

SAMUEL KAHN, OF NEW YORK, N. Y.

WINDOW-CLEANING DEVICE.

1,395,280. Specification of Letters Patent. Patented Nov. 1, 1921.

Application filed June 5, 1920. Serial No. 386,902.

To all whom it may concern:

Be it known that SAMUEL KAHN, citizen of the United States, and resident of the city of New York, in the county of New York and State of New York, has invented certain new and useful Improvements in Window-Cleaning Devices, of which the following is a specification.

This invention relates to window cleaning devices for cleaning the outside of windows by operating from within the room.

One object of this invention is to provide a device of the above type which shall be simple in construction and efficient in action.

Another object is to provide a device of the type described in which the cleaning members may be positively pressed against the surface of the window for cleaning the same.

A further object of this invention is to provide a device of the above type in which the holder for the cleaning member may be adjusted for various widths of window sills.

Other objects will be in part obvious and in part pointed out hereinafter.

The invention accordingly consists in the features of construction, combinations of elements and arrangement of parts which will be exemplified in the construction hereinafter described and of which the scope of application will be indicated in the following claims.

In the accompanying drawings, in which is shown one of various possible illustrative embodiments of this invention,

Figure 1 is an end elevation of a window cleaner embodying the invention shown in place on a window sill;

Fig. 2 is a cross-sectional view thereof in plan taken along line 2—2 of Fig. 1; and

Fig. 3 is a front elevation of the embodiment of the invention shown in Fig. 1 showing the cleaning member in tilted position shown in dotted lines.

Referring in detail to the drawing, 10 indicates the sill and 11 the sash of the window 12 and the embodiment of the invention there shown is in place on the sill with the cleaning member resting against the window in cleaning position. The device comprises a base 12 adapted to be adjusted to various widths of sills and to be clamped in position thereon. To this end are provided on the base supports 13 and 14 adapted to span the width of the sill and be held firmly thereagainst. A threaded bolt 15 passes through the support 13 and is provided with an abutment head 16 adapted to be forced against the exterior wall of the sill. The support 14 is recessed as at 17, for a clamp device comprising a lever arm provided at one end with a handle 19 for the manipulation thereof and having a clamping head 20 at the other end adapted to be forced against the inner wall of the sill. This head 20 is pivoted off-center as at 21 and when the lever arm is swung so as to force the projecting portion of the head 20 against the sill a strong clamping hold is obtained, as will be readily understood.

Mounted on the base 12 are journal bearings 22, 23, for a shaft 24 adapted to be hand operated as by the handle 25 by a person within the room. This shaft carries at its farther end a gear wheel 26 adapted and arranged to mesh with the rack 27 on the reciprocatory bar 28. The latter is supported in a bracket 29 secured in any suitable manner to a rock shaft 30 mounted on the base which is journaled in the bearing 23 and is recessed to loosely receive the shaft 24. The rock shaft 30 is provided with a handle 31 whereby it may be rotated in its bearing by a person within the room as will be clear from the drawing. The bracket 29 comprises an end piece 32 joining top and bottom members 33, 33′ having openings 34, 34′ formed therein to permit the bar 28 to be reciprocated therein. To limit the upward motion of the bar the latter is formed at the end with a stop 35 adapted to abut against the bottom member 33′ when the rod has been extended to the maximum amount.

The cleaning means will now be described. Carried on the rod 28 is a holding member 36 for a cleaning member 37 having a wiping member 38 which is adapted to be passed against the window pane and rubbed thereover either by the operation of the rock shaft 30 or the gear shaft 24, to cover points on the window at different levels and different angles.

As window sills are of various widths, it is desirable to make the distance from the reciprocatory bar 28 to the wiping member 38 of the cleaning member adjustable. To this end the holding member 36 is formed with a slot 39 and the upper end 40 of the reciprocatory bar 28 receives a bolt 41 rela-

tive to which the member 36 may be moved, and the cleaning member thus adjusted to be spaced from the window to any desired amount within the limits of the length of the slot. When the desired adjustment has been made, the holding member may be clamped in adjusted position by means such as the wing nut 42 operating on the bolt 41 as will be clear.

The cleaning member 37 is itself removably held in the holding member 36 by means of a pin 44 extending therefrom, which fits into a longitudinal recess 45 in the holding member and is held in place therein by means such as a pin 46, as will be clear from Fig. 1. In order that there may be effective pressing contact between the wiping surface 38 of the cleaning member and the window pane, a tensioning device may be provided. Thus, the pin 44 may be of smaller diameter as at 47 along a portion thereof so as to receive the spring 48 and the spring may thus act against the annular shoulder 49 formed where the portion of smaller diameter begins to press outwardly against the cleaning member as will be readily understood.

To further assist in pressing and adjusting the cleaning member against the pane as desired, means are provided whereby the operator may do so directly by hand from within the room. To this end the rock shaft 30 which is rectangular in cross-section has a recess 50 formed thereon so as to provide a cylindrical surface for receiving the parts 51, 51′ of a split sleeve, the ends of which are adapted to abut against the walls 52 of the recess. This split sleeve is loose in the bearing 23 and may be moved back and forth by means of the handle 31 thus carrying with it the rock shaft together with the bracket and cleaning member as will be readily understood. When the operator feels the desired pressure of the cleaning member against the pane he tightens the rock shaft in position by means such as the bolt 54, which may be screwed down against the split sleeve by operating the handle 55.

The operation of the device will now be clear. The window cleaner is first adjusted in position on the sill, approximately by means of the bolt 15 and then clamped tight by operating the lever 19 bracket and reciprocating bar being outside the window. For reaching any desired height on the window, the shaft 24 is operated by the handle 25 thus reciprocating the bar 28, the motion of the shaft being transmitted directly through rigid transmission members such as the gear and rack, whereby the bar is made completely responsive to any action of the handle 25. To reach portions of the window at various angles from the vertical the rock shaft 28 is turned so as to tilt the bar 28 as shown in dotted lines in Fig. 3.

The window cleaning device as herein described is thus seen to be provided with means for reaching any height on the window; means for reaching points thereon at any angle to the vertical position; means for adjusting the pressure of the window cleaning member against the window; and means for adjusting the device for varying widths of window sill.

The base itself is very low so that lower portions of the window may be reached as the reciprocating rod is drawn down and the window need be raised only slightly so as to have the complete lower surface thereof cleaned.

It will thus be seen that there is provided apparatus in which the several objects of this invention are achieved and which is well adapted to meet the most severe conditions of practical use.

As various possible embodiments might be made of the above invention and as various changes might be made in the embodiment above set forth, it is to be understood that all matter herein set forth or shown in the accompanying drawings is to be interpreted as illustrative and not in a limiting sense.

Having thus described my invention, I claim as new and desire to secure by Letters Patent:—

1. In a device of the character described, a rack-carrying bracket, a hollow shaft extending from said bracket, a sleeve encompassing a portion of said shaft wherein said shaft may be rotated, but held against longitudinal movement relative thereto, a bearing in which said sleeve is slidably mounted whereby said shaft may be moved longitudinally with said sleeve relatively to said bearing, and means for clamping said sleeve in said bearing whereby the longitudinal motion of said shaft is prevented while oscillatory motion of said shaft in said sleeve is allowed.

2. In a device of the character described, in combination with a cleaner member, a base, a screw member in said base, a cam lever in said base for coöperation with said screw member for attaching said device to a sill, and means extending from said base for carrying and operating said cleaner member.

3. In a device of the character described, a bracket a hollow shaft extending from said bracket, a sleeve encompassing a portion of said shaft, a bearing in which said sleeve is slidably mounted, means for clamping said sleeve in said bearing, a rack arranged for reciprocatory motion in said bracket, a cleaner supporting member adjustably secured to the upper end of said rack, and a cleaner member yieldingly mounted in said supporting member.

4. The combination of a base, means for detachably securing said base to a window sill, a bearing upstanding from said base, a

rack arranged for reciprocatory and for oscillatory motion; a bracket supported by said bearing carrying said rack, means for operating said rack, a rectangular shaft extending from said bearing, a cylindrical portion on said shaft, a split sleeve encompassing said cylindrical portion mounted in said bearing, means for clamping said sleeve in said bearing, a supporting member carried by said rack, and a cleaner member carried by said supporting member.

Signed at New York city, in the county of New York and State of New York, this 30th day of May, A. D. 1920.

SAMUEL KAHN.

Witnesses:

MORRIS E. LEVINE,

ALBERT E. SCHWARTZ.