United States Patent [19]

Bergey

[11] **3,817,021**

[45] **June 18, 1974**

[54] **SOLID STATE WATCH WITH MAGNETIC SETTING**

[75] Inventor: **John M. Bergey**, Lancaster, Pa.

[73] Assignee: **Time Computer, Inc.**, Lancaster, Pa.

[22] Filed: **Sept. 10, 1973**

[21] Appl. No.: **396,009**

Related U.S. Application Data

[62] Division of Ser. No. 162,813, July 15, 1971, Pat. No. 3,789,601, which is a division of Ser. No. 138,557, April 29, 1971, Pat. No. 3,782,102.

[52] **U.S. Cl.** ..... **58/50 R,** 58/85.5

[51] **Int. Cl.** **G04b 19/30,** G04b 27/00

[58] **Field of Search** ..... 58/23 R, 50 R, 85.5

[56] **References Cited**

UNITED STATES PATENTS

3,129,557	4/1964	Fiechter	58/23 R X
3,485,033	12/1969	Langley	58/50 R
3,576,099	4/1971	Walton	58/23 R X
3,643,418	2/1972	Polin et al	58/85.5

Primary Examiner—Richard B. Wilkinson
Assistant Examiner—Edith Simmons Jackmon
Attorney, Agent, or Firm—LeBlanc & Shur

[57] **ABSTRACT**

Disclosed is a solid state electronic wristwatch with no moving parts. The watch electronics are hermetically sealed in the watch case to be free of dust and moisture and the sealed components are resiliently mounted for improved shock resistance. Two setting switches and a demand switch within the casing are operated from outside the watch by permanent magnets, the demand magnet operating with a demand pushbutton. The setting magnet may be stored in the watch bracelet.

3 Claims, 15 Drawing Figures

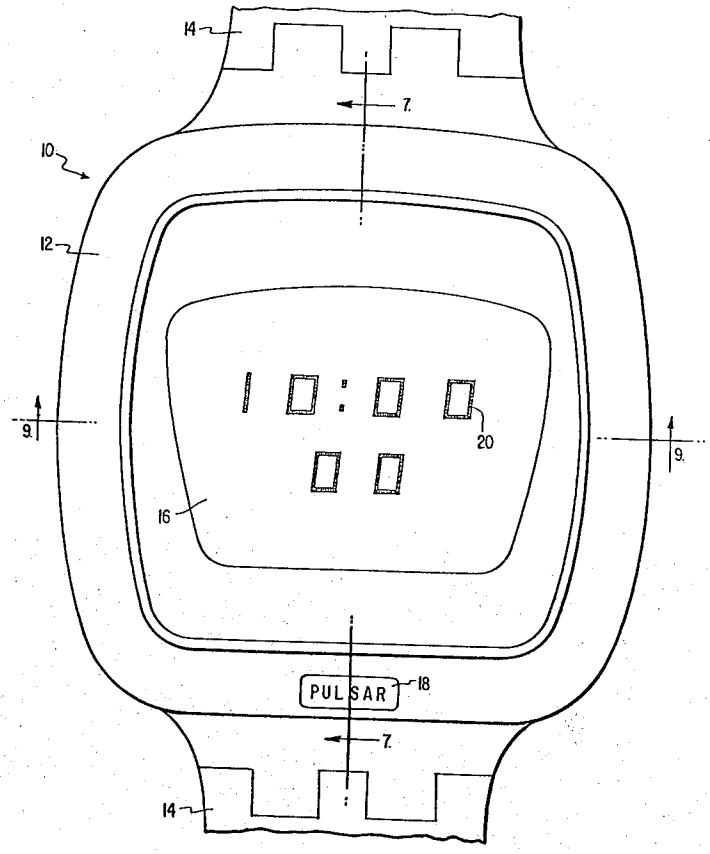

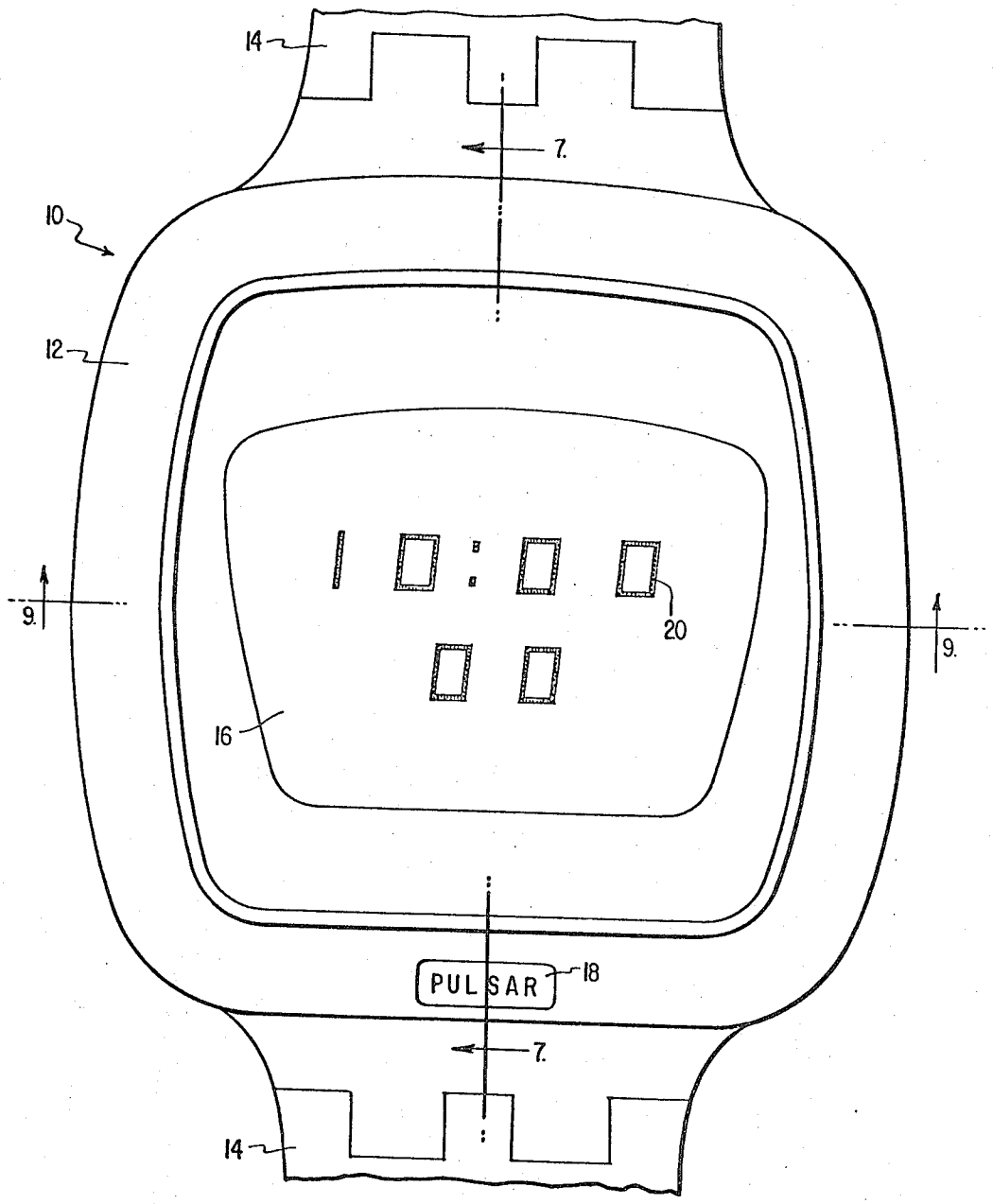

FIG. 1

FIG. 2

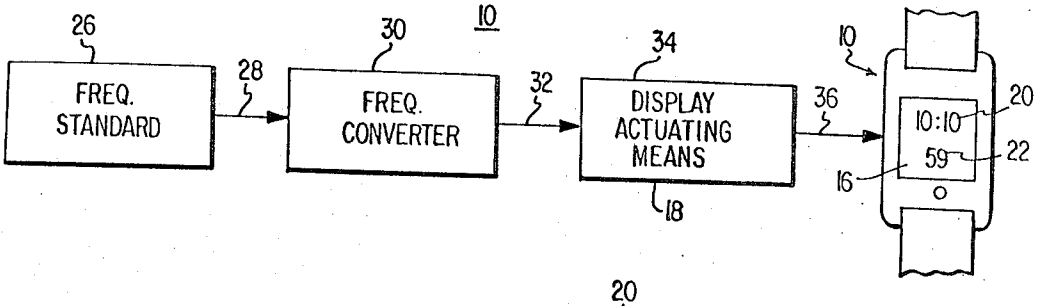

FIG. 5

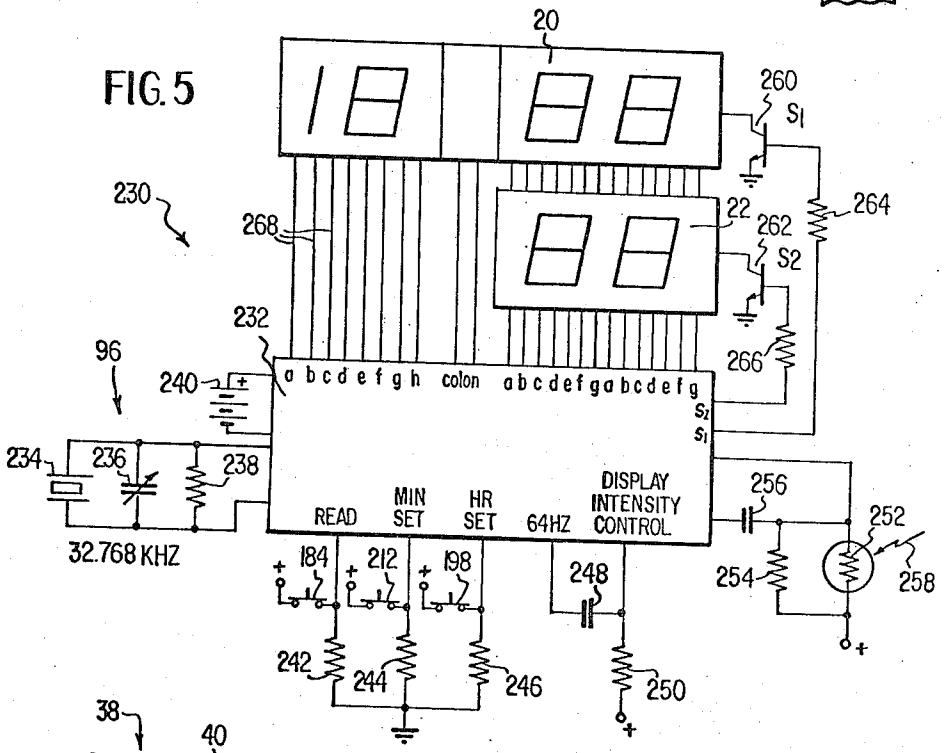

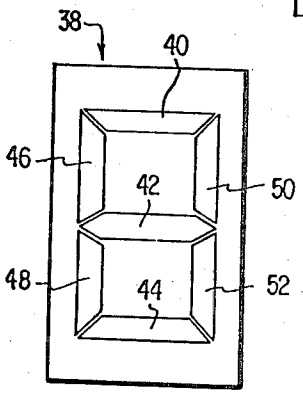

FIG. 3

FIG. 4

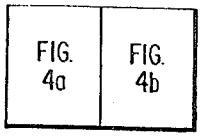
FIG. 4a
FIG. 4b

FIG. 4a

142
SECONDS
144
DISPLAY
DISPLAY
140
DECODER DRIVER
146
DECODER DRIVER
132
134
136
138
BCD
1
2
4
8
118
8HZ
÷2³
120
1HZ
÷10
122
÷6
124
229
231
233
162
96
XTAL OSC
98
32.768 HZ
÷2⁷
100
102
256 HZ
256 HZ
÷2
176
174
128 HZ
104
172
÷2
106
64HZ
222
÷2³
8HZ
108
112
2HZ (DURING SETTING)
110
MIN SET CIRCUIT
218
2HZ
220
÷2²
SECONDS RESET
228
116
SEE FIG. 4b

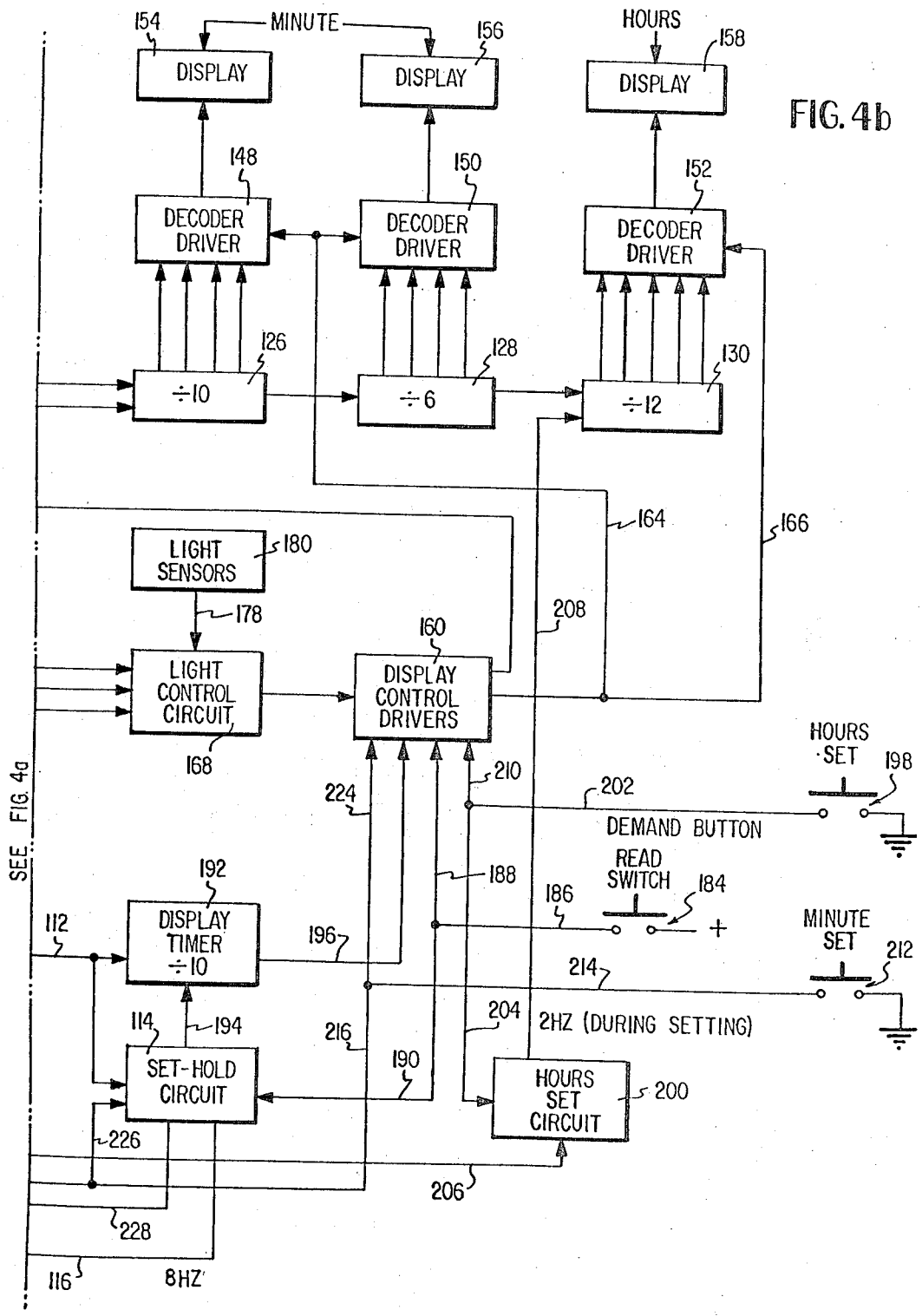
154
MINUTE
156
HOURS
158
DISPLAY
DISPLAY
DISPLAY
148
150
152
DECODER DRIVER
DECODER DRIVER
DECODER DRIVER
126
128
130
÷10
÷6
÷12
164
166
LIGHT SENSORS
180
178
208
160
LIGHT CONTROL CIRCUIT
168
DISPLAY CONTROL DRIVERS
HOURS SET
198
210
202
224
DEMAND BUTTON
READ SWITCH
184
186
188
192
DISPLAY TIMER ÷10
112
196
MINUTE SET
212
214
114
194
216
204
2HZ (DURING SETTING)
SET-HOLD CIRCUIT
190
HOURS SET CIRCUIT
200
226
206
228
116
8HZ
SEE FIG. 4a

FIG. 4b

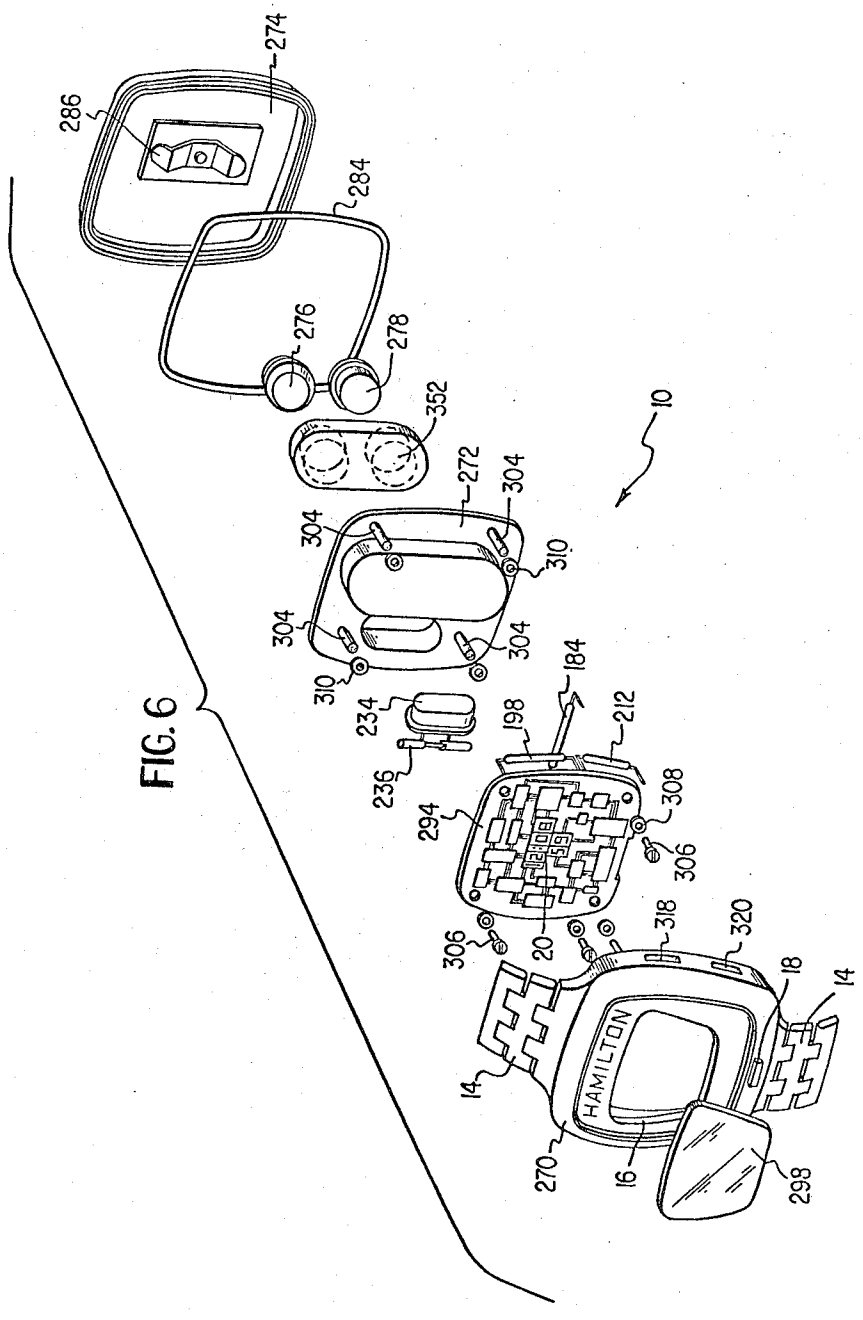
274
286
284
276
278
352
272
304
310
10
184
198
212
234
236
294
308
306
318
320
18
14
20
HAMILTON
270
16
298

FIG. 6

FIG. 7

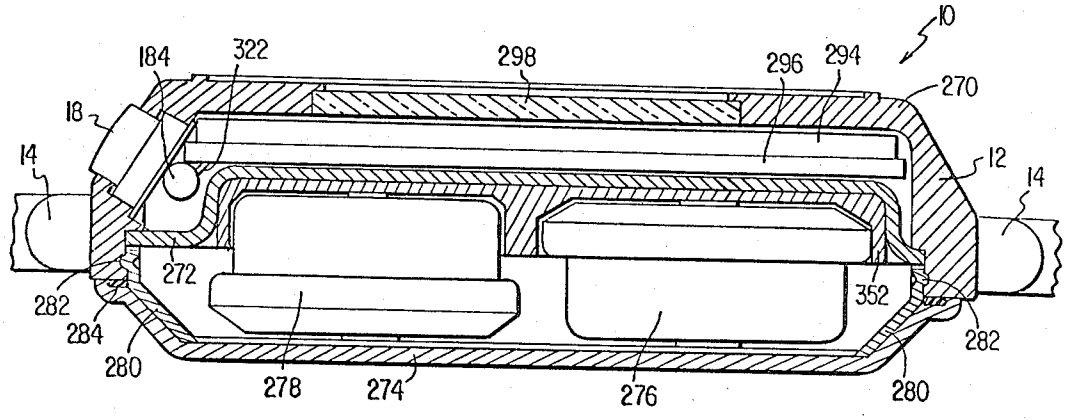
10
184
322
298
296
294
270
18
14
12
14
272
352
282
284
280
278
274
276
280
282

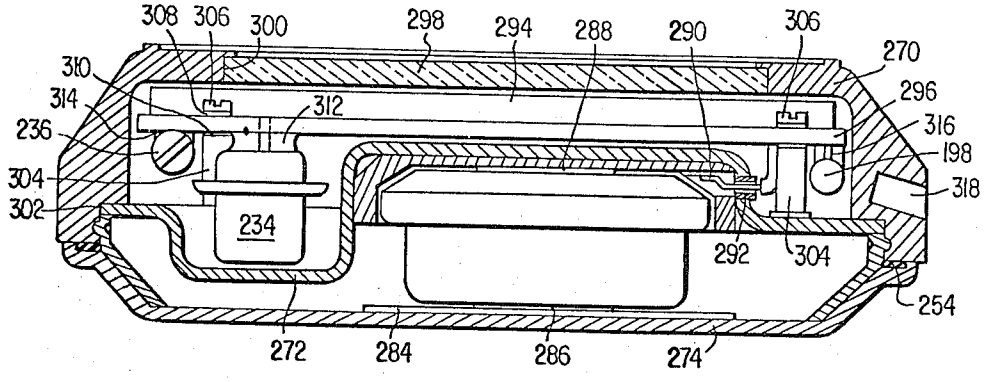
308
306
300
298
294
288
290
306
270
310
314
312
296
236
316
198
304
318
302
234
292
304
254
272
284
286
274

FIG. 9

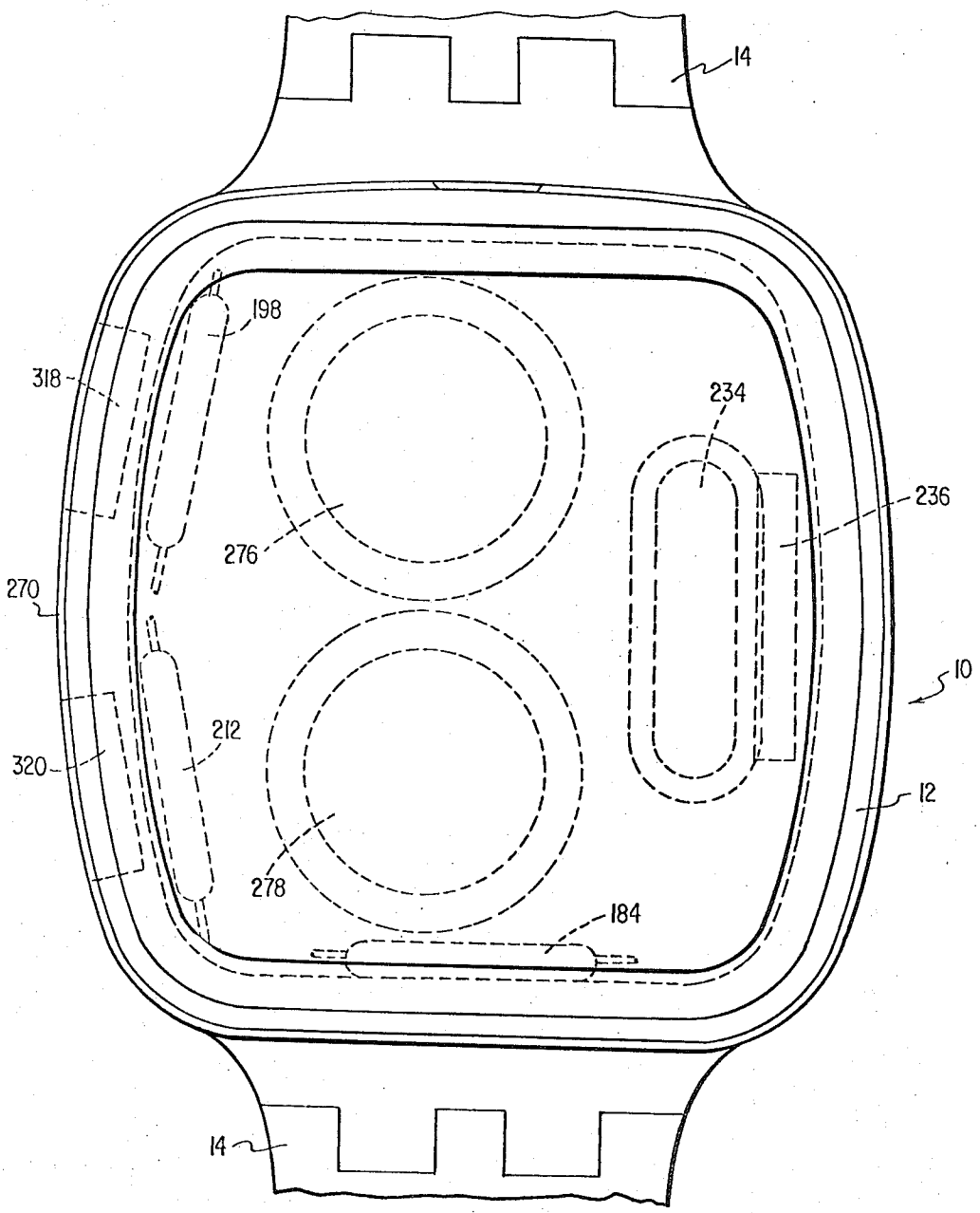

FIG. 8

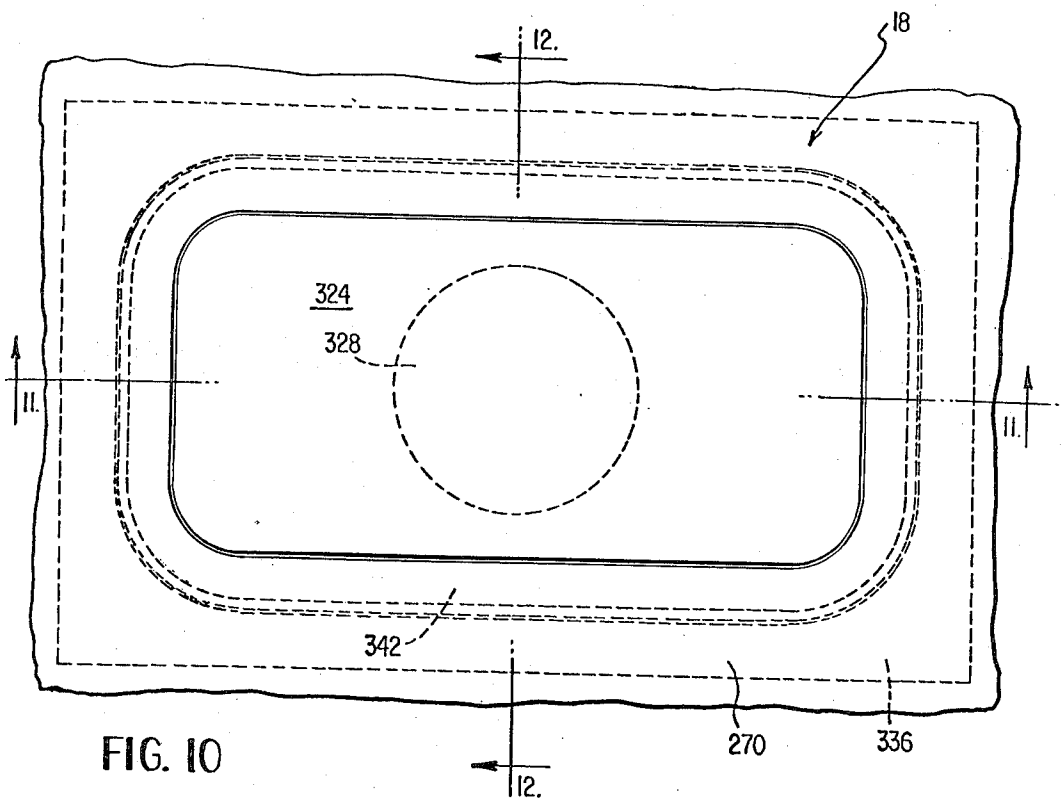
12.
18
324
328
11.
11.
342
270
336
12.

FIG. 10

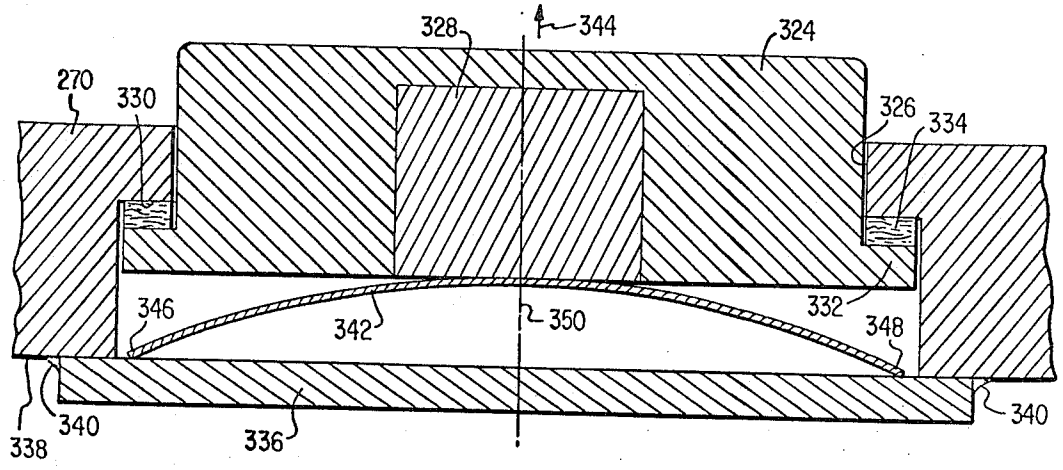
328
344
324
270
330
326
334
346
342
350
332
348
338
340
336
340

FIG. 11

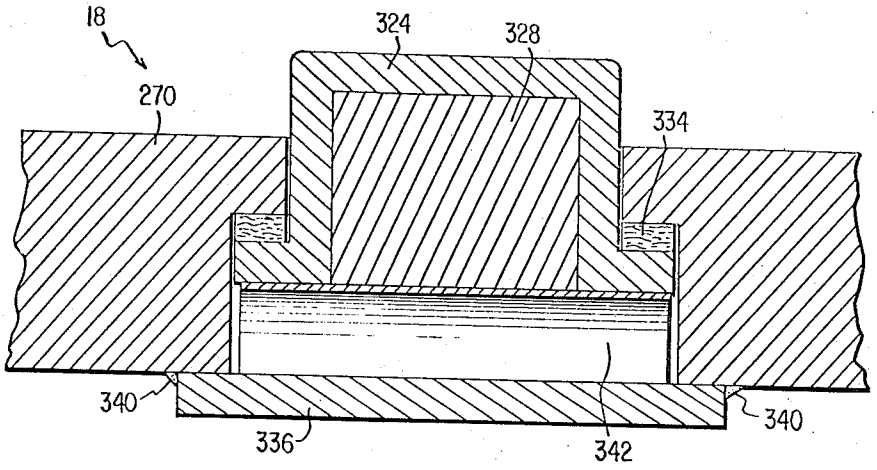

FIG. 12

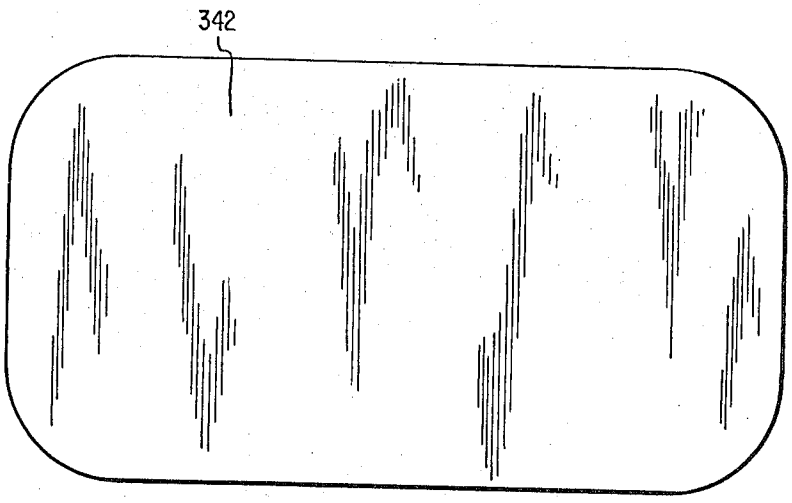

FIG. 13

SOLID STATE WATCH WITH MAGNETIC SETTING

This is a division of U.S. Pat. application Ser. No. 162,813 now U.S. Pat. No. 3,789,601 filed July 15, 1971 and which is a division of my copending U.S. Pat. application Ser. No. 138,557, now U.S. Pat. No. 3,782,102 filed Apr. 29, 1971 for Solid State Watch with MAGNETIC SETTING.

This invention relates to a solid state timepiece and more particularly to an electronic wristwatch which employs no moving parts. In the present invention, a frequency standard in the form of a crystal oscillator acts through solid state electronic circuit dividers and drivers to power in timed sequence the light-emitting diodes of an electro-optic display. Low power consumption and small size and weight are achieved through the use of complementary MOS circuits to produce what is in essence a miniaturized fixed program computer. In particular, the present invention is directed to a solid state wristwatch of this type in which the active components are completely sealed for longer life and which incorporates an improved read switch-magnetic setting arrangement.

Battery-powered wristwatches and other small portable timekeeping devices for various types are well known and are commercially available. The first commercially successful battery-powered wristwatch is of the type shown and described in assignee's U.S. Reissue Pat. No. RE 26,187, reissued Apr. 4, 1967, to John A. Van Horn et al. for ELECTRIC WATCH. Electric watches of this type employ a balance and a hairspring driven by the interaction of a current-carrying coil and a magnetic field produced by small permanent magnets.

In recent years, considerable effort has been directed toward the development of a wristwatch which does not employ an electromechanical oscillator as the master time reference. In many instances, these constructions have utilized a crystal-controlled high frequency oscillator as a frequency standard in conjunction with frequency conversion circuitry to produce a drive signal at a suitable timekeeping rate. However, difficulties have been encountered in arriving at an oscillator-frequency converter combination having not only the required frequency stability but also sufficiently low power dissipation and small size to be practical for use in a battery-powered wristwatch.

In order to overcome these and other problems, there is disclosed in assignee's U.S. Pat. No. 3,560,998, issued Feb. 2, 1971, a crystal-controlled oscillator type watch construction using low power complementary MOS circuits. The oscillator-frequency converter combination of that patent is described as suitable for driving conventional watch hands over a watch dial or, alternatively, for selectively actuating the display elements of an optical display in response to the drive signal output of the converter.

In assignee's U.S. Pat. No. 3,576,099, issued Apr. 27, 1971, there is disclosed an improved watch construction in which the optical display takes the form of a plurality of light-emitting diodes which are intermittently energized on demand at the option of the wearer of the watch. This assures a minimum power consumption and an increasingly long life for the watch battery. An improved watch construction of this general type incorporating solid state circuits and integrated circuit techniques is disclosed in assignee's copending U.S. Pat. application Ser. No. 35,196, filed May 6, 1970 now U.S. Pat. No. 3,672,155.

The present invention is directed to an improved watch construction of the same general type as disclosed in the aforementioned application and patents and one which utilizes no moving parts to perform the timekeeping function. The watch of the present invention consists of three major components, namely, a quartz crystal time base, a miniature time computer module, and a power supply or battery. These miniature components are packaged in a conventional size wristwatch chassis or case. A tiny quartz slab is precisely cut to predetermined dimensions so that it vibrates at 32,768 Hz when properly stimulated by pulses from an electronic oscillator. The high frequency from the crystal time base is divided down to one pulse per second by utilizing a multi-stage integrated circuit binary counter. The time computer module counts the pulse train, encodes it into binary form, and then decodes and processes the result so as to provide the appropriate signals at display stations.

Situated on the front of the watch adjacent the display is a pushbutton demand switch which, when pressed, instantly activates the appropriate visual display stations. Minues and hours are programmed to display for 1¼ seconds, with just a touch of the demand switch. Continued depression of this switch causes the minute and hour data to fade and the seconds to immediately appear. The seconds continue to count as long as the wearer interrogates the computer module. Computation of the precise time is continuous and completely independent of whether or not it is displayed.

The watch display consists of a television screenlike colored filter which passes the cold red light from gallium arsenide phosphide (GaAsP) light-emitting diodes. Preferably a 7 segment array forms each individual number at the appropriate moment at a brightness determined by a specially constructed dimmer or display intensity control circuit. This dimmer circuit utilizes one or more photo-detectors to measure ambient lighting conditions so the display intensity provides viewing comfort under all day or nighttime lighting conditions.

Important features of the present invention include a magnetically operated demand or read switch and magnetically operated "hour set" and "minute set" switches for setting the watch to the appropriate time. The "hour set" switch rapidly advances the hours without disturbing the accuracy of the minutes or seconds. The "minute set" switch automatically zeros the seconds while it advances the minutes to the desired setting. The whole procedure, even though seldom required, takes a matter of a few seconds.

Because of the magnetic setting and magnetic interrogation, active components of the watch may be hermetically sealed to produce a unit that is shockproof and waterproof, regardless of the environment in which it is placed. Since there is no conventional stem for winding or setting, the small shaft sealing problem is eliminated and no maintenance or repair is normally necessary since the active components are hermetically sealed and inaccessible to influences from the outside world. All solid state electronic components, including the light-emitting diode displays, have a virtually unlimited life.

It is therefore one object of the present invention to provide an improved electronic wristwatch.

Another object of the present invention is to provide a wristwatch which utlizes no moving parts for performing the timing function.

Another object of the present invention is to provide a solid state watch in which the active components of the watch are hermetically sealed.

Another object of the present invention is to provide a magnetically operated "on demand" display system for a solid state watch.

Another object of the present invention is to provide a solid state wristwatch incorporating magnetic time setting.

Another object of the present invention is to provide a solid state wristwatch having a digital optical display which is virtually shockproof and waterproof.

Another object of the present invention is to provide a solid state wristwatch with no moving parts having improved operating characteristics and reduced cost.

These and further objects and advantages of the invention will be more apparent upon reference to the following specification, claims, and appended drawings, wherein:

FIG. **1** is a front view of a conventional size man's wristwatch constructed in accordance with the present invention;

FIG. **2** is a simplified block diagram of the major components of the solid state watch of this invention;

FIG. **3** shows a display element for the watch of the present invention in the form of a **7** bar segment construction of light-emitting diodes;

FIGS. **4**, **4***a*, and **4***b*, taken together, are an overall block diagram of the electrical circuit for the solid state watch of FIG. **1**;

FIG. **5** shows a modified watch circuit in which substantially all of the major electrical components of the watch are formed using large-scale integrated circuitry;

FIG. **6** is an exploded view of the wristwatch of FIG. **1**;

FIG. **7** is a cross section taken along line **6—6** of FIG. **1**;

FIG. **8** is a bottom plan or rear view of the watch of FIG. **1**;

FIG. **9** is a cross section perpendicular to that of FIG. **7** taken along line **9—9** of FIG. **1**;

FIG. **10** is an enlarged plan view of the demand button assembly of the watch of FIG. **1**;

FIG. **11** is a cross section through the demand button assembly taken along line **11—11** of FIG. **10**;

FIG. **12** is a cross section perpendicular to that of FIG. **11** taken along line **12—12** of FIG. **10**; and

FIG. **13** is a plan view of the flat demand button spring before it is formed into the curved shape shown in FIGS. **11** and **12**.

Referring to the drawings, the novel watch of the present invention is generally indicated at **10** in FIG. **1**. The watch is constructed to fit into a watch case **12** of approximately the size of a conventional man's wristwatch. The case **12** is shown connected to a wristwatch bracelet **14** and includes a display window **16** through which time is displayed in digital form as indicated at **20**. Mounted on the case **12** is a demand switch pushbutton **18**, by means of which the display **20** may be actuated when the wearer of the wristwatch **10** desires to ascertain the time.

In normal operation, time is continuously being kept but is not displayed through the window **16**. That is, no time indication is visible through the window and this is the normal condition which prevails in order to conserve battery energy in the watch. However, even through the time is not displayed through the window **16**, it is understood that the watch **10** continuously keeps accurate time and is capable of accurately displaying this time at any instant. When the wearer desires to ascertain the correct time, he depressed the pushbutton **18** with his finger and the correct time is immediately displayed at **20** through the window **16**. The hours and minutes are displayed through the window **16** for a predetermined length of time, preferably 1¼ seconds, irrespective of whether or not the pushbutton **18** remains depressed. The exact time of the display is chosen to given the wearer adequate time to consult the display to determine the hour and minute of time. Should the minutes change during the time of display, this change is immediately indicated by advancement of the minute reading to the next number as the watch is being read. If the pushbutton **18** remains depressed, at the end of one and one-quarter seconds, the hours and minutes of the display are extinguished, i.e., they disappear, and simultaneously the seconds reading is displayed through the window **16** immediately below the hours and minutes display **20**. The advancing seconds cycling from 0 to 59 continue to be displayed through window **16** until pushbutton switch **18** is released.

FIG. **2** is a simplified block diagram of the principal components of the watch **10** of FIG. **1**. The circuit comprises a time base or frequency standard **26** including a piezoelectric crystal to provide a very accurate frequency such that the frequency standard or oscillator oscillates at 32,768 Hz. This relatively high frequency is supplied by a lead **28** to a frequency converter **30** in the form of a divider which divides down the frequency from the standard so that the output from the converter **30** appearing on lead **32** is at a frequency of 1 Hz. The frequency converter **30** preferably comprises a binary counting chain of complementary MOS transistors of the type shown and described in assignee's U.S. Pat. No. 3,560,998, the disclosure of which is incorporated herein by reference. The 1 Hz signal is applied by lead **32** to a display actuator **34** which in turn drives the displays **20** and **22** of the watch **10** by way of electrical lead **36**.

FIG. **3** shows a display station **38** forming one of the numerals of the hours and minutes display **20** and the seconds display **22**. Each of these display stations (with the exception of the hours tens display as more fully described below) is preferably in the form of a **7** bar segment array of light-emitting diodes of the type shown and described in detail in assignee's U.S. Pat. No. 3,576,099, issued Apr. 27, 1971, the disclosure of which is incorporated herein by reference. FIG. **3** shows **7** bar segments of light-emitting diodes **40, 42, 44, 46, 48, 50,** and **52,** all of elongated shape and arranged so that by lighting an appropriate combination of the bars or segments any of the numbers **0** through **9** may be displayed.

FIGS. **4**, **4***a*, and **4***b* show an overall block diagram of the electrical circuit of the watch of the present invention. Reference may be had to assignee's copending

U.S. Pat.. application Ser. No. 35,196, filed May 6, 1970 now U.S. Pat. No. 3,672,155, the disclosure of which is incorporated herein by reference, for a detailed description of the construction and operation of the electrical circuit. Briefly, however, and referring to the overall block diagram of FIGS. **4**, **4***a*, and **4***b*, the watch **10** comprises an oscillator **96** which is controlled by a crystal to produce an output on lead **98**, i.e., a pulse train on that lead having a pulse repetition rate of 32,768 Hz. The crystal output passes through a complementary symmetry MOS counter **100** of the type shown and described in assignee's U.S. Pat. No. 3,560,998, which acts as a divider, dividing the output by 2^7, i.e., a seven stage counter, to produce an output on lead **102** having a pulse repetition rate of 256 Hz. This signal is divided by 2 in counter **104**, by 2 again in counter **106**, by 8 (2^3) in counter **108**, and by 4 (2^2) in counter **110**.

An 8 Hz output on lead **112** from counter **108** is applied to a set-hold circuit **114** where the 8 Hz repetition rate pulse train appears as an output on lead **116**. The 8 Hz signal on lead **116** is applied to a counter **118** where it is divided by 8 (2^3) to produce a 1 Hz output pulse train on lead **120**. The 1 Hz pulse train is divided by 10 in counter **122**, divided by 6 in counter **124**, divided by 10 again in counter **126**, divided by 6 in counter **124**, divided by 10 again in counter **126**, divided by 6 again in counter **128**, and the output of this counter is finally applied to counter **130** which divides by 12. The output of counter **122** appearing on leads **132**, **134**, **136**, and **138** is a binary coded decimal **1248** code which is applied to the decoder-driver **140** which, in turn, energizes the tens digits of the seconds display indicated at **142**. The ones digits of the seconds display indicated at **144** are similarly actuated from counter **124** by way of seconds decoder-driver **146**. Similar decoder-drivers **148**, **150**, and **152** actuate the tens digits of the minutes display at **154**, the ones digits of the minutes display at **156**, and the hours display at **158**. Counter **130** has five output leads to decoder-driver **152** for a purpose more fully described below. The other decoder-drivers **146**, **148**, and **150** are actuated by BCD **1248** codes from their respective counters **124**, **126**, and **128** in the same manner as decoder-driver **140** is actuated from counter **122**.

As previously stated, in order to conserve energy, the light-emitting diodes are only energized on demand, i.e., when the pushbutton **18** of FIG. **1** is depressed by the wearer's finger. Even when the button is depressed, the lights are not always continuously lit but instead, in order to conserve power, are intermittently lighted during less than full daylight conditions at a frequency sufficiently high to give the appearance of continuity due to the light retention properties of the human eye. The pulses for intermittently lighting or pulsing the seconds display are derived from a display control driver **160** which applies the ON-OFF pulses by way of lead **162** to the seconds decoderdrivers **140** and **146**. Similar intermittent pulses from the display control drivers **160** are applied by lead **164** to the minutes decoder-drivers **148** and **150** and by lead **166** to the hours decoder driver **152**. The exact frequency at which the displays are turned on and off while always sufficiently high to give the impression to the human eye of continuous light is determined by a light control circuit **168** which supplies a light control signal over lead **170** to display control drivers **160**. The light control signal is either DC (full daylight) or a combination of a 64 Hz signal supplied from counter **106** by way of lead **172**, a 128 Hz signal supplied by counter **104** by way of lead **174**, and a 256 Hz signal supplied from the output of counter **100** by way of lead **176**. These signals are combined in the light control circuit **168** in a manner determined by the output signal on lead **178** to the light control circuit from ambient light sensors **180**. These light sensors are in the form of three photo-transistors mounted on the face of the watch inside the viewing window and act to produce increased illumination from the light-emitting diodes during strong daylight conditions and less illumination from the diodes under nighttime or reduced light conditions. In the preferred embodiment, light sensors **180** provide four different light levels from the light-emitting diodes so that the watch face may be read with equal facility and comfort under all possible lighting conditions, while at the same time conserving energy at times when less light is needed from the diodes to make them visible, such as is the case when the watch is read in at least partial darkness.

As previously stated, the watch face is ordinarily not illuminated. The hours and minutes diodes only light up when the demand switch is depressed. Actuation of the demand button by the wearer causes the read switch **184** in FIG. **4** to close, causing the positive side of the power supply to be connected by way of leads **186** and **188** to the display control drivers **160**. Energization of these drivers permits passage through them of the signal from the light control circuit **168** which is passed on to the decoder-drivers causing the minutes and hours displays to be illuminated. No output from the display control diodes **160** appears on lead **162** at this time and the seconds displays are not illuminated. Closure of the read switch **184** also applies B+ by way of lead **190** to set-hold circuit **114** which immediately resets a display timer **192** by way of lead **194**. Display timer **192** is a divide by **10** counter and has applied to its input the 8 Hz pulse train on lead **112**. This timer divides the 8 Hz pulse by **10** and after 1¼ seconds produces an output pulse on lead **196** which is applied to display control driver **160**. This pulse causes the display control driver to change state, removing the output from leads **164** and **166** and causing the minutes and hours display to be extinguished. At the same time, the output is switched to lead **162** causing the seconds display to be illuminated simultaneous with the extinguishment of the hours and minutes display.

An important feature of the watch of the present invention lies in the fact that the hours may be set independently of the minutes and seconds and at a very rapid rate. Closure of hours-set switch switch **198** grounds one input of an hours-set circuit **200** by way of leads **202** and **204**. Hours-set circuit **200** receives a 2 Hz pulse train from counter **110** by way of lead **206** and actuation of the hours-set circuit by closure of hours-set switch **198** causes the hours-set circuit **200** to pass the 2 Hz signal on lead **206** to counter **130** by way of lead **208**. Hours-set switch **198** is also connected to the display control drivers **160** to cause an output to appear on leads **164** and **166** assuring that the hours and minutes are displayed when the hours are being reset during closure of switch **198**. A minute-set switch **212** is connected by leads **214** and **216** to a minute-set circuit **218**. As before, actuation of this circuit causes it to pass a 2 Hz pulse train on lead **220** from counter **110**

by way of lead **222** to the divide by **10** counter **126** driving the minutes display. Minute-set switch **212** is likewise connected by lead **224** to display control drivers **160,** again to insure an output on leads **164** and **166** during resetting.

In the watch of the present invention, actuation of the minute-set switch **212** automatically zeros the seconds display. The reason for this is that most time signals, such as those given over the radio and the like, are given on the hour or on the minute and in order to start the watch in synchronism with the correct time as given by such a signal, it is necessary that the seconds display be at zero at the time the radio tone or other time signal is heard. In order to accomplish this, the "minute set" switch **212** is connected by leads **214** and **216** and a further lead **226** to set-hold circuit **114.** Energization of this circuit from lead **226** produces an output pulse on output lead **228** which is applied to the reset terminals of counters **118, 122,** and **124** by way of leads **229, 231,** and **233,** resetting these counters to zero and causing the seconds display to be automatically zeroed. Depressing read switch **184** unlocks the set time and begins the real time counting sequence.

FIG. **5** shows a modified embodiment of the solid state watch of the present invention, generally indicated at **230.** In FIG. **5,** like parts bear like reference numerals, and the overall construction of the watch in FIG. **5** is generally similar to the embodiment previously described. The principal modification incorporated in the embodiment of FIG. **5** is that the vast majority of the electrical components are formed from one or more large-scale integrated circuits, as indicated by the large integrated circuit block **232** in FIG. **5.** Reference may be had to assignee's copending U.S. Pat. application Ser. No. 138,547, filed Apr. 29, 1971 now U.S. Pat. No. 3,714,867, and entitled SOLID STATE WATCH INCORPORATING LARGE-SCALE INTEGRATED CIRCUITS, in the name of Bruno M. Dargent, for a detailed description of the large-scale integrated circuit **232,** the disclosure of that copending application being incorporated herein by reference.

In FIG. **5,** the crystal oscillator **96** is of the type previously described and includes a piezoelectric crystal **234,** a variable trimming capacitor **236,** and a bias resistor **238.** The active components of the oscillator are a pair of complementary MOS transistors connected to form an inverter and they are incorporated in the large-scale integrated circuit **232.** As in the previous embodiment, the oscillator preferably operates at a frequency of 32,768 Hz. The entire watch is powered from a conventional watch battery or power supply, indicated at **240,** and the demand switch **184,** the minute-set switch **212,** and the hour-set switch **198** are all connected from the positive side of the battery **240** to the other or grounded side of the battery through the respective resistors **242, 244,** and **246.**

The modified embodiment in FIG. **5** includes a modified dimmer or display intensity control circuit comprising a capacitor **248,** a resistor **250,** a light sensitive resistor **252,** a second resistor **254,** and a second capacitor **256.** These components in effect form a multivibrator which is triggered at a frequency of 64 Hz, which trigger signal is derived from an intermediate stage of the divider or frequency converter **30** incorporated in the large-scale integrated circuit **232.** The pulse width of the multivibrator and therefore the duty cycle of the output from the multivibrator depends primarily on the value of fixed capacitor **256** and the value of the variable light sensitive resistor **252.** For decreasing amounts of ambient light impinging upon resistor **252,** as indicated by the arrow **258,** the duty cycle of the multivibrator output is reduced and this output signal is applied to the displays **20** and **22** so as to vary their intensity with the amount of ambient light, i.e., the intensity is increased when the ambient light is great and the intensity of the light-emitting diodes is reduced when ambient light decreases.

The displays are controlled from the large-scale integrated circuit **232** by a pair of bipolar switches **260** and **262,** labeled S_1 and S_2, respectively. These transistors connect the cathodes of the light-emitting diodes of the display to the negative side of the battery **240,** i.e., to ground, so that the circuit to the light-emitting diodes is completed when the transistors **260** and **262** are in conduction. These transistors have their bases connected to the large-scale integrated circuit **232** through respective resistors **264** and **266.** It is understood that when one of the switches S_1 or S_2 is turned on, the other is off and vice versa so that all displays are not simultaneously on. When switch S_1 (**260**) is turned on, this completes the circuit to the hours and minutes display diodes **20.** If the demand button remains depressed, after 1¼ seconds switch **260** is turned off by the large-scale integrated circuit **232** and switch **262** is simultaneously turned on so that the hours and minutes display **20** disappears and the seconds display **22** immediately comes on. These displays receive timing signals from the large-scale integrated circuit **232** through the connecting leads generally indicated at **268.**

FIG. **6** is an exploded view of the watch and FIG. **7** is a cross section through the watch of the present invention taken along line **7—7** of FIG. **1.** The watch case **12** comprises a front plate **270,** an inner cover **272,** and a removable back plate **274.** These three plates are preferably made from a non-magnetic metal material, such as that sold under the trade name "Havar." Between inner cover **272** and back plate **274** is the power supply in the form of a pair of 1.5 volt dry cells **276** and **278.** The cells are preferably silver oxide batteries and are connected in series to produce an operating voltage of about 2.5 to about 3.2 volts DC. Back plate **274** carries a plurality of mounting springs **280** with projections **282** which snap into corresponding recesses in the front plate **270** for ready attachment and removal of the back plate so that access may be gained to the battery cells **276** and **278.** The back plate is sealed by an annular rubber O-ring **284.**

FIG. **8** is a bottom plan or rear view of the watch of FIG. **1** with portions shown in dashed lines and FIG. **9** is a cross section at right angles to the cross section of FIG. **7** taken along line **9—9** of FIG. **1.** FIG. **10** is an enlarged plan view of the assembly for demand button **18.** The battery cells are separated from back plate **274** by annular insulating washers **284** but have their negative side connected to the back plate and therefore grounded to the case by an electrically conductive cell connector **286.** A similar cell connector **288** (FIG. **9**) connected to the positive side of the power supply is electrically connected to a positive cell lead **290** which passes through a suitable glass seal **292** to establish electrical connection to the electronic circuit indicated generally at **294** mounted on circuit substrate **296.** Trimming capacitor **236** and the piezoelectirc crystal **234** are also mounted on the substrate **296.** Placed in

the viewing window over the light-emitting diodes is a light filter **298.** The filter is fabrictrd from a ruby to insure relative scratch and break resistance. A solderable metal material is deposited along the edge of the filter to aid in the soldersealing of the filter to the front plate **270** as indicated at **300** in FIG. **9.** The pink ruby is preferably coated with a red dyed clear epoxy paint on its inside surface to provide a deep red color which transmits most of the 6,500 Angstrom wavelength light from the light-emitting diodes carried by the electronic substrate **296.** Inner cover **272** is soldersealed to front plate **270** around its edge, as indicated at **302** in FIG. **9,** and this inner cover carries four mounting posts, two of which are illustrated at **304** in FIG. **9.** These posts or studs are welded to inner cover **272** and the substrate **296** is held against these shoulder studs by means of screws **306.** Both sides of the substrate rest against a resilient shock absorbent material **308** and **310** to provide maximum protection against severe shocks encountered when dropping the watch. The crystal can **234** and trimming capacitor **236** are all similarly protected by soft potting compound between the substrate and their assembled position as indicated at **312** and **314,** respectively.

As can be seen, the electronics **294** is hermetically sealed all the way around between inner cover **272** and front plate **270.** This hermetic seal acts as protection to the electronics and also prevents condensation of water vapor on the filter **298.** The hermetically sealed cavity is provided by solder-sealing the filter to the front plate and soldersealing the inner cover to this plate. The battery compartment is outside this cavity and is protected from the outside world by the case back or back plate **274** and the O-ring gasket **284.** Electrical connections of the battery to the electronics are provided by glass-to-metal sealed feedthrough connectors as indicated at **292.**

An important feature of the present invention resides in the fact that the read or demand switch **184,** the minute-set switch **212,** and the hour-set switch **198** are all magnetically operated in such a way that the electronics **294** remains hermetically sealed. These three switches are shown in dashed lines in FIG. **8** and are preferably in the form of reed switches. There are several significant advantages in utilizing a permanent magnet operated reed switch to perform the hours, minutes and demand readout functions in the watch. First, the miniature switches are glass encapsulated, hermetically sealed devices which have a proven history of high reliability in this type of application. Secondly, no through-holes are required in the watch case so true hermetic sealing is simplified. Also, actuation of the switches requires a deliberate activity on the part of the wearer so that inadvertent operation is minimized. These switches are positioned in the watch as illustrted in FIG. **8** and attached to the substrate **296** by a soft potting compound, as illustrated, for example, at **316** in FIG. **9** for the hours-set switch **198.** These switches are preferably of the type identified as MINI–2 switches manufactured by Hamlin, Inc. of Lake Wills, Wisconsin, or equivalent. A switch pull sensitivity of between **15** and **20** ampereturns is desirable for the demand switch, while 35 to 40 ampereturns is desirable for both the hour and minutes set switches.

As best seen in FIG. **8,** the front plate **270** of the watch case is provided with a first elongated setting slot **318** adjacent hour-set switch **198** and a second setting slot **320** adjacent the minute-set switch **212.** A portion of the setting slot **318** is illustrated in solid lines in FIG. **9.** It is understood that the minute-set switch slot or recess **320** is of similar construction. These two recesses or slots, one adjacent the hour-set switch and the other adjacent the minute-set switch are dimensioned so that a long cylindrical or square magnet can be placed into this recess when a change in setting time is desired. In the preferred embodiment, the setting magnet takes the form of a permanent magnet made from Alinco V material with dimensions of 0.500 inch long by 0.062 inch square. This produces a field of about 700 gauss.

As best seen in FIG. **7,** the demand switch **184** is supported from the substrate **296** in a manner similar to the other switches, i.e., by a soft potting compound as illustrated at **322.** FIG. **10** is a plan view of the pushbutton assembly **18,** FIG. **11** is a cross section through the pushbutton assembly taken along line **11—11** in FIG. **10,** FIG. **12** is a cross section at right angles to that of FIG. **11** taken along line **12—12** of FIG. **10,** and FIG. **13** shows the flat pushbutton spring before it is formed into a curved spring shape.

The pushbutton assembly is constructed so as to retain the hermetic seal about the electronic components of the watch. The pushbutton assembly comprises an elongated pushbutton proper **324** slidably received through a suitable aperture **326** in the front plate **270** of the watch case. Press fit into a circular recess in the center of the pushbutton **324** in a permanent magnet **328** formed in the shape of a right circular cylinder. Recess **326** is stepped to form a shoulder **330** which cooperates with an annular flange **332** on the lower end of pushbutton **324** to limit the upward or outward movement of the pushbutton. The plate shoulder **330** and annular flange **332** are preferably separated by an annular gasket **334** made of silicone.

The inner end of aperture **326** is closed off by a flat rectangular plate **336** made of brass or other suitable non-mangetic material. Brass plate **336** is soldered for a hermetic seal all the way around its edge to the inner surface **338** of front plate **270** as indicated at **340** in FIGS. **11** and **12.** In this way, the pushbutton **324** and magnet **328,** while mounted on the front plate, are sealed externally of the chamber carrying the watch electronics. Resting on top of brass plate **336** is a substantially rectangular arched or curved spring **342** which urges the pushbutton **324** and the magnet **328** carried by it upwardly or outwardly in the direction of the arrow **344** in FIG. **11.** Spring **342** is preferably made of Havar or other suitable non-magnetic metallic material and, wbile its ends **346** and **348** rest on top of brass plate **336,** it is symmetrically curved or arched about the centerline **350** of the pushbutton assembly so that its center is spaced approximately 0.030 inch from the top of brass plate **336.** FIG. **13** shows the Havar spring **342** in plan view while it is flat and before it is formed into the arched or curved configuration illustrated in FIGS. **11** and **12.** By way of example only, the spring may have a thickness of approximately 0.0024 inch. The demand magnet **328** which is press fit into the recess in pushbutton **324** is about 0.070 inch long and about 0.090 inch in diameter and utilizes cobalt platinum (CoPt) to produce a field of about 1,300 gauss.

It is apparent from the above that the present invention provides an improved timepiece construction and particularly a timepiece having sufficiently small size,

weight and power consumption for use as a conventional man's wristwatch. Important features of the present invention include a resilient shock-free mounting arrangement, a completely hermetically sealed assembly so that the electronics, display and other major components are completely sealed from atmospheric effects, a magnetically operated demand or read switch, and a pair of magnetically operated setting switches for setting the watch time. The setting permanent magnet may conveniently be stored in a suitable recess in the watch bracelet when not in use or may otherwise be carried on or adjacent the watch or in a suitable recess provided in the watch case. If desired, it is possible to paint the substrate and light reflecting materials in the vicinity of the light-emitting diodes a dark flat black. This improves readout visibility by providing maximum contrast ratio between the light-emitting diodes and their background. The piezoelectric crystal for the oscillator is preferably contained in its own hermetically sealed vacuum can to reduce its series resistance, improved its activity for any given drive current, and to minimize the natural aging effects of the crystal. In the preferred embodiment, the power supply is formed of two silver oxide cells in a standard size container operating at a nominal voltage of about 3 volts, but it is understood that any conventional wristwatch power supply may be utilized. As illustrated in FIG. **7**, the electrical cells **276** and **278** are preferably mounted in a cell holder **352** mounted on the outside or backside of inner cover **272**.

While the preferred embodiment and certain especially significant operating conditions have been set forth in detail, it should be understood that various modifications are readily apparent. In the preferred embodiment, the light-emitting diodes take the form of gallium arsenide phosphide LED's of the type more fully shown and described in assignee's U.S. Pat. No. 3,576,099, issued Apr. 27, 1971, the disclosure of which is incorporated herein by reference. However, it is understood that the display can assume any one of several forms. For example, the optical display may be formed using such well known devices as miniature incandescent bulbs, other types of light-emitting diodes, or the well known liquid crystals, as well as lesser known devices, such as ferro-electric crystals or electro-luminescent displays and others. If desired, the electrical signals may be connected through a suitable electromechanical transducer or motor to drive conventional watch hands.

The invention may be embodied in other specific forms without departing from the spirit or essential characteristics thereof. The present embodiments are therefore to be considered in all respects as illustrative and not restrictive, the scope of the invention being indicated by the appended claims rather than by the foregoing description, and all changes which come within the meaning and range of equivalency of the claims are therefore intended to be embraced therein.

What is claimed and desired to be secured by United States Letters Patent is:

1. A wristwatch comprising a watch case made of non-magnetic material, timekeeping means in said case including a liquid crystal time display and a magnetic field responsive switch for setting said display, said case including a recess adjacent said switch whereby said switch may be actuated by the insertion of a permanent magnet into said recess from outside said case.

2. A wristwatch according to claim **1** including a second magnetic field responsive setting switch in said case, said case having a second recess adjacent said second switch.

3. A wristwatch according to claim **1** wherein said timekeeping means includes a magnetic field responsive demand switch in said case for activating said display upon demand, and a permanent magnet movably mounted on said case adjacent said demand switch.

* * * * *

PO-1050
(5/69)

UNITED STATES PATENT OFFICE
CERTIFICATE OF CORRECTION

Patent No. 3,817,021 Dated June 18, 1974

Inventor(s) JOHN M. BERGEY

It is certified that error appears in the above-identified patent and that said Letters Patent are hereby corrected as shown below:

Col. 1, line 26, "for various" should read --of various--; line 32, "balance" should read --balance wheel--.

Col. 5, line 58, "decoderdrivers" should read --decoder-drivers--.

Col. 9, line 56, "illustrted" should read --illustrated--.

Col. 10, line 52, "wbile" should read --while--.

Col. 11, line 21, "improved" should read --improve--.

Signed and sealed this 29th day of October 1974.

(SEAL)
Attest:

McCOY M. GIBSON JR.
Attesting Officer

C. MARSHALL DANN
Commissioner of Patents

PO-1050
(5/69)

UNITED STATES PATENT OFFICE
CERTIFICATE OF CORRECTION

Patent No. 3,817,021 Dated June 18, 1974

Inventor(s) JOHN M. BERGEY

It is certified that error appears in the above-identified patent and that said Letters Patent are hereby corrected as shown below:

Col. 1, line 26, "for various" should read --of various--; line 32, "balance" should read --balance wheel--.

Col. 5, line 58, "decoderdrivers" should read --decoder-drivers--.

Col. 9, line 56, "illustrted" should read --illustrated--.

Col. 10, line 52, "wbile" should read --while--.

Col. 11, line 21, "improved" should read --improve--.

Signed and sealed this 29th day of October 1974.

(SEAL)
Attest:

McCOY M. GIBSON JR.
Attesting Officer

C. MARSHALL DANN
Commissioner of Patents