June 14, 1927. 1,632,150

H. P. SPARKES

RADIORECORDER

Filed Sept. 23, 1921

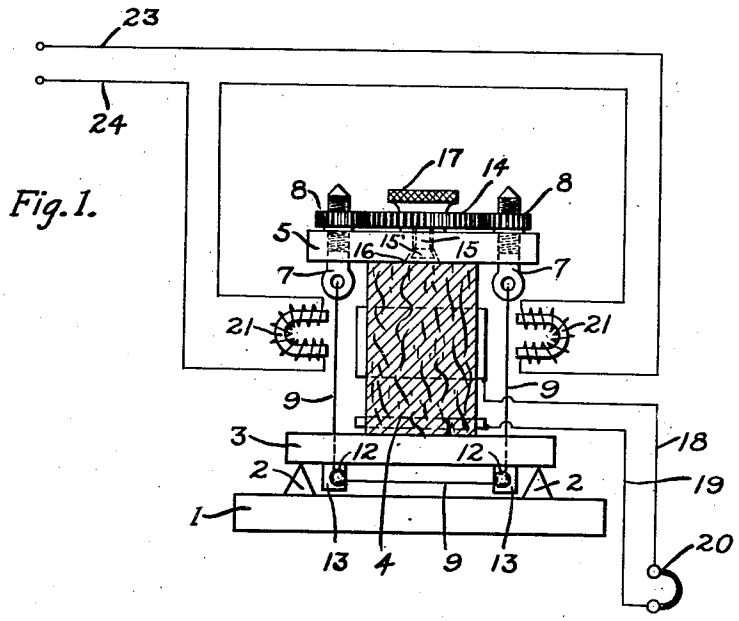

Fig. 1.

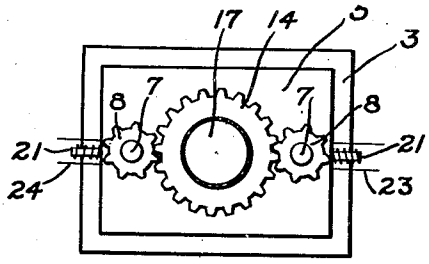

Fig. 2.

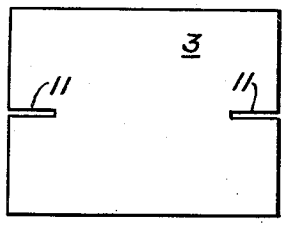

Fig. 3.

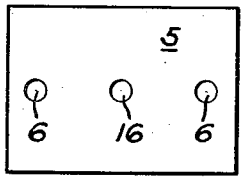

Fig. 4.

WITNESSES:
P. H. Cook.
O. F. Buchanan

INVENTOR
Harry P. Sparkes.
BY
Wesley Sloan
ATTORNEY

Patented June 14, 1927. 1,632,150

UNITED STATES PATENT OFFICE.

HARRY P. SPARKES, OF EDGEWOOD PARK, PENNSYLVANIA, ASSIGNOR TO WESTINGHOUSE ELECTRIC & MANUFACTURING COMPANY, A CORPORATION OF PENNSYLVANIA.

RADIORECORDER.

Application filed September 23, 1921. Serial No. 502,645.

My invention relates to receiving systems and particularly to receiving systems employing crystals exhibiting the piezo-electric effect.

An object of my invention is to enable a crystal exhibiting the piezo-electric effect to be employed in circuit with a recorder so that it may be made to control a recording pen or other translating device.

Another object of my invention is to provide means for adjusting the tension upon the crystal to change the period of resonance of the detector.

Certain crystals liberate electricity when stress is applied to them, or when there is a change in the applied stress. This phenomenon is found in hemihedral or hemimorphous crystals, possessing either the asymmetric arrangement of the atoms in an organic molecule such as the tartrates, sugar, camphor, etc. or the asymmetric arrangement of mineral molecules such as quartz, tourmaline, boracite, etc.

Rochelle-salt crystals have been found to exhibit great piezo-electric activity. Formerly, where Rochelle-salt crystals have been employed as receivers, there has been no method of quickly adjusting the resonant frequency of the receiver. Moreover, there has been devised no efficient method of employing a crystal exhibiting the piezo-electric effect to operate a recorder, since, ordinarily, the received electro-motive forces have been employed to produce distortion of the crystal, which distortion acted mechanically to vibrate a diaphragm and produce sounds.

I employ a Rochelle salt or other crystal exhibiting the piezo-electric effect, said crystal being provided with vibratory variable-tension means of which the natural period of mechanical vibration may be varied. Pulsating signal currents are caused to set the tension means in vibration, thereby generating, in the crystal, currents which may be utilized to operate a recording or translating device.

Other objects of my invention reside in details of construction described in the following description and disclosed in the accompanying drawing, wherein

Fig. 1 is a diagrammatic view illustrative of a receiving system employing a piezo-electric crystal in accordance with my invention.

Fig. 2 is a top plan view of the mounting for the crystal.

Fig. 3 is a detail of the base member of the mounting.

Fig. 4 is a detail of the top member of the mounting.

Mounted upon a support 1 are supports 2 upon which rests a base member 3 adapted to support a Rochelle-salt crystal 4. It is to be understood that I may employ a Rochelle-salt crystal or any other crystal exhibiting the piezo-electric effect. The base member 3 is of any suitable insulating material, such as micarta or bakelite. The crystal 4 is provided with a top member 5 of a material similar to that used in the construction of the base member 3. The top member 5 is provided with apertures 6 through which pass bolts 7 having screw-threaded ends carrying geared nuts 8.

To the bolts 7 are secured the ends of a metallic strip or wire 9 of magnetic material, said strip passing through slots 11 in the base member 3 and over rollers 12 mounted on supports 13 fastened to the under side of the base member. Meshing with the geared nuts 8, is an adjusting gear 14 mounted upon a shaft 15 fitting into an aperture 16 provided in the top member. A bolt 15', threaded on the end of the shaft 15, prevents the displacement of the adjusting gear 14. The adjusting gear is provided with a milled head 17, for facilitating the rotation of the adjusting gear to operate the geared nuts in order to vary the tension on the magnetic strip 9.

Electrically connected to the center of the crystal 4 is a lead 18, and electrically connected to one end of the crystal is a lead 19. The leads 18 and 19 may pass to a high-voltage relay which acts as a controller for a recording pen or may be connected to telephone receivers. In the present instance,

I have shown them connected to telephone receivers in order to simplify the explanation of the invention but it is to be distinctly understood that my system is adapted for use in operating a controller for a recording pen or other recording or detecting apparatus.

In close relation to the magnetic metallic strip 9, are electro-magnets 21 in series with leads 23 and 24 connected to some source of received oscillations, such as the antenna system of a wireless receiving station.

Upon the passage of undulatory electric current, such as is produced by heterodyned received waves, or by waves impressed with any oscillations below radio frequency, the electro-magnets 21 operate to attract and repel the magnetic metallic strip or wire 9 in accordance with the received oscillations.

The milled head 17 of the adjusting gear 14 has been turned to adjust the detector to resonance for the received frequency, which is accomplished by increasing or decreasing the tension on the magnetic metallic strip 9. The strip 9 is thus set in vibration, and each received set of oscillations produces changes in the stress applied to the crystal 4. These changes in stress produce currents in the leads 18 and 19 connected to the center and end respectively of the crystal 4. This current may be used, as before stated, to operate a high-voltage relay, such as a controller for a recorder pen, but, in the present instance, I have shown it as operating a set of telephone receivers 20.

My detecting system has the peculiar advantage that the detectors may be made resonant to any desired frequency by a simple turning of the milled head operating the adjusting gear. Moreover, by causing the received oscillations to attract and repel the tensioning strip, undulatory current is produced in the leads connected to the center and end of the crystal by reason of the changes in stress, and this undulatory current may be used to operate any suitable recording or detecting apparatus.

I claim as my invention:

1. A detector of undulatory current comprising a crystal exhibiting the piezo-electric effect, a magnetizable tensioning member producing stress in the crystal, electro-magnets in the circuit with the undulatory current in operative position to the magnetizable tensioning member, and means for detecting the electromotive forces set up by the changes in stress.

2. A mounting for a crystal exhibiting the piezo-electric effect comprising a crystal, a top member for the crystal, a base member for the crystal, a strip having both ends thereof attached to the top member, said strip being slidably associated with the base member, and means for tensioning the strip to produce stress in the crystal.

3. A mounting for a crystal exhibiting the piezo-electric effect comprising a crystal, a top member for the crystal, a base member for the crystal, a strip having both ends thereof attached to the top member, means on the base member over which the strip passes allowing free longitudinal movement of the strip, means for tensioning the strip to produce stress in the crystal, and means operable upon at least one of the side portions of said strip for varying the tension thereof.

4. A mounting for a crystal exhibiting the piezo-electric effect comprising a crystal, a top member for the crystal, a base member for the crystal, a strip having both ends thereof attached to the top member, pulleys on the base member over which the strip passes to allow free longitudinal movement of the strip, and means for tensioning the strip to produce stress in the crystal.

5. A mounting for a crystal exhibiting the piezo-electric effect comprising a crystal, a top member for the crystal, a base member for the crystal, a strip having both ends thereof attached to the top member, said strip being mechanically associated with the base member, and means for simultaneously tensioning both ends of the strip.

6. A mounting for a crystal exhibiting the piezo-electric effect comprising a crystal, a top member for the crystal, a base member for the crystal, bolts on the top member, a metallic strip attached at the respective ends thereof to said bolts and mechanically associated with the base, geared nuts on the bolts, an adjusting gear meshing with the geared nuts, and means for operating the adjusting gear.

7. A detector of undulatory current comprising a crystal exhibiting piezo-electric effects, magnetizable tensioning means producing stress in the crystal, electro-magnets in circuit with the undulatory current in operative position to the magnetizable tensioning means, leads connected to points of the crystal exhibiting difference in potential under change in stress, and means for detecting the flow of the current in the leads.

8. A pulsating-current generator including a piezo-electric crystal, vibratory means for stressing the same, means for causing said vibratory means to vibrate at substantially its natural period of vibration, and means for withdrawing the piezo-electric current from the crystal.

9. The step in the method of generating pulsating currents by means of a piezo-electric crystal and a vibratory member for stressing the same, which consists in causing said member to vibrate at substantially its natural period of vibration.

10. An electrical system comprising a source of relatively low-tension pulsating currents, a piezo-electric crystal, a mechanically vibratory member for stressing the same, the natural period of vibration of said member corresponding to said pulsations, electro-magnetic means responsive to said source-currents for vibrating said member, means for withdrawing the piezo-electric currents from said crystal, and a translating device energized by said piezo-electric currents.

In testimony whereof, I have hereunto subscribed my name this 31st day of August, 1921.

HARRY P. SPARKES.