Sept. 12, 1939. S. M. ABBOTT 2,172,949

SUCTION EVACUATOR FOR SURGICAL AND SIMILAR OPERATIONS

Filed July 1, 1938 3 Sheets-Sheet 1

Fig. 1.

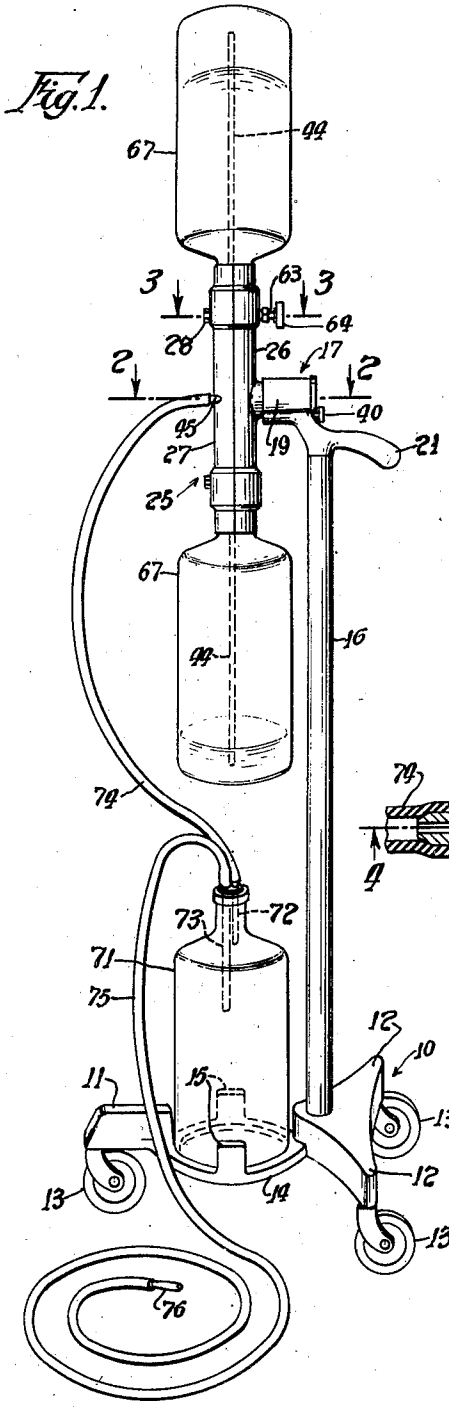

Fig. 3.

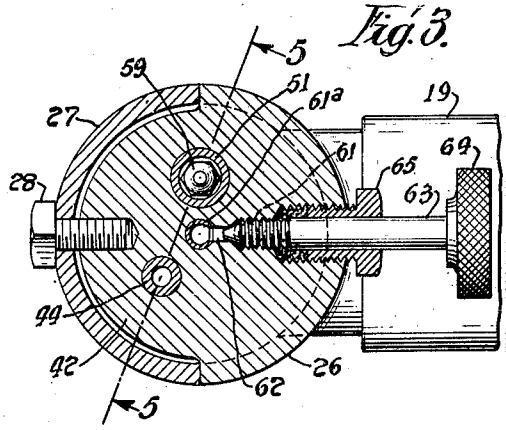

Fig. 2.

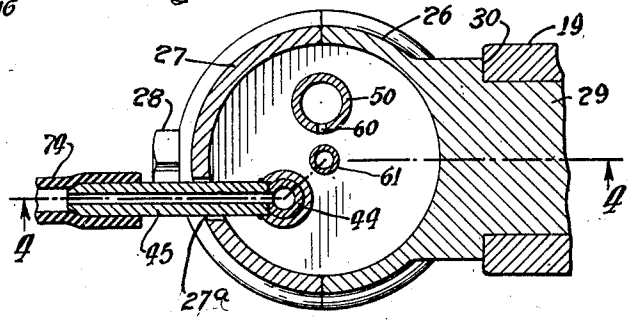

Inventor:
Scott M. Abbott,
By: Arthur W. Nelson
Attorney.

Sept. 12, 1939. S. M. ABBOTT 2,172,949

SUCTION EVACUATOR FOR SURGICAL AND SIMILAR OPERATIONS

Filed July 1, 1938 3 Sheets-Sheet 2

Fig. 4.

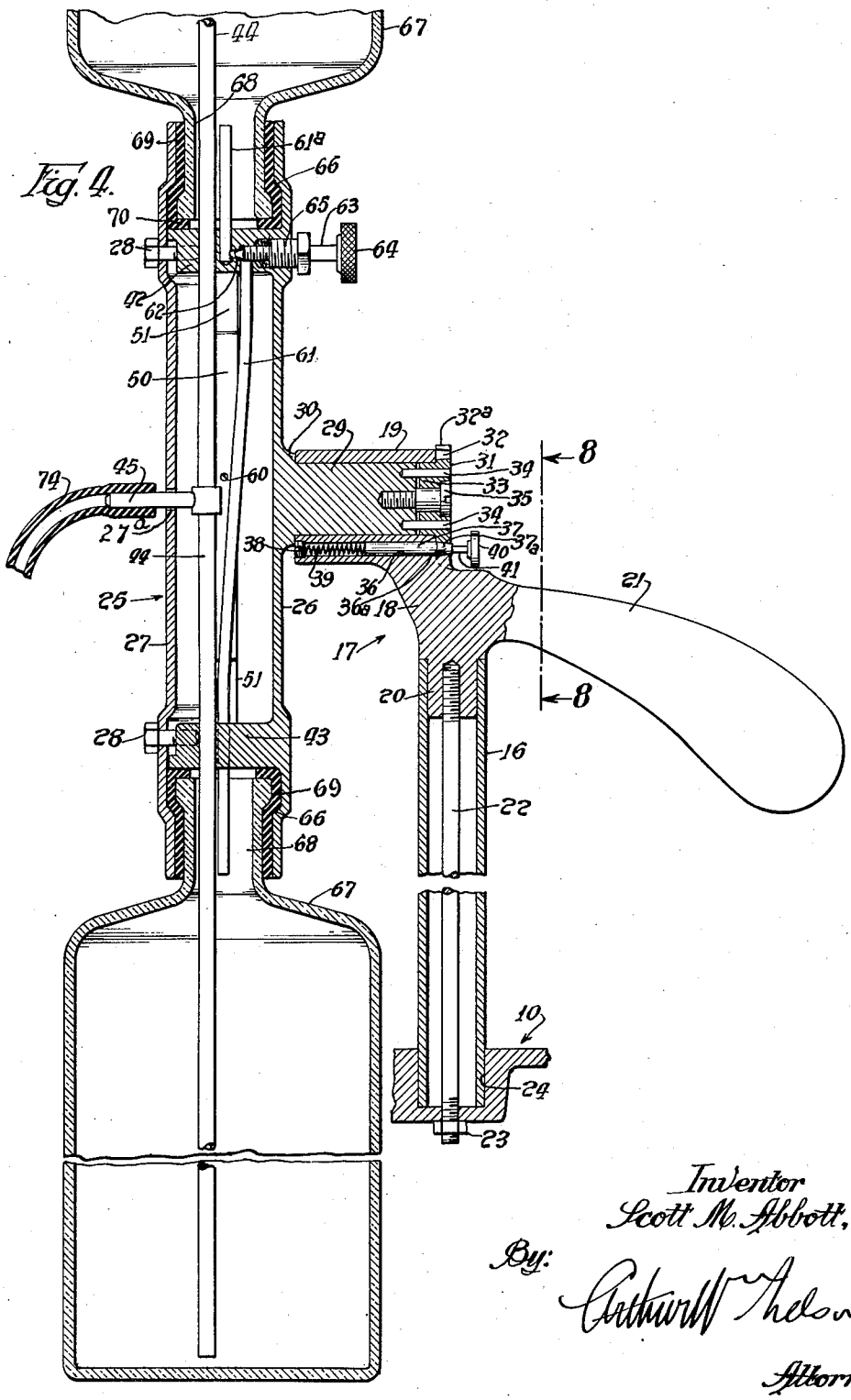

Inventor
Scott M. Abbott,

By: Arthur W. Nelson

Attorney.

Sept. 12, 1939. S. M. ABBOTT 2,172,949

SUCTION EVACUATOR FOR SURGICAL AND SIMILAR OPERATIONS

Filed July 1, 1938 3 Sheets-Sheet 3

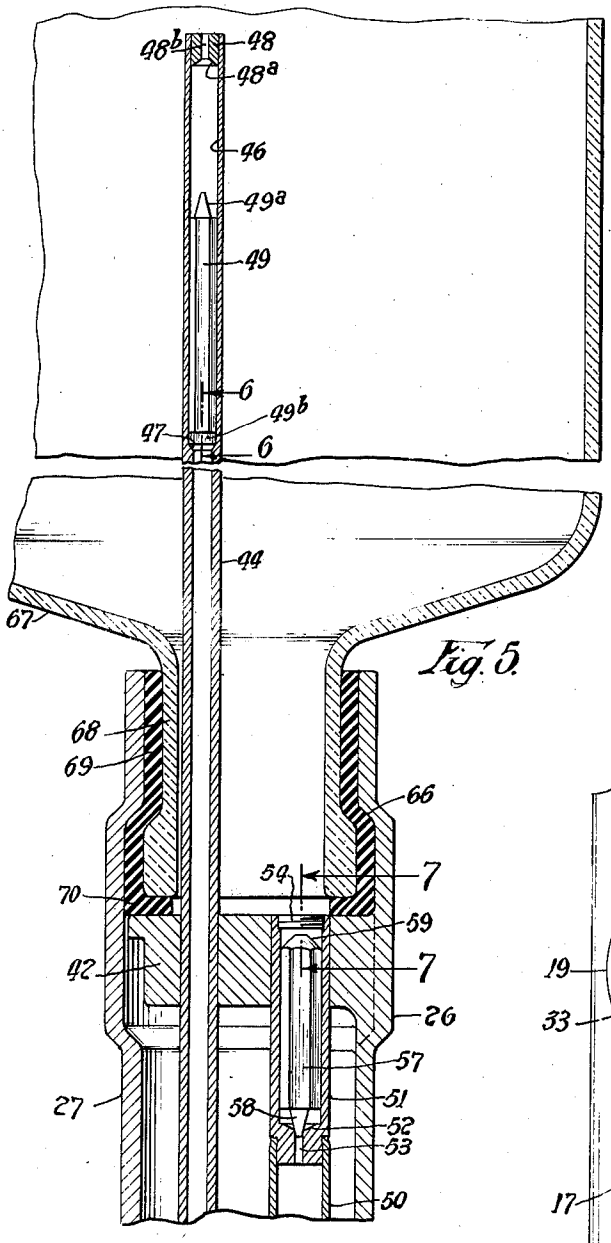

Fig. 5.

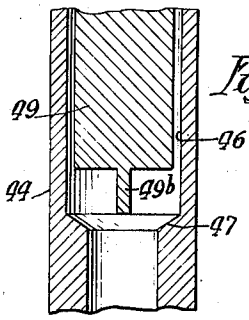

Fig. 6.

Fig. 7.

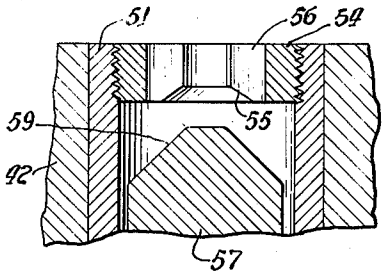

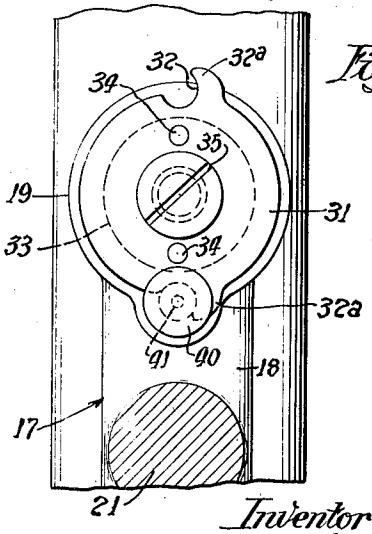

Fig. 8.

Inventor
Scott M. Abbott,
By:
Arthur W. Nelson
Attorney.

Patented Sept. 12, 1939

2,172,949

UNITED STATES PATENT OFFICE

2,172,949

SUCTION EVACUATOR FOR SURGICAL AND SIMILAR OPERATIONS

Scott M. Abbott, Chicago, Ill., assignor to The Burrows Company, Chicago, Ill., a corporation of Illinois

Application July 1, 1938, Serial No. 216,928

6 Claims. (Cl. 230—75)

This invention relates to improvements in suction evacuators for surgical and similar operations and it consists of the matters hereinafter described and more particularly pointed out in the appended claims.

The improved evacuator is one especially adapted for use in surgical and similar operating practice and utilizes the Wangensteen principle of creating suction by means of water flowing from a bottle at one elevation to another bottle directly below the same.

One of the objects of the present invention is to provide an evacuator apparatus of this kind which is more simple in construction and more efficient in operation than apparatus of this kind heretofore available.

Another object of the invention is to provide an appartus of this kind wherein the valve action is automatic so as to require no manual setting and resetting thereof as the liquid containers, usually bottles, are swung into reversed positions.

A further object of the invention is to provide apparatus of this kind, which is more stable against tipping over while reversing the positions of the liquid containers.

Again, it is an object of the invention to provide apparatus of this kind wherein it is possible to bring the two liquid containers into closer relationship, thus reducing the leverages afforded by said containers and the tendency toward lateral tipping in reversing the positions of the said containers.

The above mentioned objects of the invention, as well as others, together with the advantages thereof will more fully appear as the specification proceeds.

In the drawings:

Fig. 1 is a perspective view of a suction evacuator apparatus embodying the preferred form of the invention.

Fig. 2 is a horizontal sectional view through the valve head end of the apparatus, on an enlarged scale as taken on the line 2—2 of Fig. 1.

Fig. 3 is a horizontal sectional view through the apparatus as taken on the line 3—3 of Fig. 1.

Fig. 4 is a vertical sectional view through the valve head end and a part of the base end of the apparatus as taken on the line 4—4 of Fig. 2.

Fig. 5 is a detail vertical sectional view through a part of the apparatus as taken on the line 5—5 of Fig. 3.

Fig. 6 is another sectional view through a part of the apparatus, on a further enlarged scale as taken on the line 6—6 of Fig. 5.

Fig. 7 is a vertical detail sectional view through a part of the apparatus, on the scale of Fig. 6, as taken on the line 7—7 of Fig. 5.

Fig. 8 is a detail vertical sectional view through a part of the head end of the apparatus, on a somewhat enlarged scale, as taken on the line 8—8 of Fig. 4.

The improved apparatus is herein illustrated and described as one utilizing the so-called Wangensteen principle of creating suction or pressure by means of a liquid, such as water, flowing by gravity from one container to another directly beneath the first one, the containers being reversible from one position to another, when the topmost container becomes empty. The action of the fluid, as it flows through a certain valve mechanism between the containers is to produce a vacuous condition or subatmospheric pressure in the first mentioned container, and which vacuous condition or subatmospheric pressure manifests itself in the service tube applied to the patient, as a gentle but positive suction which is not injurious to body tissues. Apparatus of this kind is especially adapted for use in surgical and similar operations for the continuous evacuation of fluids and gases from different parts of the patient's body, but it may be used in other instances where mild suction effects are desired.

Referring now in detail to that embodiment of the invention illustrated in the accompanying drawings, 10 indicates the base of the apparatus which as shown herein includes a central portion from which radiate a front leg 11 and a pair of laterally and slightly rearwardly portions 12—12 respectively. A swiveling caster wheel 13 is secured to the outer end of said leg 11 and to the outer end of said portions 12—12 whereby the apparatus as a whole is easily movable from place to place as is necessary. The front leg 11 is formed at its mid portion as a platform 14 of a relatively low elevation for the support of a container, as will later appear, the platform having upright portions 15 at its opposite sides whereby the container before mentioned is restrained against lateral displacement.

A tubular standard 16 rises from the central portion of the base and carries a head piece 17 at its top end. This head piece comprises a body portion 18 having a top end lateral tubular extension or sleeve 19 at one side, a bottom end extension 20 of reduced diameter and a lateral handle or grip 21 at its mid portion on that side of the body opposite the extension or sleeve 19. The bottom end extension 20 fits snugly in the top end of the tubular standard, with the tubular extension or sleeve 19 arranged in line with the

front leg 11 of the base. A rod 22 is disposed axially in the standard and its top end has a threaded engagement in the extension 20 while its bottom end extends through the central portion of the base 10. A nut 23 is threaded onto the last mentioned end of the rod to engage the bottom surface of the base. When this nut is drawn up tight on the rod, the base, the standard and the head piece are tightly secured together as a rigid unitary structure. To provide for a better engagement between the bottom end of the standard and the base, the body portion of the latter is made with a recess 24 to receive the former as best appears in Fig. 4.

25 indicates a combined container support and valve casing, which is rotatively mounted with respect to the head 17 for a turning movement about a horizontal axis from one vertical position to another vertical position. As shown herein, said combined support and casing is of the split type and includes a rear portion 26 and a front portion 27, both of said portions being substantially semi-cylindrical and secured together at their meeting faces by the bolts 28. The portion 26 is provided at a point between its ends with a rearwardly extending trunnion 29 that has a fairly snug turning fit in the sleeve 19 of the head piece 17 before mentioned.

To secure the trunnion against endwise displacement from the sleeve 19 I provide the following structure. At the front end of the trunnion is a shoulder 30 with which the front end of the sleeve engages. At the rear end of the trunnion is a disk 31 having oppositely disposed recesses 32—32 in its edges. On one side of each recess is a stop shoulder 32*a* (see Fig. 8) the purpose of which will later appear. This disk has a part 33 of reduced diameter (see Fig. 4) to fit in the rear end of the sleeve 19 and this part carries a pair of forwardly projecting studs 34 for engagement in associated recesses in the rear end of the trunnion. A screw 35 passes axially through the disk 31 for a threaded engagement in the end of the trunnion and the head of the screw seats in a recess in the disk to provide a flush surface for the latter. It is apparent that by tightening up on the screw 35, the turning action of the trunnion 29 in the sleeve may be regulated as desired.

In the sleeve 19 below the trunnion 29 and vertically in line with the axis thereof, is an open ended passageway 36, the rear end of said passage being tapered as at 36*a* (see Fig. 4). The top side of the tapered end of said passage coincides with the positions of one or the other of the recesses 32 in the disk 31. A plunger 37 is disposed in the rear end of the recess 36 and is formed with a tapered portion 37*a* to fit in the tapered portion 36*a* of the recess 36. The front end of this recess is closed by a plug 38 and a spring 39 is disposed in said recess between said plug and the plunger and which spring normally holds the plunger in the position shown in Fig. 4. The plunger 36 is formed at its outer end with a push button 40 connected to the plunger by a neck 41 of reduced diameter and by which the plunger may be moved into the recess against the action of the spring 39. In its normal position the tapered end 37*a* of the plunger engages in one or the other of the recesses 32 in the disk 31 so as to prevent the turning of the trunnion 29 in the sleeve 19. When the plunger 37 is depressed the reduced diameter neck 41 of the plunger is brought into line with the disk 31 so that the disk is unlocked to permit the turning of the trunnion in the sleeve 19, preferably through an arc of 180°. After the plunger is released, the spring 39 returns it to its normal position to engage in the other recess, now at the bottom edge of the disk. By reason of the stop shoulders 32*a*, the trunnion 29 may be turned in one direction through 180° from one position to the other and then turned in the opposite direction through 180° back to the first position.

The rear portion 26 of the combined container support and valve casing 25 is provided with a pair of longitudinally spaced bosses 42—43 respectively, so formed as substantially to engage and close against portions of the inner hemispherical face of the front portion 27 of the casing as best appears in Fig. 4. A metal tube 44 extends through a considerable distance beyond each boss 42—43, toward the front thereof. A forwardly extending nipple 45 is fixed to the tube 44 slightly to one side of the axis of the trunnion 29 as appears in Fig. 2 so as to communicate with the interior of the tube 44. The nipple 45 passes through an opening 27*a* in the front portion 27 of the combined support and casing 25 and this opening is made large enough to provide atmospheric communication between the inside and the outside of said casing.

Each end of the tube 44 is enlarged internally to provide a valve chamber 46, one of which is shown in Fig. 5. At the inner end of each valve chamber is formed a valve stop or shoulder 47 formed by the junction of the meeting ends of the two internal parts of different diameters of the tube. In the outer end of each valve chamber is a valve plug 48, the inner end of which is formed as a valve seat 48*a*, the plug having an axial aperture 48*b* therein to provide for the entrance of air into said valve chamber. A valve member 49 is arranged in said chamber. This valve member which is shorter in length than the valve chamber has a hexagonal cross section and is of such a diameter that its corners have a sliding engagement with the internal surface of the chamber.

The outer end of the valve member 49 is formed as a head 49*a* for engagement on the seat 48*a* before mentioned and the inner end of the valve member is made as a transverse rib 49*b* for engagement upon the junction or shoulder 47 before mentioned. It is to be understood that when the valve member in the uppermost end of the tube 44 is in one position wherein its rib 49*b* is engaged on the associated junction or shoulder 47, the valve member in the lowermost end of the tube is in the other position wherein its head 49*a* is engaged on the seat 48*a* of the associated plug 48.

When the position of the uppermost and the lowermost ends of the tube 44 are reversed, the positions of the valve members 49 are reversed. Thus the lowermost end of the tube 44 is always closed and the uppermost end of the tube is always open. It is apparent that air may pass from the nipple 45 up through the tube 44 into the chamber 46 at the uppermost end of the tube and out through the passage 48*b*. By reason of the cross sectional shape of the valve member 49, it is apparent that passages are present between the flat sides of the valve member and the interior of the chamber 46 for the passage of air past the valve member. It is also pointed out that by reason of the engagement of the rib 49*b* at the inner end of the valve member with the junction or shoulder 47, the valve member 49

cannot at any time so engage or seat against the shoulder 47 as to close off the inner end of the chamber 46.

An air relief tube 50 is disposed in the support and casing 25 between the bosses 42—43 slightly to one side of the axis of the casing as best appears in Figs. 2 and 3. The ends of this relief tube are fixed pressure-tight in tubular valve housings 51, each housing in itself being fixed in an associated boss 42—43. As best appears in Fig. 5 each housing is in the form of a short length of tubing. That end of the housing fixed to the tube 50 is formed with a valve centering seat 52 and an orifice 53 which affords communication between the housing and tube. In the opposite end of the housing is a plug 54 having a valve centering seat 55 on its inner end, there being an orifice 56 (see Fig. 7) through the plug for the entrance of air into the housing.

A gravity movable valve member 57 is arranged in the housing. This member which is of a length less than that of the housing, is also of a hexagonal shape and the corners thereof engage the inner surface of the housing for guided movement. The inner end of said valve member is provided with a valve stem 58 for cooperation with the orifice 53 before mentioned for opening and closing the same. The outer end of said valve member is tapered off as at 59 for engagement with the centering seat 55. At about the mid portion of the tube 50 is located an opening 60 (see Fig. 4) whereby air may escape from said tube into the interior of the casing 25 and then out to atmosphere through the opening 27*a* before mentioned.

61 indicates a water passage tube having one end fixed in the boss 42 and having its other end extending through and beyond the other boss 43 as best appears in Fig. 4. In the boss 42 is a transverse passage 62 which connects the associated end of the tube 61 with a tube extension 61*a* fixed in said boss. A valve stem 63 is provided in the boss 42 in a manner to control the volume of water that is permitted to flow through the tube 61 and its extension. This stem opens through the rear side of the casing member 26 and is there provided with a knob 64 for manipulation, the stem passing through a suitable packing gland 65 in the casing part 26 at this point.

The internal end parts of the casing portions 26—27 are so formed as to coact in providing shoulder recesses 66—66 each to receive the associated end of a pair of liquid containers 67—67. As shown herein said containers are in the form of glass bottles having a capacity of about one gallon. Each bottle has a shouldered neck 68. A sealing gasket 69 is applied to the neck of each container. This gasket is preferably made of a yieldable material such as rubber and is of such shape as to fill the associated recess 66. Each gasket includes a portion 70 for engagement upon the associated end surface of the boss 42—43 of the casing part 26. These gaskets prevent direct engagement between the glass of the container necks and the metal of the casing portions 26—27. When the screws 28 which connect the casing portions 26—27 together are drawn up tight, the gaskets are compressed in a manner not only to provide a good strong operative supporting connection between the containers and the casing parts 26—27 but also a good water-tight connection for said containers with respect to the said casing parts. When the containers are in operative engagement in said casing parts, as above mentioned, the ends of the tube 44 extend one into each container, nonaxially, so as to terminate adjacent the outer or bottom end of each container as best appears in Figs. 1 and 4 respectively.

A body fluid receiver and container 71 in the form of a glass bottle similar to the bottles 67—67 before mentioned, is disposed with its bottom end engaged upon the platform 14 as formed in the front leg 11 of the base 10. In the top neck end of said container is a stopper in which is anchored a pair of nipples or tubular stems 72—73 respectively. A flexible hose-like service tube 74 of relatively small diameter is connected at one end to the nipple 72 and is connected at its other end to the nipple 45 extending outwardly from the casing portion 27. A second flexible hose 75 similar to the hose 74 just above mentioned is connected at one end to the nipple 73 and its other end carries a hollow needle or trocar 76 for insertion into that cavity of the patient's body requiring evacuation or drainage. Ordinarily the body fluid receiver 71 contains a body fluid diluting liquid.

Assume that after a period of use, the liquid associated with the containers 67—67 has all drained into the bottommost container and that it is desired to continue the suction action of the apparatus. With one hand grasping the handle 21, the thumb of that hand is employed to press the plunger button 40 inwardly to bring the neck 41 of the plunger 37 in line with the disk 31. This unlocks the disk and the trunnion 29. The combined container support and valve casing is now turned end-for-end in a direction so that the disk shoulder 32*a* heretofore associated with the plunger 37 moves away from said plunger, so that the filled container is brought to the top. When the plunger 37 is released, it returns outwardly and enters the other recess 32 to lock the valve casing 25 in this position, the other shoulder 32*a* preventing movement beyond said position. In this turning movement of the containers, the valve members 49 slide downwardly in their associated valve chambers 46—46 at the ends of the tube 44 so that said valve members operate to open the uppermost end of the tube 44 and to close off the bottommost end of said tube. This movement of the valve members 49 thus opens communication between the nipple 45 and the interior of the now topmost container and closes off communication between the nipple 45 and the interior of the bottommost container. Also in this turning movement of the containers, the valve member 57 in the top chamber 51 closes off the top end of the tube 50 and the valve member 57 in the bottom chamber 51 opens the bottom end of the tube 50.

With the parts in the position shown in Fig. 4, liquid in the top container now flows through the tube extension 61*a*, passage 62 and tube 61 into the bottom container. The air displaced from said bottom container passes up through the bottom end of the tube 50. As the top end of said tube is closed by the associated valve member 57, said air passes out through the port 60 into the casing as afforded by the portions 26—27 and out through the opening 27[a] to atmosphere. As the water flows from the top container, a subatmospheric pressure is produced therein, which is exerted through the tube 44 in the top container, nipple 45, hose 74, container 71, hose 75 and hollow needle or trocar 76. With the needle or trocar inserted in a body cavity, subatmospheric pressure induces a mild suction action in said cavity to draw fluid therefrom which

is caught and retained by the container 71. To regulate the suction produced by the apparatus, it is only necessary to control the flow of liquid from one container to the other and this may be done by manipulating the valve stem 63. When the top bottle becomes empty and it is desired to maintain the suction action, it is only necessary again to reverse the positions of the containers as before described. By reason of the shoulder 32*a*, the container support 25, when turned from one position to the other and back to the first position, must be turned in one direction and then in the opposite direction. Thus, it is impossible to turn the support about its axis to an extent which will twist the service tube to cause a closing thereof.

It is to be noted that the containers 67 are securely connected at their neck ends to the casing 25. This reduces the leverage as afforded by said containers to a minimum so that it is an easy matter to reverse the positions of the container. Also, by this construction, the tendency of the apparatus to tip laterally in moving the containers from one position to another is materially lessened. Thus, the spread of the base may be made smaller so that the apparatus may be more conveniently stored during periods of non-use.

Again, with the apparatus made as described, fewer parts are required so that the apparatus may be produced at a lower cost and without a sacrifice in operating efficiency. It is to be noticed that the leg 11 of the base extends forwardly of the standard 16 and is formed with a platform for the body fluid container. This arranges all containers in line and makes the base more stable. Also, it makes it possible more easily to wheel the apparatus about upon the casters 13 on the base 10.

While in describing the invention, I have referred in detail to the form, arrangement and construction of the various parts, the same is to be considered only in the illustrative sense so that I do not wish to be limited thereto except as may be specifically set forth in the appended claims.

I claim as my invention:

1. Apparatus of the kind described embodying therein means providing a support, means for holding a pair of liquid containers in opposed end-to-end relation and comprising a plurality of parts clamped in embracing relation upon the opposed ends of said liquid containers, means providing a horizontal pivotal connection for said holding means with respect to said support and about which said holding means may be turned to bring the desired container to the top, means arranged between the opposed ends of said containers and within said holding means and providing a plurality of passages therein, one of said passages providing for the flow of liquid therethrough from the top container into the bottom one, a suction tube in said holding means and having end portions extending into each container, means providing gravity movable valve mechanism associated with said suction tube for closing off the bottom end of the suction tube and for opening the top end thereof, means providing service tube connection with said suction tube at a point between its ends, and means in another one of said passages for automatically closing off the top end thereof and for opening the bottom end thereof.

2. In an apparatus of the kind described, means for holding a pair of liquid containers in opposed end-to-end relation and comprising a plurality of separable parts formed at each end for operative connection with an associated container end, a trunnion on one of said parts arranged at a right angle to the plane of the axis of said holding means, means in said separable parts providing a plurality of passages and a suction tube extending in the general direction of the axis of said holding means, the ends of said suction tube being adapted to extend into the associated container, means providing a gravity actuated valve mechanism in said suction tube and operating automatically to close off the bottom end of the tube and to open the top end thereof, there being a lateral passage connected to said tube for connection with a service tube, one of said passages being a liquid passage connecting said containers, and the other one of said passages being provided at its ends with valve mechanism normally tending to close the top end thereof and to open the bottom end thereof.

3. In an apparatus of the kind described, means for holding a pair of liquid containers in opposed end-to-end relation and comprising a plurality of separable parts formed at each end for operative connection with an associated container end, a trunnion on one of said parts arranged at a right angle to the plane of the axis of said holding means, means in said separable parts providing a plurality of passages and a suction tube extending in the general direction of the axis of said holding means, the ends of said suction tube being adapted to extend into the associated container, means providing a gravity actuated valve mechanism in said suction tube and operating automatically to close off the bottom end of the tube and to open the top end thereof, there being a lateral passage connected to said tube for connection with a service tube, one of said passages being a liquid passageway connecting said containers and the other one of said passages being provided at its ends with valve mechanism normally tending to close the top end thereof and to open the bottom end thereof, and means for controlling the passage of liquid through said one of said passages.

4. In an apparatus of the kind described, means providing a support including a horizontally extending part, a valve casing also including a horizontally extending part operatively engaged with the first mentioned horizontal part to provide a pivotal connection about which the valve casing may be turned from one position to another, means providing an operative connection for a pair of liquid containers with opposite points of the valve casing, means for the connection of a service tube with said valve casing, means in said valve casing providing a plurality of passages and a suction tube therein, one of said passages providing for the flow of liquid therethrough from the top container into the bottom one, the ends of said tube being adapted to communicate with an associated container, and a mid portion of said tube being operatively connected to said service tube, means providing a gravity actuated valve mechanism operatively associated with said suction tube for opening and closing the ends of the same and means in another of said passages for automatically closing off the top end thereof and for opening the bottom end thereof.

5. In an apparatus of the kind described, means providing a support including a horizontally extending part, a valve casing also including a horizontally extending part operatively en-

gaged with the first mentioned horizontal part to provide a pivotal connection about which the valve casing may be turned from one position to another, means providing an operative connection for a pair of liquid containers with opposite points of the valve casing, means for the connection of a service tube with said valve casing, means in said valve casing providing a plurality of passages and a suction tube therein, one of said passages providing for the flow of liquid therethrough from the top container into the bottom one, the ends of said tube being adapted to communicate with an associated container, a mid portion of the suction tube being connected to said service tube, means providing a valve mechanism including parts slidably arranged with respect to said suction tube for opening and closing the respective ends of the tube and means in another of said passages for automatically closing off the top end thereof and for opening the bottom end thereof.

6. In an apparatus of the kind described, means providing a support including a horizontally extending part, a valve casing also including a horizontally extending part operatively engaged with the first mentioned horizontal part to provide a pivotal connection about which the valve casing may be turned from one position to another, means providing an operative connection for a pair of liquid containers with opposite points of the valve casing, means for the connection of a service tube with said valve casing, means in said valve casing providing a plurality of passages and a suction tube therein, one of said passages providing for the flow of liquid therethrough from the top container into the bottom one, the ends of said tube being adapted to communicate with an associated container, a mid portion of the suction tube being connected to said service tube, means providing a gravity actuated valve mechanism associated with said suction tube for opening and closing the respective ends of the tube and another passage being formed at each end to provide a valve chamber, and a valve member in each chamber operating automatically to close off the top end of said last mentioned passage and to open the bottom end thereof.

SCOTT M. ABBOTT.