PCT

WORLD INTELLECTUAL PROPERTY ORGANIZATION
International Bureau

INTERNATIONAL APPLICATION PUBLISHED UNDER THE PATENT COOPERATION TREATY (PCT)

(51) International Patent Classification 6 : H01Q 1/32, 1/36, 9/30

A1

(11) International Publication Number: WO 98/24143

(43) International Publication Date: 4 June 1998 (04.06.98)

(21) International Application Number: PCT/KR96/00266

(22) International Filing Date: 30 December 1996 (30.12.96)

(30) Priority Data:
1996/59953 29 November 1996 (29.11.96) KR

(71)(72) Applicant and Inventor: JUNG, Soon, Jo [KR/KR]; 1-1001, Daedong-daegyo Mansion #1, Daepyung-dong 1-ga, Youngdo-gu, Pusan-city (KR).

(74) Agent: JO, Eui, Je; E.J.JO & Associates, Dae Heung Building, Suite 301, 648-23, Yuksam-dong, Kangnam-ku, Seoul 135-081 (KR).

(81) Designated States: CA, JP, US, European patent (AT, BE, CH, DE, DK, ES, FI, FR, GB, GR, IE, IT, LU, MC, NL, PT, SE).

Published
With international search report.

(54) Title: THIN ANTENNAS

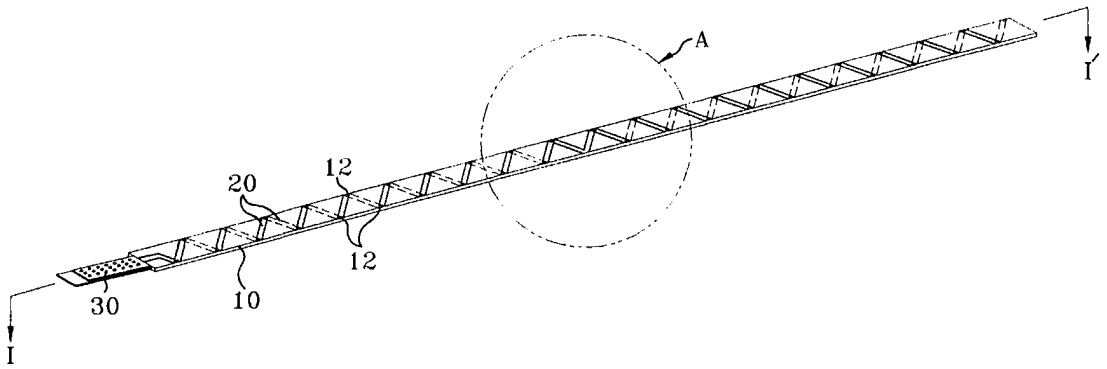

(57) Abstract

The present invention relates to a thin antenna in which an eletric conductor (20) of a helical shape is formed at a thin plate (10). The thin antenna has a construction that the thin plate (10) composed of an insulating material has a predetermined length and width, on which the electric conductor (20) of a helical shape is formed in the longitudinal direction through the front and rear of the thin plate (10). Accordingly, the antenna of the present invention provides convenience in use and an improved effect of a receiving gain.

FOR THE PURPOSES OF INFORMATION ONLY

Codes used to identify States party to the PCT on the front pages of pamphlets publishing international applications under the PCT.

AL	Albania	**ES**	Spain	**LS**	Lesotho	**SI**	Slovenia
AM	Armenia	**FI**	Finland	**LT**	Lithuania	**SK**	Slovakia
AT	Austria	**FR**	France	**LU**	Luxembourg	**SN**	Senegal
AU	Australia	**GA**	Gabon	**LV**	Latvia	**SZ**	Swaziland
AZ	Azerbaijan	**GB**	United Kingdom	**MC**	Monaco	**TD**	Chad
BA	Bosnia and Herzegovina	**GE**	Georgia	**MD**	Republic of Moldova	**TG**	Togo
BB	Barbados	**GH**	Ghana	**MG**	Madagascar	**TJ**	Tajikistan
BE	Belgium	**GN**	Guinea	**MK**	The former Yugoslav Republic of Macedonia	**TM**	Turkmenistan
BF	Burkina Faso	**GR**	Greece			**TR**	Turkey
BG	Bulgaria	**HU**	Hungary	**ML**	Mali	**TT**	Trinidad and Tobago
BJ	Benin	**IE**	Ireland	**MN**	Mongolia	**UA**	Ukraine
BR	Brazil	**IL**	Israel	**MR**	Mauritania	**UG**	Uganda
BY	Belarus	**IS**	Iceland	**MW**	Malawi	**US**	United States of America
CA	Canada	**IT**	Italy	**MX**	Mexico	**UZ**	Uzbekistan
CF	Central African Republic	**JP**	Japan	**NE**	Niger	**VN**	Viet Nam
CG	Congo	**KE**	Kenya	**NL**	Netherlands	**YU**	Yugoslavia
CH	Switzerland	**KG**	Kyrgyzstan	**NO**	Norway	**ZW**	Zimbabwe
CI	Côte d'Ivoire	**KP**	Democratic People's Republic of Korea	**NZ**	New Zealand		
CM	Cameroon			**PL**	Poland		
CN	China	**KR**	Republic of Korea	**PT**	Portugal		
CU	Cuba	**KZ**	Kazakstan	**RO**	Romania		
CZ	Czech Republic	**LC**	Saint Lucia	**RU**	Russian Federation		
DE	Germany	**LI**	Liechtenstein	**SD**	Sudan		
DK	Denmark	**LK**	Sri Lanka	**SE**	Sweden		
EE	Estonia	**LR**	Liberia	**SG**	Singapore		

THIN ANTENNAS

TECHNICAL FIELD

The present invention relates to a thin antenna, and more particularly a thin antenna which forms an electric conductor in a helical shape on a thin plate composed of a non-conductive material.

BACKGROUND ART

Generally, a whip antenna has been used as an antenna for personal vehicles. Such a whip antenna has drawbacks that produces a severe noise and causes breakdown due to an effect of the wind during vehicle's travelling to thereby shorten its lifetime. Furthermore, when the antenna is used for a long time, there are caused problems that the degree of its reception is reduced and the antenna gets out of order, due to insertion of different external substances between antenna poles protruded onto the outside of the vehicle.

Recently, a glass antenna formed with hot wires at the rear window of the vehicle is being used. However, the glass antenna has problems such as reduction of a directional receiving characteristic according to a travelling direction of the vehicle as well as complexity in design based on the exterior of the vehicle, which cause greater expenses.

DISCLOSURE OF INVENTION

To solve the above problems, it is an object of the present invention to provide a thin antenna.

Another object of the present invention is to provide a compact

lightweight thin antenna to achieve the lightness of vehicles.

Other object of the present invention is to provide an antenna which no noise is generated during operating like a power antenna.

Still other object of the present invention is to provide an antenna with no loss of battery due to dark current, and easy maintenance and repairs when the antenna is not operated

To accomplish the above object of the present invention, there is provided a thin antenna, the antenna comprising:

a thin plate composed of an insulating material, having a predetermined length and width; and

an electric conductor of a helical shape formed in the longitudinal direction through the front and rear of the thin plate.

Thin plate comprises a plurality of holes formed at both edges of the thin plate in the longitudinal direction, which are coated with a conductive material, in which the plurality of the holes are positioned opposite to each other in an approximately slash on both sides of the thin plate, and are connected with the electric conductor so that one single conductive path is made in the longitudinal direction from one end to the other end of the thin plate.

BRIEF DESCRIPTION OF THE DRAWINGS

FIG. 1 is a perspective view showing a thin antenna according to a preferred embodiment of the present invention;

FIG. 2 is a sectional view taken along a line I-I of FIG. 1;

FIG. 3 is an enlarged perspective view showing the front portion of part "A" of FIG. 1;

FIG. 4 is an enlarged perspective view showing the rear portion of part "A" of FIG. 1;

FIG. 5 is a perspective view showing a thin antenna according to another embodiment of the present invention; and

FIG. 6 is a graph comparing signal gains in a broadcasting frequency.

BEST MODE FOR CARRYING OUT THE INVENTION

A preferred embodiment of the present invention will be described below with reference to the accompanying drawings.

FIG. 1 is a perspective view showing a thin antenna according to a preferred embodiment of the present invention, FIG. 2 is a sectional view taken along a line I-I of FIG. 1, FIG. 3 is an enlarged perspective view showing the front portion of part "A" of FIG. 1, and FIG. 4 is an enlarged perspective view showing the rear portion of part "A" of FIG. 1. As shown, the thin antenna of the present invention comprises a thin plate 10 having a predetermined length and width, which is composed of an insulating material. The thin plate 10 includes an electric conductor 20 of a helical shape formed into the longitudinal direction at the front and rear thereof.

The thin plate 10 includes a plurality of holes 12 on both of edges along the longitudinal direction of the thin plate 10, which are coated with a conductive material. Each of the holes 12 positioned opposite to each other in an approximately slash at the front and rear of the thin plate 10 is connected with the electric conductor 20. At this time, the conductor 20 connects the holes 12 so that one single conductive path is made in the longitudinal direction from one end to the other end of the thin plate 10. Thus, since the conductor 20 forming one conductive path is alternately connected to the front and rear of the thin plate 10 through the holes 12 which are coated with a conductive material, the conductor 20 becomes a helical shape.

In order to produce the thin antenna of the present invention, a film is prepared, of which double faces covered with epoxy or synthetic resins are coated with a conductive material such as

aluminum or copper, and then the coated double-faced film is corroded so as to form a coil-shaped pattern. Next, edges of the pattern are drilled and coated with the conductive material, to thereby obtain both faces in a helical form by combination of the conductive patterns.

As another manufacturing method, a plurality of holes are formed on a synthetic resin coated with no conductors in a predetermined interval, and the both sides thereof is printed using conductive ink such as silver to generates an antenna pattern.

It is preferable that the width of the thin plate 10 is approximately 3~20㎜, and the length thereof is 10~300㎜ for the antenna. It is also preferable that an interval W between the holes 12 is 1~10㎜. Reference numeral 30 indicates a connection line for connecting the conductive path of the antenna to a mounting member.

FIG. 5 is a perspective view showing a thin antenna according to another embodiment of the present invention. This embodiment has the same construction as that of FIG. 1, but has an arrangement that the electric conductor 20 is extended to one end of the antenna, in place of the connection line 30 of FIG. 1. Further, am amplifier 40 for amplifying a signal is integrally incorporated at the extended end of the electric conductor 20.

FIG. 6 is a graph comparing signal gains in frequency band of a broadcasting signal. In FIG. 6, A indicates a receiving signal gain with regard to the antenna of the present invention, and B shows a gain with regard to the conventional whip antenna. As we can see from FIG. 6, the gain of the antenna according to the present invention is further improved.

As described above, the thin antenna in accordance with the present invention provides various advantages that improves a signal gain, achieve a compact lightweight antenna, and gives convenience in use as well as easiness in maintenance and repairs.

INDUSTRIAL APPLICABILITY

A thin antenna of the present invention is used for personal vehicles.

WHAT IS CLAIMED IS:

1. A thin antenna, comprising:

a thin plate (10), composed of an insulating material, having a predetermined length and width; and

an electric conductor (20) of a helical shape formed in the longitudinal direction through the front and rear of said thin plate (10).

2. The thin antenna as claimed in claim 1, wherein said thin plate (10) comprises a plurality of holes (12) formed at both edges of said thin plate (10) in the longitudinal direction, which are coated with a conductive material, wherein the plurality of said holes (12) are positioned opposite to each other in an approximately slash on both sides of said thin plate 10, and are connected with said electric conductor (20) so that one single conductive path is made in the longitudinal direction from one end to the other end of said thin plate (10).

3. The thin antenna as claimed in claim 1, wherein the width of said thin plate (10) is approximately 3~20㎜, and the length thereof is 10~300㎜.

4. The thin antenna as claimed in claim 1, wherein the interval between said holes (12) is 1~10㎜.

5. The thin antenna as claimed in claim 1 or 2, wherein said electric conductor (20) is wired in the opposite direction at the middle point for impedance matching.

6. The thin antenna as claimed in claim 1 or 2, wherein an electric conductor is extended to one end of said antenna.

7. The thin antenna as claimed in claim 6, further comprising an amplifier which is integrally incorporated with said electric conductor.

FIG. 1

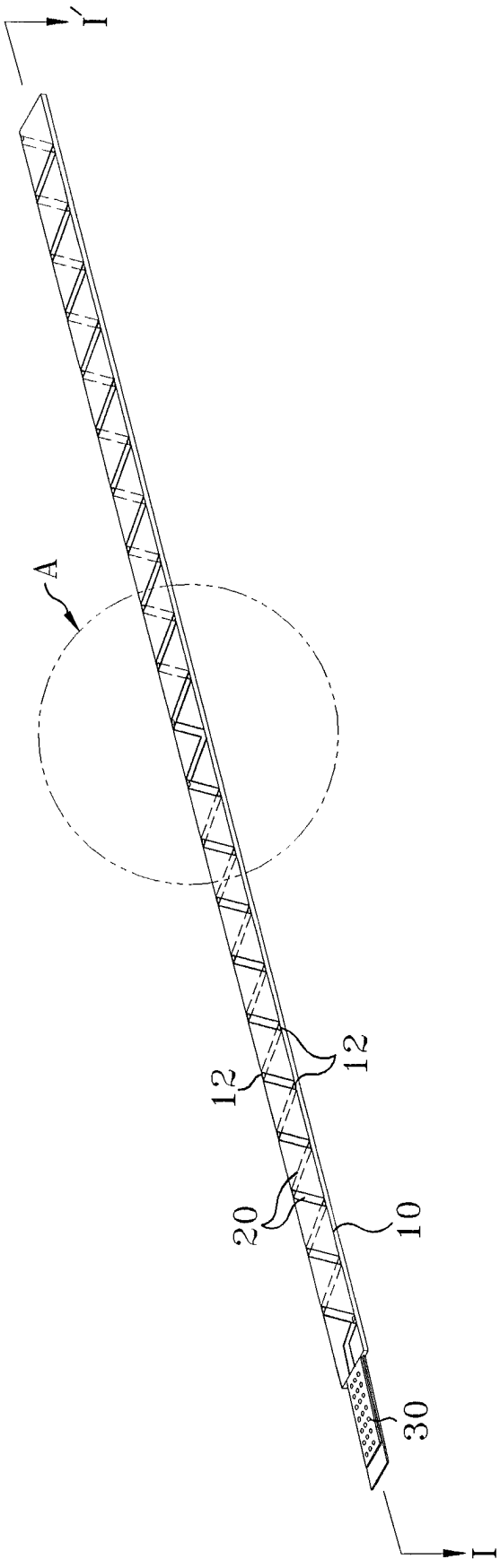

FIG. 2

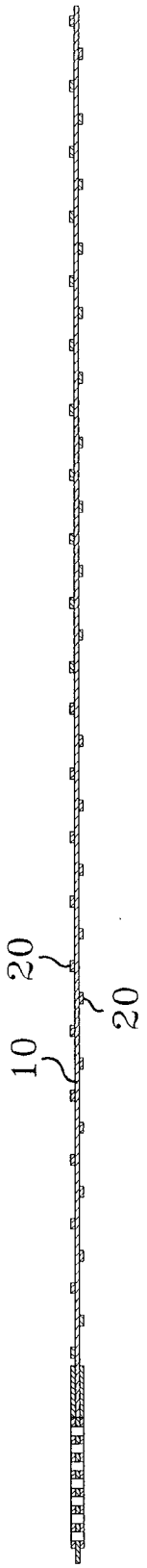

FIG. 4

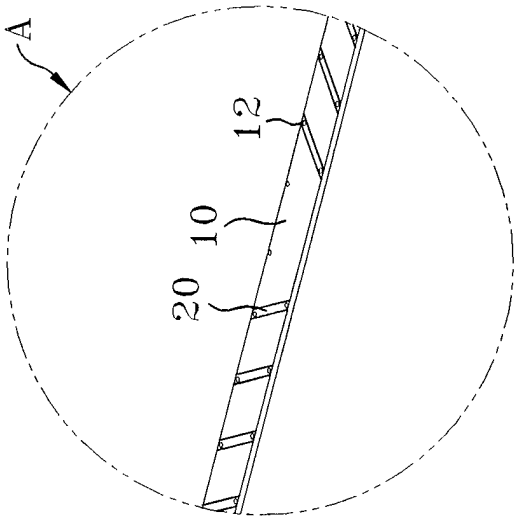

FIG. 3

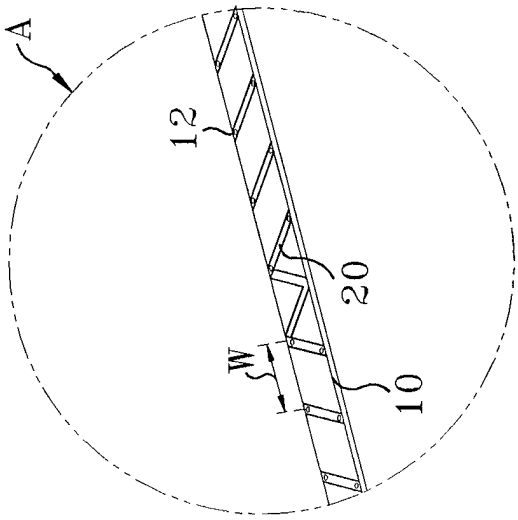

FIG. 5

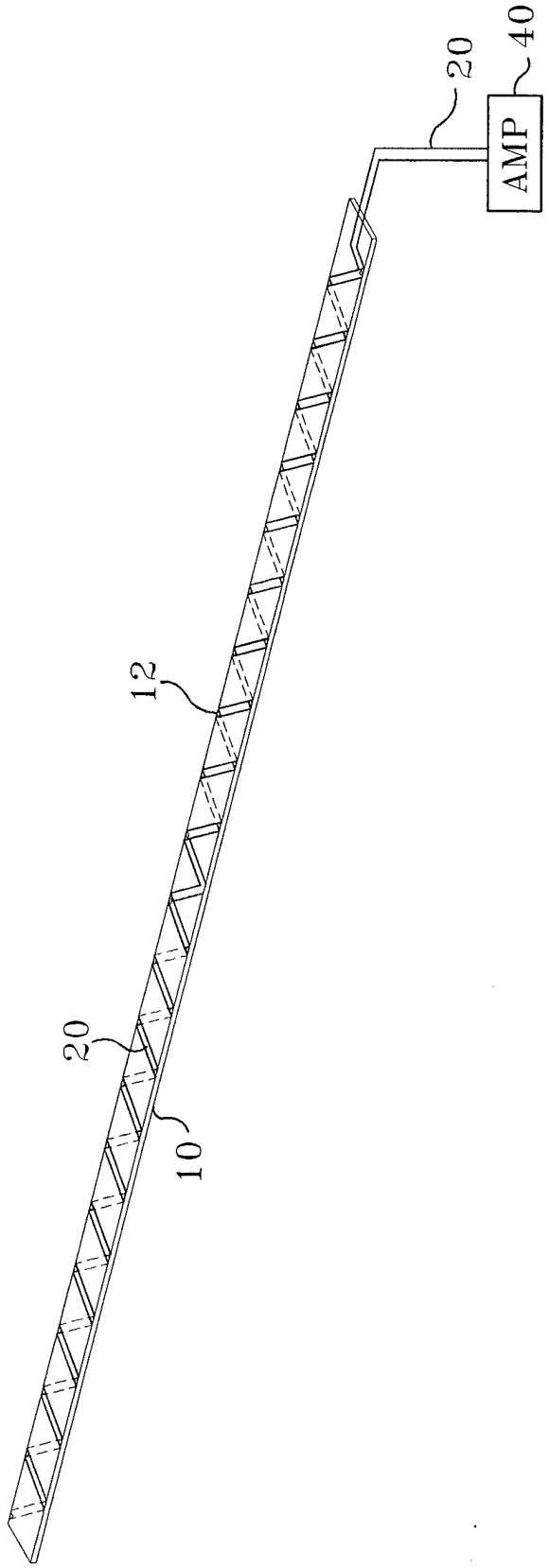

FIG. 6

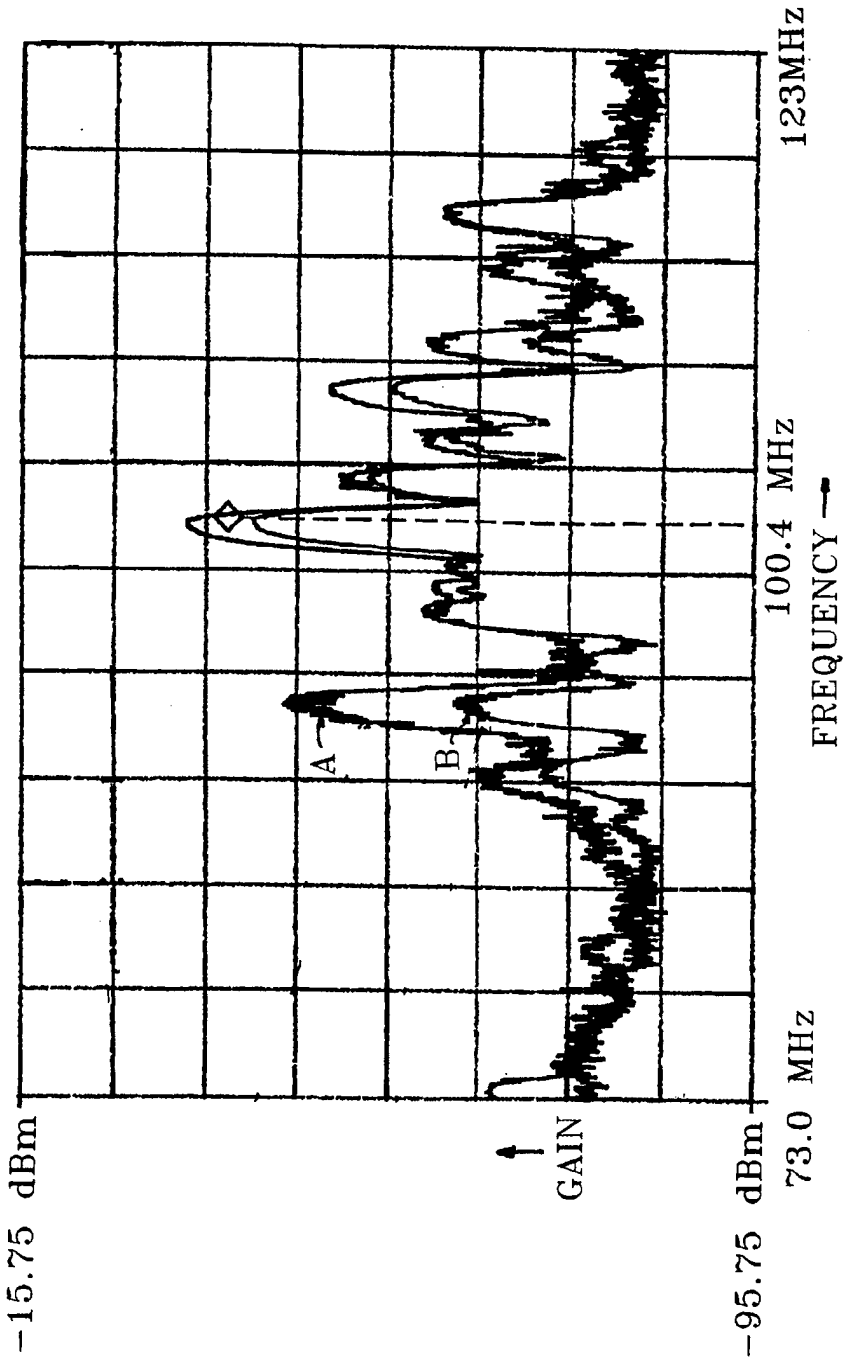

INTERNATIONAL SEARCH REPORT

International application No.
PCT/KR 96/00266

A. CLASSIFICATION OF SUBJECT MATTER

IPC^6: H 01 Q 1/32, 1/36, 9/30

According to International Patent Classification (IPC) or to both national classification and IPC

B. FIELDS SEARCHED

Minimum documentation searched (classification system followed by classification symbols)

IPC^6: H 01 Q

Documentation searched other than minimum documentation to the extent that such documents are included in the fields searched

Electronic data base consulted during the international search (name of data base and, where practicable, search terms used)

WPI, EPODOC

C. DOCUMENTS CONSIDERED TO BE RELEVANT

Category*	Citation of document, with indication, where appropriate, of the relevant passages	Relevant to claim No.
A	EP 0 443 491 B1 (NTT) 01 May 1996 (01.05.96), fig.1,8; claims.	1,2,5-7
A	Patent Abstracts of Japan, Vol.16, No.38 (E-1161), 1992, JP 3-247 021 A (NTT).	1,2,5-7
A	US 5 083 136 A (WELLS) 21 January 1992 (21.01.92), fig.2-4.	1,2,5
A	WO 93/00 721 A1 (SIEMENS) 07 January 1993 (07.01.93), fig.; abstract.	1,2
A	US 4 203 118 A (ALFORD) 13 May 1980 (13.05.80), fig.1; claim 1.	1
A	Patent Abstracts of Japan, Vol.14, No.178 (E-915), 1990, JP 2-31 578 A (SEIKO EPSON).	1,2,5-7

☐ Further documents are listed in the continuation of Box C. ☒ See patent family annex.

* Special categories of cited documents:

"A" document defining the general state of the art which is not considered to be of particular relevance

"E" earlier document but published on or after the international filing date

"L" document which may throw doubts on priority claim(s) or which is cited to establish the publication date of another citation or other special reason (as specified)

"O" document referring to an oral disclosure, use, exhibition or other means

"P" document published prior to the international filing date but later than the priority date claimed

"T" later document published after the international filing date or priority date and not in conflict with the application but cited to understand the principle or theory underlying the invention

"X" document of particular relevance; the claimed invention cannot be considered novel or cannot be considered to involve an inventive step when the document is taken alone

"Y" document of particular relevance; the claimed invention cannot be considered to involve an inventive step when the document is combined with one or more other such documents, such combination being obvious to a person skilled in the art

"&" document member of the same patent family

Date of the actual completion of the international search	Date of mailing of the international search report
13 August 1997 (13.08.97)	19 August 1997 (19.08.97)
Name and mailing address of the ISA/ AT AUSTRIAN PATENT OFFICE Kohlmarkt 8-10 A-1014 Vienna Facsimile No. 1/53424/535	Authorized officer Heinich Telephone No. 1/53424/454

INTERNATIONAL SEARCH REPORT

Information on patent family members

International application No.
PCT/KR 96/00266

Im Recherchenbericht angeführtes Patentdokument Patent document cited in search report Document de brevet cité dans le rapport de recherche	Datum der Veröffentlichung Publication date Date de publication	Mitglied(er) der Patentfamilie Patent family member(s) Membre(s) de la famille de brevets	Datum der Veröffentlichung Publication date Date de publication
EP B1 443491	01-05-96	DE C0 69119109 DE T2 69119109 EP A1 443491 US A 5136303 JP A2 4211522	05-06-96 24-10-96 28-08-91 04-08-92 03-08-92
US A 5083136	21-01-92	keine - none - rien	
WO A1 9300721	07-01-93	EP A1 591323 JP T2 6508732	13-04-94 29-09-94
US A 4203118	13-05-80	keine - none - rien	