July 14, 1942. C. E. BURT 2,290,141

PERFORATION CLEANING METHOD AND APPARATUS

Filed Jan. 14, 1939 2 Sheets-Sheet 1

Fig. 1.

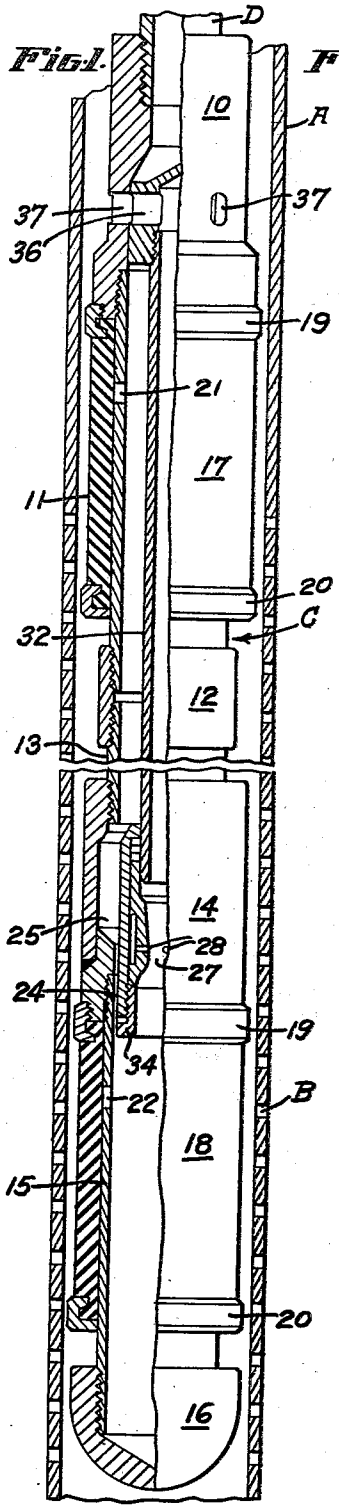

Fig. 2.

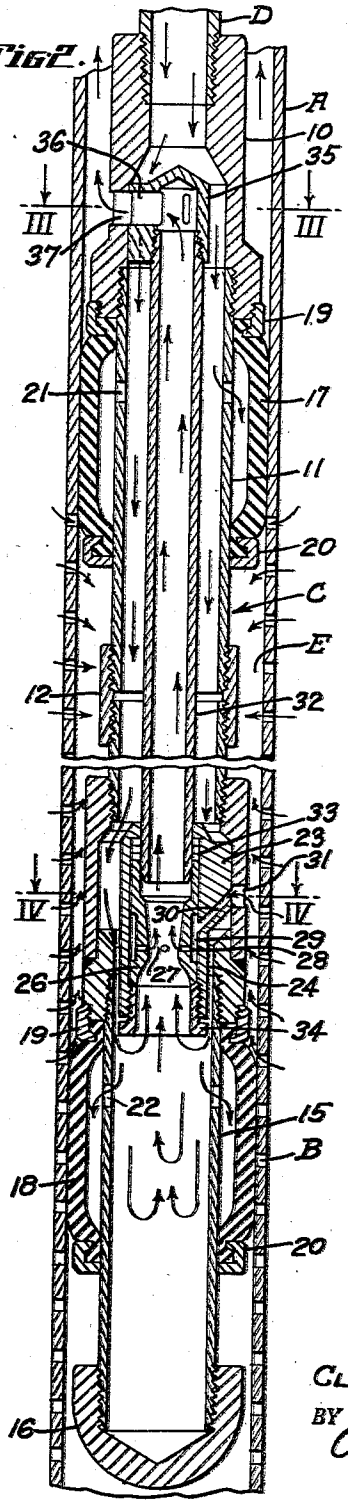

Fig. 3.

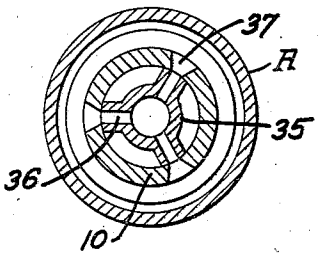

Fig. 4.

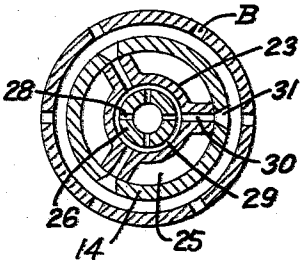

INVENTOR.
CLARENCE E. BURT
BY
Oscar A. Mellin
ATTORNEY.

July 14, 1942. C. E. BURT 2,290,141

PERFORATION CLEANING METHOD AND APPARATUS

Filed Jan. 14, 1939 2 Sheets-Sheet 2

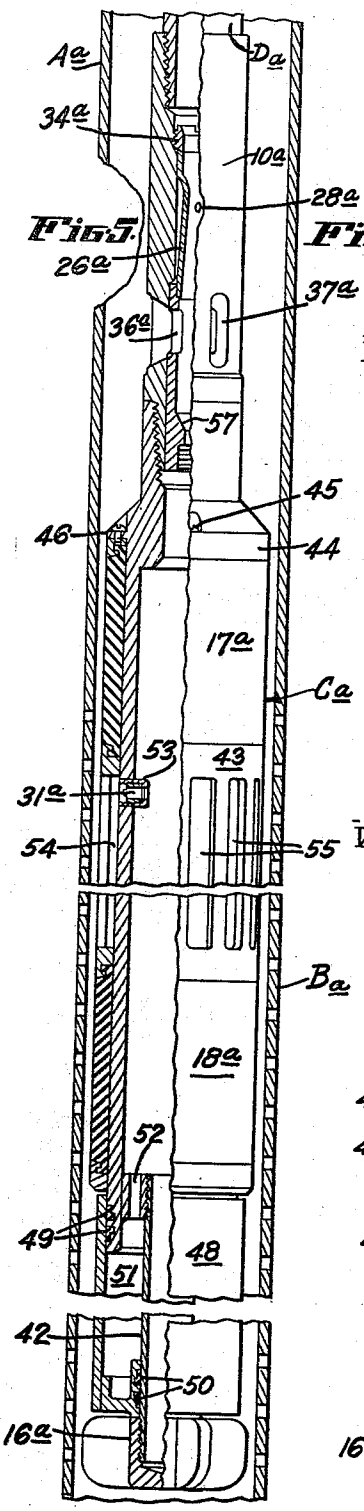

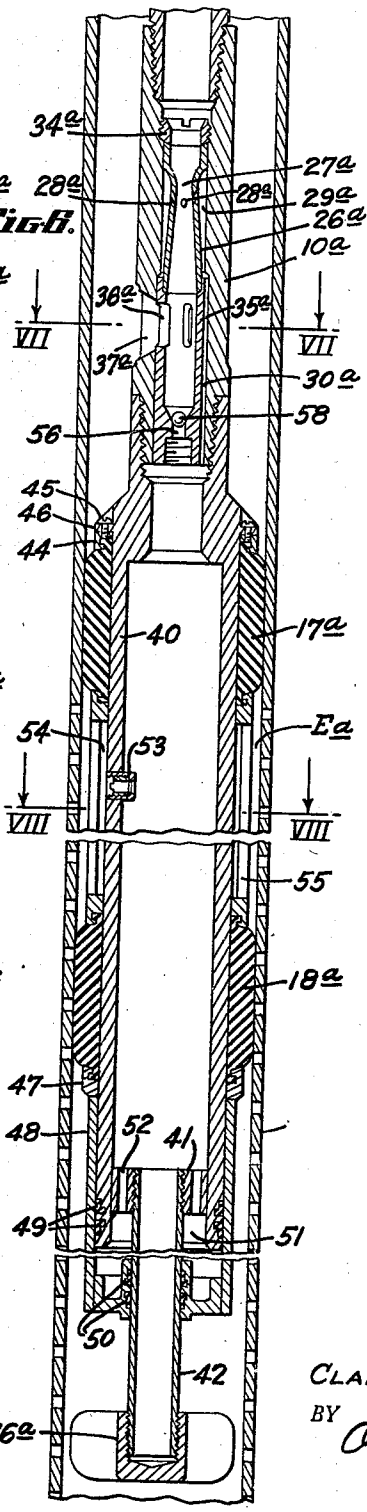

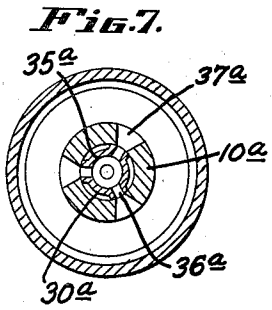

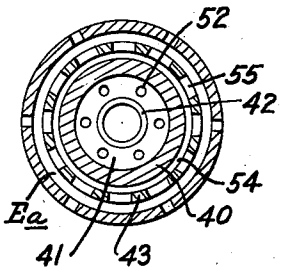

INVENTOR.
CLARENCE E. BURT
BY
Oscar A. Mellin
ATTORNEY.

Patented July 14, 1942 2,290,141

UNITED STATES PATENT OFFICE

2,290,141

PERFORATION CLEANING METHOD AND APPARATUS

Clarence E. Burt, Los Angeles, Calif., assignor to Baker Oil Tools, Inc., Huntington Park, Calif., a corporation of California

Application January 14, 1939, Serial No. 250,966

25 Claims. (Cl. 166—20)

This invention relates generally to what is commonly referred to as perforation cleaners and is more particularly directed to an improved method and apparatus for removing sand, mud, paraffine, or other flow restricting material from the perforations of the screen portion of a well casing, liner, or the like.

The major proportion of the perforation cleaners now in general use in the oil industry are of the hydrostatic type in which a normally empty loading chamber is initially sealed against ingress of well fluid by a valve or a fragile sealing means capable of being opened or ruptured, as the case may be, to permit the hydrostatic pressure of the column of fluid in the well to effect a sudden and violent inrush of well fluid through the perforations to clear them of flow restricting materials and carry such materials into the loading chamber past a back-pressure valve, after which the cleaner with its entrapped load is removed from the well and the contents of the loading chamber is dumped or otherwise removed, it being then necessary to recondition the cleaner before it can again be used. Since perforation cleaners of this general character are of sufficient capacity to clean only a few feet of well screen at a time, and since such well screens may be and often are a hundred or more feet in length, it becomes apparent that a relatively large number of round trips of the cleaner, with the necessary dumping and reconditioning thereof, is required to complete the cleaning of an entire screen and that the complete job is a relatively expensive and time consuming undertaking; it will also be evident that as the hydrostatic pressure of the fluid column in the well supplies the motivating force producing the flushing action above referred to, this flushing action of the cleaner will be directly proportional to its position of use below the fluid level of said fluid column and will vary at different elevations in the same well as well as in different wells having fluid columns of different heights, and may even degenerate into a mere flowing action having no flushing value in wells having an exceeding low fluid level or in instances in which the fluid level has receded to a point relatively close to a screen section to be cleaned. Obviously the flushing action of a hydraulic cleaner of this type is not of uniform character and cannot be varied at will by the operator during a cleaning operation, nor will such a cleaner provide the operator with any indication of the success or failure of the cleaning operation until the cleaner is removed from the well and the contents of its loading chamber is examined.

It therefore becomes the principal object of the present invention to provide an improved method and apparatus which involve a continuous circulation wet-tube principle carried into effect through the use of a circulating tubing string provided with packing means for isolating a flushing zone in the well casing adjacent the perforations thereof, and which utilizes the velocity of a motivating fluid circulated in the tubing string and in the casing above said zone to create a suction influence tending to induce a continuous inward flushing flow of well fluid through the perforations and said zone to clear said perforations of flow restricting materials and combine with the circulation stream for conveyance thereby to the surface; my improved method and apparatus being fully capable of conducting a series of successive perforation flushing operations without removing the cleaner from the well and without any dumping or reconditioning thereof between the individual flushing operations, thus enabling a complete perforation cleaning job involving all of the perforations of a well casing to be completed during a single round trip of the cleaner, the circulation providing a medium through which the operator may at all times control the created suction influence to maintain a uniform flushing action at different elevations or to vary the flushing action at will to compensate for any variable conditions encountered, the return circulation providing a constant visual indicating means keeping the operator fully informed as to the progress and effectiveness of the flushing operation.

Two forms of embodiment of the present invention are exemplified in the following description and illustrated by way of example in the accompanying drawings, in which:

Fig. 1 is a longitudinal section through a screen portion of a well casing showing the perforation cleaner of the present invention partly in section and positioned therein, the parts being illustrated in their normal positions.

Fig. 2 is a similar view showing the parts in operated positions.

Fig. 3 is a transverse section taken on the line III—III of Fig. 2.

Fig. 4 is a transverse section taken approximately on the line IV—IV of Fig. 2.

Fig. 5 is a vertical section of the same general character as Fig. 1, illustrating a second embodiment of the present invention.

Fig. 6 is a similar view showing the apparatus of Fig. 5 in an operated condition.

Fig. 7 is a transverse section taken on the line VII—VII of Fig. 6.

Fig. 8 is a transverse section taken on the line VIII—VIII of Fig. 6.

Referring particularly to Figs. 1 to 4, A designates a casing or liner which is assumed to be properly positioned in a well containing a column of well fluid and which is perforated to provide a screen portion B, and C designates the perforation cleaner that has been lowered into said screen to a position of use, by means of a tubing string D which, before the perforation cleaning operation, will be connected to the usual circulation pump at the surface.

The perforation cleaner C provides a tubular body structure comprising a circulation discharge unit 10 screw-threaded at its upper end for connection to the tubing string D and at its lower end for connection to an upper packer body 11 which is joined by a screw-threaded coupling 12 and an adjacent pipe length 13 which is connected, preferably by screw-threads, to the upper end of a pump housing 14, said pump housing having a screw-thread connection with a lower packer body 15 that is closed at its lower end by a rounded guide cap 16 screw-threaded thereon.

An upper packing sleeve 17, formed of rubber or other suitable resilient material, surrounds the upper tubular packer body 11 and a similar lower packing sleeve 18 surrounds the lower tubular packer body 15, each of said packing sleeves being similarly reenforced at opposite ends by ring members 19 and 20, respectively, and each of said ring members being provided with an internal lip engaging within a companion external groove formed in the respective packing sleeve. The lower ring member 20 of each packing sleeve is slidably mounted on its associated packer body and the upper ring member 19 of the upper packing sleeve 17 is connected to the discharge unit 10 by being screw-threaded thereon, while the upper ring member 19 of the lower packing sleeve 18 is connected in a like manner to the pump housing 14, each packing sleeve thus having an upper end which is secured to the body of the cleaner and a lower end which is longitudinally slidable thereon. In back of the upper packing sleeve 17, the body member 11 is provided with lateral ports 21 and in back of the lower packing sleeve 18, the body member 15 is provided with similar lateral ports 22. With this arrangement the several body members provide a down-flow passage which communicates with the space behind the upper and lower packing sleeves through the respective ports 21 and 22, for a purpose which will later be explained.

Fixed by welding or other suitable means within the bore of the tubular pump housing 14 is a sleeve member 23 having a concentric lower end of reduced diameter spaced from the wall of said pump housing as at 24, this annular space 24 communicating with the interior of the lower packer body 15 and with the interior of the tubular body member 13 above the pump housing, through vertical passageways 25 formed by channels in the exterior surface of the sleeve 23 and by the interior surface of the pump housing, as shown in Fig. 3, the space 24 and passageways 25 forming a portion of the down-flow passage of the cleaner.

Arranged concentrically within the bore of the sleeve member 23 is a Venturi pump nozzle 26 having a restricted throat 27 and provided with suction orifices 28 disposed immediately above said throat and communicating with an annular space 29 formed by an exterior groove in said nozzle and by the interior surface of said sleeve member, said sleeve member having upwardly angled suction passages 30 communicating with the annular space 29 and with companion suction ports 31 formed in the wall of the pump housing 14, as shown in Figs. 2 and 4.

The discharge end of the bore of the Venturi pump nozzle 26 is counterbored to receive the lower end of a pump discharge conduit or tube 32 which extends through the reduced upper portion of the bore of the sleeve member 23 and into said counterbore. Said lower end of the discharge tube 32 is surrounded by suitable packing rings 33 and the Venturi nozzle 26 is removably mounted in sleeve member 23 and held rigidly in place therein by a screw-threaded bushing 34 which engages said nozzle and forces it upwardly to tightly clamp against the packing rings 33 which prevent fluid leakage at this point.

The upper end of the discharge tube 32 is connected to a supporting spider 35, the legs of which are welded or otherwise joined to the discharge unit 10 and are provided with discharge passages 36 communicating with the interior of the discharge tube and with companion discharge ports 37 formed in the side wall of said discharge unit 10, as shown in Figs. 2 and 3.

In conducting a perforation cleaning operation with the above described apparatus, the perforation cleaner C is attached to the lower end of the tubing string D and lowered into the well casing A as said string is made up in the usual manner. During the lowering of the cleaner, well fluid present in the casing will enter and completely fill all of the open spaces within the device, and the bore of the tubing string up to the level of the fluid column.

With the cleaner lowered to a desired position of use within the screen to be cleaned, the circulation pump at the surface will be connected to the tubing string and circulation of the motivating fluid will be established, such motivating fluid preferably being oil if the well is a producing oil well.

The path of the circulation will be down the tubing string past the supporting spider 35, through the upper packer body 11, coupling 12 and pipe 13, through the passages 25 and 24 of the pump housing 14 and into the lower packer body 18 where it reverses and flows upwardly through the Venturi nozzle 26, the tube 32 and the discharge passages 36 of the supporting spider to discharge through the discharge ports 37 into the casing above the upper packer 17.

As an immediate effect of the circulation there will be a rise in pressure in the down-flow passage of the cleaner which will be effective through the lateral ports 21 and 22 to expand the upper and lower packing sleeves 17 and 18 to packing engagement with the casing wall, the two packers thus packing off the interior of the screen B from the rest of the interior of the casing and isolating an intermediate flushing zone E adjacent the perforations to be cleaned, as shown in Fig. 2.

With the packers 17 and 18 thus set in the well casing, the throat or reduced pressure zone of the Venturi pump 26 becomes connected, through the suction orifices 28, suction passages 30, and suction ports 31, only with the flushing zone E between the two packers, and the motivating fluid in its flow through the restricted

throat 27 of the Venturi nozzle will create a suction influence producing a pressure differential which will induce a continuous inward flushing flow of well fluid through the perforations and the zone E to clear said perforations of such materials as may be restricting the flow areas of the several perforations, the flushing well fluid carrying the removed flow restricting materials passing through the flushing zone E and the suction ports, passages and orifices of the Venturi pump to combine with the circulation stream for conveyance thereby to the surface.

It will be understood that since the produced suction influence is directly proportional to the velocity of the motivating fluid through the Venturi pump, the flushing action of the well fluid through the screen perforations will at all times be under control of the operator and may by him be varied as is desired or is necessary to compensate for any variable or different conditions encountered.

The circulation will be continued as long as desired, preferably until the operator is assured that the screen section being cleaned is clear and flowing to the full capacity of its several perforations.

My improved method and apparatus provides such assurance while the cleaner is in its position of use, and enables the operator to vary the produced flushing action of the apparatus until such assurance is had.

A visual indication of the effectiveness of the perforation flushing action is provided by the return circulation and in a great number of instances a substantially clear return circulation practically devoid of freighted mud, paraffin, shale particles and other foreign perforation clogging materials and carrying no greater sand content than under ordinary producing conditions will at once indicate to the operator a reasonably clear condition of the screen section being flushed.

However, there may be conditions under which a clear return circulation may indicate a completed flushing operation while the volume of the return circulation may denote only that the flushing action was successful in flushing from the perforations merely those clogging materials which could be dislodged by the degree of flushing force employed, leaving other clogging materials which require a greater flushing force to dislodge.

Obviously, since the volume of fluid pumped down the tubing string is known and since all of the flushing fluid which combines with the circulation stream must come from the flushing zone and through the several perforations adjacent said zone, the total volume of fluid passing through said perforations may be measured as an apparent increase in the return circulation.

The operator will, of course, know the height of the column of well fluid above the screen section being flushed, as well as the flow and suction capacity of the Venturi pump for any rate of circulation, and the volume of well fluid that should be drawn in through the perforations of said screen section under normal conditions, and from these known factors he can calculate the volume of return circulation increase which will denote a properly cleaned screen section for the circulation rate employed to produce the suction influence and flushing force involved.

In case the measured increase of the return circulation in relation to the volume of the ingoing circulation falls appreciably below the calculated increase, the operator will at once be informed that, regardless of the clear character of such return circulation, it is reasonably probable that the flow capacity of the screen section is still restricted by clogging material which could not be dislodged by the forces previously employed, and he can then increase the circulation pressure until there is produced a degree of suction influence sufficient to create the flushing force necessary to dislodge the remainder of such clogging materials.

When the flushing or cleaning operation is completed at one elevation to clean the perforations of one section of a screen, the circulation will be stopped to release the two packers, and the cleaner, will, by manipulation of the tubing string, be translated in the casing to a new position in an adjacent section of the screen, and the above described operation repeated to clean the perforations of said adjacent screen section. Thus, without removing the apparatus from the well, a well screen of any length may be cleaned during a single round trip of the cleaner.

It will therefore be evident that the method and apparatus of the present invention will effect a great saving in the cost of well screen cleaning operations, and that the constant and variable control of the flushing operation exercised by the operator through his control of the motivating circulation fluid, coupled with the visual indication afforded by the return circulation, will enable the operator to maintain the apparatus at its maximum efficiency under any conditions encountered in the same well or in any other well, in which the apparatus may be used, this being of particular importance in view of the facts that various wells may contain fluid columns of different height and of different gravity fluids and may have screens of widely different character, particularly as to area and shape of perforations.

Further, in view of the fact that the character of the productive formations may widely vary in different wells and even at different depths in a single well, the controlled motivating circulation enables the operator to so govern the flushing action as to eliminate or greatly reduce danger of breaking down the established oil channels of the productive formations.

In Figs. 5 to 8 of the drawings there is disclosed a second embodiment of the apparatus of the present invention, elements similar to those of the apparatus shown in Figs. 1 to 4 being designated in Figs. 5 to 8 by similar reference characters, with an added suffix.

In this embodiment the body structure comprises a circulation discharge unit 10*a* which screws into the upper end of a tubular packer body 40 having secured within its lower end, by welding or other suitable means, a partition 41 which is provided with an axial depending pipe 42 closed at its lower end by a winged guide cap 16*a*. Surrounding the tubular packer body 40 is an upper packing sleeve 17*a*, a lower packing sleeve 18*a* and an intermediate spacing cage member 43 which at opposite ends is provided with internal lips engaging in companion external grooves formed in the adjacent ends of the respective packing sleeves, said cage thus connecting the lower end of the upper packing sleeve with the upper end of the lower packing sleeve. A reinforcing and anchoring ring 44 has a similar lip and groove engagement with the upper end of the upper packing sleeve 17*a* and

is rigidly connected, by screws 45 or otherwise, to an external flange 46 formed on the body member 40, while the lower end of the lower packing sleeve 18a is reinforced by a ring member 47 slidable on the body member 40 and having a lip and groove engagement with said sleeve.

A packing expanding cylinder 48 slidably engages the lower end portion of the body member 40 and the depending pipe 42 and is provided with suitable packing rings 49 and 50 to prevent fluid leakage between said parts. Said cylinder 48 provides an annular suction chamber 51 which communicates through ports 52, formed in the partition 41, with the interior of the body member 40. The body member 40 provides a suction passage and secured in its side wall is a flow bean 53 which provides a lateral suction port 31a communicating with the annular space 54 behind the cage member 43, said cage member having a plurality of elongated openings 55 formed in its wall, as shown in Fig. 5.

Fixed by welding or other suitable means within the lower portion of the bore of the discharge unit or pump housing 10a is a sleeve 35a having lateral discharge ports 36a registering with companion discharge ports 37a formed in the wall of the housing unit 10a. At its lower end the sleeve 35a has a restricted passageway 56 having a valve seat 57 at the point where it tapers upwardly to join the main bore of the sleeve. A ball valve 58 is adapted to be sent down the tubing string at the proper time to engage the seat 57 and block the downway flow of circulation fluid at this point and insure a full flow of the circulation stream through the discharge ports 36a, 37a and into the well casing above the upper packing 17a.

Arranged concentrically within the bore of the unit 10a above the sleeve 35a is a Venturi pump nozzle 26a, the lower end of which is spaced from the wall of said unit and fits into a counterbore formed in the upper end of the sleeve 35a with the discharge end of its bore coinciding in diameter with the bore of said sleeve. A bushing 34a having an internal diameter coinciding with that of the intake end of the nozzle bore, screws into the bore of the sleeve 35a and secures the nozzle in place.

This Venturi nozzle 26a provides a restricted throat 27a and is provided with suction orifices 28a disposed immediately below said throat and communicating with the annular space 29a between the nozzle and the wall of the pump housing, which in turn communicates with vertical passages 30a formed by channels in the exterior surface of the sleeve 35a and by the inner wall surface of the housing 10a, as shown in Fig. 7, said passages 30a extending downwardly to communicate with the interior of the body member 40.

In the operation of this apparatus an initial circulation, partly through the discharge ports 37a and partly through the passage 56 and the interior of the body member 40 and through the port 31a and cage openings 55, may be had to clear the interior of the casing if necessary.

To conduct the perforation cleaning operation, the ball 58 is inserted in the tubing string and is pumped down through the throat of the Venturi nozzle to engage the seat 57 and stop the downward circulation at that point, thus compelling the entire circulation stream to discharge above the upper packer.

The suction influence created by the fluid circulation through the Venturi pump will be effective to reduce the pressure in the body member 40 and in the lower chamber 51 to cause an upward travel of the packing expanding cylinder 48 which will engage the ring member 47 and translate the lower packing sleeve 18a, the cage member 43 and the lower end portion of the upper packing sleeve 17a upwardly to compress the packing sleeves longitudinally so that they will expand radially to packing engagement with the casing wall and isolate the flushing zone Ea.

The perforation cleaning operation will then be conducted in the same manner as previously described in connection with the apparatus of Figs. 1 to 4. In the event the packing sleeves 17a and 18a do not readily disengage from the casing wall upon stopping the circulation preparatory to a shifting of the cleaner to a new position in the casing or to a removal of the cleaner from the well, the operator will take an upward strain on the tubing string to loosen the packing sleeves from the casing so that the inherent resiliency of said sleeves will tend to restore the packers to their normal condition.

While I have shown the apparatus of the present invention in two preferred forms, it is to be understood that various changes of structure may be made by those skilled in the art without departing from the spirit of the invention as defined in the appended claims.

Having thus described my invention, what I claim and desire to secure by Letters Patent is:

1. In a method of cleaning a screen or perforated portion of a well casing or the like, the steps comprising packing off the interior of the casing to define a flushing zone adjacent the perforations to be cleaned, circulating a motivating fluid to discharge in the casing above said zone to produce a suction influence, and utilizing such suction influence to reduce the pressure in said zone and induce an inward flushing flow of well fluid through the perforations and said zone to clear said perforations of flow restricting materials.

2. In a method of cleaning a screen or perforated portion of a well casing or the like, the steps comprising packing off the interior of the casing to define a flushing zone adjacent the perforations to be cleaned, circulating a motivating fluid to discharge in the casing above said zone to produce a suction influence, utilizing such suction influence to reduce the pressure in said zone and induce an inward flushing flow of well fluid through the perforations and said zone to clear said perforations of flow restricting materials, and controlling the circulation to regulate the produced suction influence and govern flushing action.

3. In a method of cleaning a screen or perforated portion of a well casing or the like, the steps comprising packing off the interior of the casing at relatively spaced points to define an intermediate flushing zone adjacent the perforations to be cleaned, circulating a motivating fluid to discharge in the casing above the upper packing point to produce a suction influence, and utilizing such suction influence to reduce the pressure in said zone and induce an inward flushing flow of well fluid through the perforations and said zone to clear said perforations of flow restricting materials.

4. In a method of cleaning a screen or perforated portion of a well casing or the like, the

steps comprising packing off the interior of the casing at relatively spaced points to define an intermediate flushing zone adjacent the perforations to be cleaned, circulating a motivating fluid to discharge in the casing above the upper packing point to produce a suction influence, utilizing such suction influence to reduce the pressure in said zone and induce an inward flushing flow of well fluid through the perforations and said zone to clear said perforations of flow restricting materials, and controlling the circulation to regulate the produced suction influence and govern flushing action.

5. In a method of cleaning a screen or perforated portion of a well casing or the like, the steps comprising lowering into said casing a string of pipe carrying packing means and provided with a suction pump discharging above said packing means, circulating a motivating fluid through said pump to create a suction influence, and utilizing such suction influence to cause said packing means to pack off the interior of said casing and define a flushing zone adjacent the perforations to be cleaned and to reduce the pressure in said zone and induce an inward flushing flow of well fluid through the perforations and said zone to clear said perforations of flow restricting materials.

6. In a method of cleaning a screen or perforated portion of a well casing or the like, the steps comprising lowering into said casing a string of pipe carrying relatively spaced packers and provided with a suction pump discharging above the upper packer, circulating a motivating fluid through said pump to create a suction influence, and utilizing such suction influence to cause said packers to expand and pack off the interior of the casing to define an intermediate flushing zone adjacent the perforations to be cleaned and to reduce the pressure in said zone and induce an inward flushing flow of well fluid through the perforations and said zone to clear said perforations of flow restricting materials.

7. A fluid-circulating method of cleaning perforations formed in a well casing which comprises lowering into the casing a circulation string of pipe, packing off the interior of said casing to define a flushing zone adjacent the perforations to be cleaned, circulating a motivating fluid down said circulation string to discharge into the well casing above said pack off and create a suction influence tending to reduce the pressure in said zone and induce an inward flushing flow of well fluid through the perforations and said zone to clear said perforations of flow restricting materials and combine with the circulation stream for conveyance thereby to the surface.

8. A fluid-circulating method of cleaning perforations performed in a well casing which comprises lowering into the casing a circulation string of pipe, packing off the interior of said casing to define a flushing zone adjacent the perforations to be cleaned, circulating a motivating fluid down said circulation string to discharge into the well casing above said pack off and create a suction influence tending to reduce the pressure in said zone and induce an inward flushing flow of well fluid through the perforations and said zone to clear said perforations of flow restricting materials and combine with the circulation stream for conveyance thereby to the surface, and regulating the circulation to regulate the produced suction influence and govern flushing action.

9. A fluid-circulating method of cleaning an entire well screen involving only a single round trip into the well of a circulation tubing string, said method including packing off the interior of the screen to define a flushing zone adjacent the perforations of a section of said screen, circulating a motivating fluid down said tubing string to discharge above said pack off and create a suction influence, utilizing said suction influence to reduce the pressure in said zone and induce an inward flushing flow of well fluid through the perforations of said screen section and through said zone to clear said perforations of flow restricting materials and combine with the circulation stream for conveyance thereby to the surface, stopping such circulation, translating the tubing string to a proper elevation to pack off the adjacent section of the screen, reestablishing the circulation to repeat the above defined perforation flushing operation, and repeating the above defined cycle until the entire screen is cleaned.

10. A fluid-circulating method of cleaning an entire well screen involving only a single round trip into the well of a circulation tubing string, said method including packing off the interior of the screen to define a flushing zone adjacent the perforations of a section of said screen, circulating a motivating fluid down said tubing string to discharge above said pack off and create a suction influence, utilizing said suction influence to reduce the pressure in said zone and induce an inward flushing flow of well fluid through the perforations of said screen section and through said zone to clear said perforations of flow restricting materials and combine with the circulation stream for conveyance thereby to the surface, stopping such circulation, translating the tubing string to a proper elevation to pack off the adjacent section of the screen, reestablishing the circulation to repeat the above defined perforation flushing operation, repeating the above defined cycle until the entire screen is cleaned, and regulating the circulation to regulate the produced suction influence and independently govern the flushing action at each screen section.

11. A perforation cleaning apparatus having packing means adapted to pack off a well casing to isolate a flushing zone adjacent the perforations to be cleaned, and means for circulating a motivating fluid in the casing above said zone to create a suction influence tending to effect a pressure reduction in said zone and induce an inward flushing of well fluid through the perforations and said zone to clear said perforations of flow restricting materials.

12. A perforation cleaning apparatus having packing means adapted to pack off a well casing to isolate a flushing zone adjacent the perforations to be cleaned, and means for circulating a motivating fluid in the casing above said zone and including a suction pump having a suction orifice communicating with said flushing zone, such pump functioning to induce an inward flushing flow of well fluid through the perforations and said zone to clear said perforations of flow restricting materials.

13. In an apparatus of the character disclosed, the combination of a body adapted for attachment to the lower end of a tubing string down which a motivating fluid may be pumped, relatively spaced packers carried by said body and adapted to be expanded by fluid pressure, said body providing a flow passage to receive the motivating fluid and having a discharge port dis-

posed above the upper of said packers and a suction port disposed between said packers, and a suction pump disposed in said flow passage to receive said motivating fluid and discharge through said discharge port and having a suction orifice communicating with said suction port.

14. In an apparatus of the character disclosed, the combination of a body adapted for attachment to the lower end of a tubing string down which a motivating fluid may be pumped, relatively spaced packers carried by said body and adapted to be expanded by fluid pressure, said body providing a flow passage to receive the motivating fluid and having a discharge port disposed above the upper of said packers and a suction port disposed between said packers, and a suction pump comprising a flow nozzle disposed in said flow passage to receive said motivating fluid and discharge through said discharge port and having a suction orifice communicating with said suction port.

15. In an apparatus of the character disclosed, the combination of a body adapted for attachment to the lower end of a tubing string down which a motivating fluid may be pumped, relatively spaced packers carried by said body and adapted to be expanded by fluid pressure, said body providing a flow passage to receive the motivating fluid and having a discharge port disposed above the upper of said packers and a suction port disposed between said packers, and a suction pump comprising a Venturi nozzle disposed in said flow passage to receive said motivating fluid and discharge through said discharge port and having a suction orifice communicating with said suction port.

16. In an apparatus of the character disclosed, the combination of a body adapted for attachment to the lower end of a tubing string down which a motivating fluid may be pumped, said body having a flow passage disposed to receive said motivating fluid and an annular valve seat at the lower end of said passage, said body also having a lateral discharge port communicating with said passage, vertically spaced packers carried by said body below said discharge port, a suction pump having a suction orifice and comprising a flow nozzle disposed axially in said flow passage, said body having a suction port between said packers, means establishing fluid communication between said suction port and said suction orifice, and a valving element adapted to be sent down the tubing string to engage said seat and close said flow passage to cause the entire flow of motivating fluid to discharge through said lateral discharge port.

17. In an apparatus of the character disclosed, the combination of a body adapted for attachment to the lower end of a tubing string down which a motivating fluid can be pumped, said body having a flow passage disposed to receive said motivating fluid and an annular valve seat at the lower end of said passage, said body also having a lateral discharge port communicating with said passage, vertically spaced packers carried by said body below said discharge port, a suction pump having a suction orifice and comprising a Venturi nozzle disposed axially in said flow passage, said body having a suction port between said packers, means establishing fluid communication between said suction port and said suction orifice, and a valving element adapted to be sent down the tubing string to engage said seat and close said flow passage to cause the entire flow of motivating fluid to discharge through said lateral discharge port.

18. In an apparatus of the character disclosed, the combination of a body adapted for attachment to the lower end of a tubing string down which a motivating fluid can be pumped, said body having a flow passage disposed to receive said motivating fluid and an annular valve seat at the lower end of said passage, said body also having a lateral discharge port communicating with said passage, vertically spaced packers carried by said body below said discharge port, a suction pump having a suction orifice and comprising a flow nozzle disposed axially in said flow passage, said body having a suction port between said packers, means establishing fluid communication between said suction port and said suction orifice, a valving element adapted to be sent down the tubing string to engage said seat and close said flow passage to cause the entire flow of motivating fluid to discharge through said lateral discharge port, and pressure actuated means rendered effective by the suction influence of said suction pump to expand said packers.

19. A method of cleaning a screen or perforated portion of a well casing or the like which comprises placing restrictions in said casing to form a flushing zone adjacent the perforations to be cleaned, gradually creating and thereafter maintaining a desired suction influence for a desired time interval, and applying such suction influence to said zone from the beginning of its creation to the end of said time interval.

20. A fluid-circulating method of cleaning a screen or perforated portion of a well casing or the like which comprises placing restrictions in said casing to form a flushing zone adjacent the perforations to be cleaned, circulating a motivating fluid in said casing to gradually create and thereafter maintain a desired suction influence with the continuation of such circulation, and applying such suction influence to said zone from the beginning to the end of such circulation.

21. A fluid-circulating method of cleaning a screen or perforated portion of a well casing or the like which comprises placing restrictions in said casing to form a flushing zone adjacent to the perforations to be cleaned, circulating a motivating fluid in said casing to gradually create and thereafter maintain a desired suction influence with the continuation of such circulation, applying such suction influence to said zone from the beginning to the end of such circulation, and controlling the circulation to regulate said suction influence.

22. A perforation cleaning apparatus having packing means adapted to pack off a well casing to isolate a flushing zone adjacent the perforations to be cleaned, and means for circulating a motivating fluid in the casing above said zone comprising a venturi having a throat communicating with said flushing zone, said venturi functioning to induce an inward flushing flow of well fluid through the perforations and said zone to clear said perforations of flow restricting materials.

23. A perforation cleaning apparatus adapted to be lowered in a well casing on a tubular string and having packing means cooperable with said casing to isolate a flushing zone adjacent casing perforations to be cleaned, and means for creating a suction influence in said zone to induce an inward flushing flow of well fluid through said perforations comprising a suction pump for re-

ceiving a motivating fluid passing downwardly through said tubular string for discharge into the casing above said flushing zone, said suction pump having a suction orifice communicating with said flushing zone.

24. A perforation cleaning apparatus adapted to be lowered in a well casing on a tubular string and having packing means cooperable with said casing to isolate a flushing zone adjacent casing perforations to be cleaned, and means for creating a suction influence in said zone to induce an inward flow of well fluid through said perforations comprising a venturi for receiving a motivating fluid passing downwardly through said tubular string for discharge into the casing above said flushing zone, said venturi having a throat communicating with said flushing zone.

25. In an apparatus of the character disclosed, the combination of a body adapted for attachment to the lower end of a tubular string down which a motivating fluid may be pumped, spaced packers carried by said body for sealing engagement with a well casing, said body providing a flow passage to receive the motivating fluid and having a discharge port disposed above the upper of said packers and a suction port between said packers, and a venturi disposed in said flow passage to receive said motivating fluid and discharge through said discharge port and having a throat communicating with said suction port.

CLARENCE E. BURT.