Jan. 2, 1945. S. K. ANDERSEN 2,366,586

OIL COOLER HAVING VISCOSITY CONTROLLED SHUTTER VALVE

Filed May 20, 1941

Fig. 1

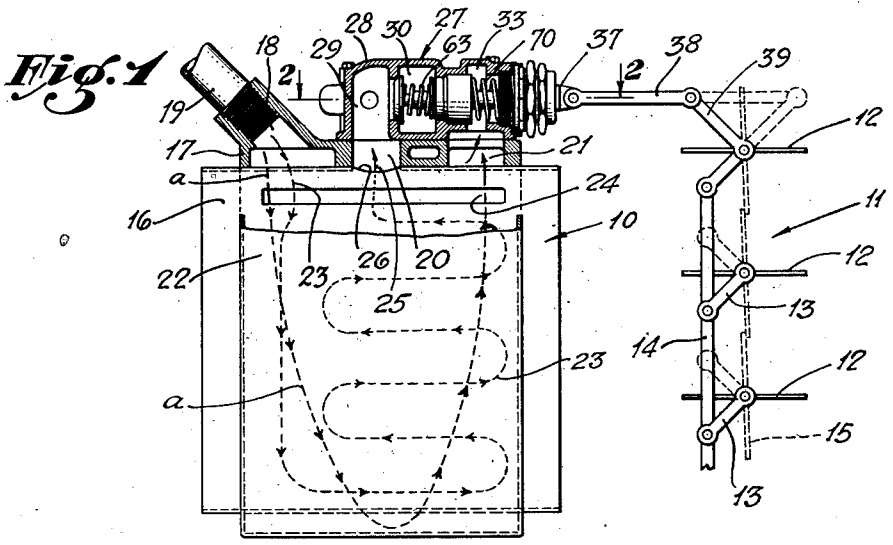

Fig. 2

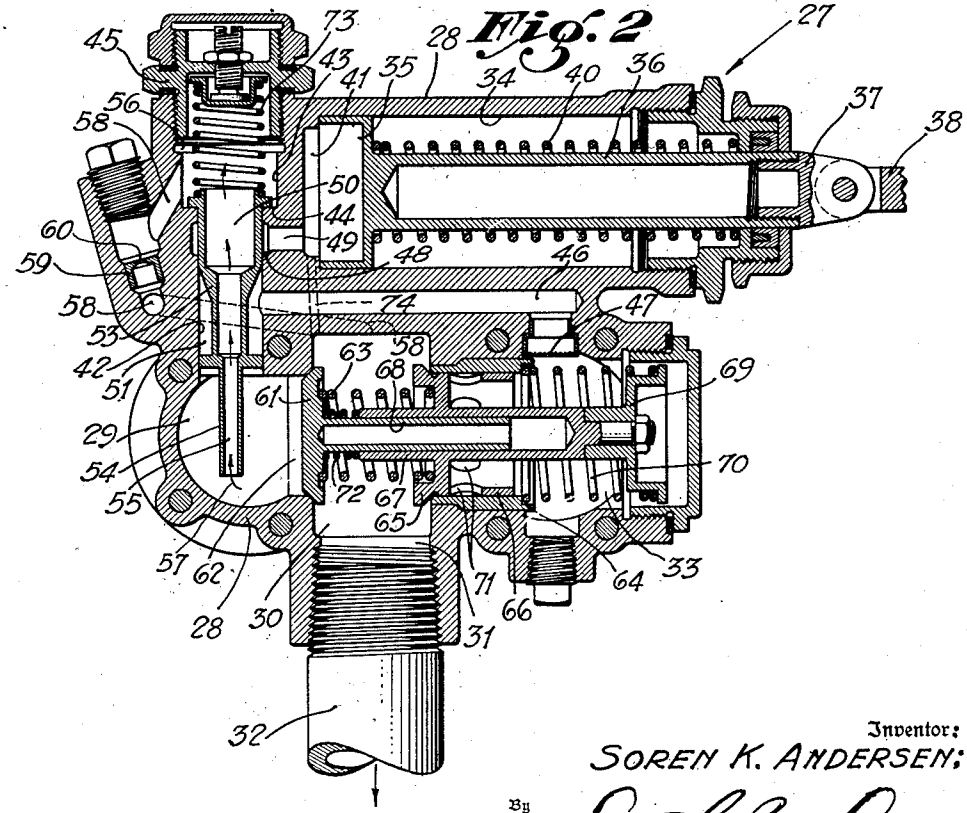

Inventor:
SOREN K. ANDERSEN;

By

Attorney.

Patented Jan. 2, 1945 2,366,586

UNITED STATES PATENT OFFICE

2,366,586

OIL COOLER HAVING VISCOSITY CONTROLLED SHUTTER VALVE

Soren K. Andersen, Los Angeles, Calif., assignor to The Garrett Corporation, Airesearch Manufacturing Company division, Los Angeles, Calif., a corporation of California

Application May 20, 1941, Serial No. 394,280

17 Claims. (Cl. 236—35)

My invention relates to means for controlling the operation of oil coolers, and relates in particular to a control unit having parts sensitive to the condition of the oil which leaves the oil cooler, to control the heat absorbing capacity of the oil cooler.

An object of the present invention is to provide an oil cooling device, which has a simple and effective control responsive to pressure changes and changes in viscosity and temperature of the oil, to control the action of the oil cooler.

Oil coolers ordinarily include passages through which the oil to be cooled is conducted and adjacent passages comprising refrigerant means whereby heat is absorbed from the oil. Simplicity and economy have dictated use of air as a refrigerant for passing through the refrigerant passages of the oil cooler, and accordingly the present invention is disclosed in conjunction with an oil cooler having shutter means for controlling the flow of air through the air tubes or passages of the cooler.

It is an object of the invention to provide a control for a cooling device of the character described having means for producing a pressure differential between two zones in the path of flow of the oil, and to utilize this pressure differential in exercising control over the heat absorbing action of the cooler.

A further object of the invention is to provide a control for a cooling device wherein a pressure differential is produced between two zones in the path of flow of the oil and a by-pass for a flow of oil from one of these zones to the other is established, and the pressure differential and likewise the flow of oil through the by-pass are employed in maintaining control over the operation of the oil cooling device.

A further object of the invention is to provide a device of the character set forth in the preceding paragraph, having control means responsive to changes in viscosity of the oil, which by reason of its construction is quickly responsive to changes in the viscosity of the oil.

A further object of the invention is to provide a control for an oil cooling device which controls the action of the oil cooler with reference to the viscosity of oil which has been cooled by the oil cooler. In the preferred practice of the invention, the control unit thereof is connected to the cool oil outlet of the cooler, but it will be recognized that the control unit may be connected otherwise to the cooler.

An object of the invention is to provide a control for a cooling device of the character described, wherein a predetermined pressure drop is normally caused in the flow of oil and this pressure drop is employed in the operation of parts of the device.

A further object of the invention is to provide a control of the general character set forth in the preceding paragraphs having means for varying the pressure drop. In the preferred practice of the invention, the pressure drop is under limited control of a pressure responsive element connected to the cooler in such a way that when pressure builds up in the cooler due to congealing of the oil, the shutter means associated with the cooler will be moved toward closed position, or the action of the regulating means of the cooler will be changed so that a warm-up of the cooler will occur to produce a thawing out of the congealed oil.

Further objects and advantages of the invention will be brought out in the following part of the specification, which refers to a form of my invention which will overcome disadvantages and shortcomings appearing in devices previously employed for this general purpose, as will be hereinafter pointed out.

Referring to the drawing which is for illustrative purposes only:

Fig. 1 is a partly sectioned, schematic elevational view showing a preferred form of my invention.

Fig. 2 is an enlarged sectional view taken on a plane as indicated by the line 2—2 of Fig. 1.

In Fig. 1 I show an oil cooling device comprising an oil cooler 10 and shutter means 11 for controlling a flow of air through the cooler. The shutter means 11 comprises shutters 12 arranged so as to be moved by suitable levers 13 and linkage 14 from the open position in which they are shown in full lines to the closed position thereof indicated by dotted lines 15.

The diagrammatically shown cooler 10 comprises a shell 16 to which a fitting 17 is attached. This fitting 17 has an inlet opening 18 which may be connected, as by means of piping 19, with the oil pump of an associated internal combustion engine, not shown. The fitting 17 has an outlet port 20 and a bypass chamber 21. The oil to be cooled passes from the inlet opening 18 into a warm-up member 22, comprising a circumferential shell mounted on the cooler shell 16 extending from the front side of the fitting 17 around the shell 16 to the rear side of the fitting 17 and ordinarily referred to as the muff of the cooler. As shown by arrows 23, this inlet oil may pass through a cooler inlet port 24 into the oil spaces

or passages within the shell 16 of the cooler 10, and the cooled oil may pass as indicated by the arrow 25 through the oil outlet opening 26 of the shell 16 into the outlet port 20 of the fitting. The interior of the far side of the warm-up member or muff 22 is connected to the bypass chamber 21 of the fitting so that a bypass flow of oil from the inlet opening 18, through the muff 22 to the bypass chamber, as indicated by the arrows *a*, during by-pass of oil as will be hereinafter described.

A control unit 27 is secured to the fitting 17 as shown in Fig. 1. This control unit 27, as clearly shown in Fig. 2, comprises a shell 28, forming an oil chamber 29 which is connected to the outlet 26 of the cooler through the outlet port 20, an oil outlet chamber 30, having an outlet opening 31 to which oil return piping 32 may be connected, and a chamber 33 which is connected to the bypass chamber 21 of the fitting 17.

To provide a contractile-expansile fluid motor element for actuation of the shutter means 11, a cylinder 34 is provided having a plunger 35 therein, with a rightwardlyprojecting stem 36, the outer end 37 of which is connected through a link 38 with the master operating lever 39 of the shutter means 11. A compression spring 40 is provided to urge the plunger 35 leftward so that as fluid is drained from the cylinder space 41 at the leftward end of the plunger 35, the plunger will be moved leftward and the shutters 12 will be moved toward open position.

A bore 42 extends outward from the oil chamber 29 of the control unit 27 and the outer portion of the bore 42 is expanded, as shown at 43, so as to provide a shoulder 44. The bore 42 is referred to as a blind bore 42, by reason of the fact that the outer end thereof is closed by removable closure means 45. An intermediate portion of the bore 42 is connected with the chamber 33 through a passage 46 having a screen 47 at the inlet thereof. Between the mouth of the passage 46 and the shoulder 44, there is an annular valve port 48 which connects with the cylinder space 41 through a passage 49. The bore 42 slidably receives a valve piston 50 having an annular recess 51 communicating with the passage 46. The far end of the recess 51 is defined by a cone shaped wall 53, having a purpose which will be hereinafter described. The valve piston 50 is tubular and has a thin-walled tube 54 projecting therefrom into the oil chamber 29 and forming an elongated passage or orifice 55 through which oil may flow from the chamber 29 and thence through the interior of the piston 50 into the space 56 of the bore 42 beyond the far end of the piston 50, such flow of oil being indicated by arrows 57. The space 56 is connected with the outlet chamber 30 through a passage 58 having therein an orifice insert 59 in which a very short orifice opening 60 is formed.

The flow of oil from the cooler 10 is through a zone represented by the chamber 29 to a zone represented by the outlet chamber 30. Pressure drop means are provided between the zones to produce a pressure differential between the zones and to normally produce a predetermined pressure in the chamber 29. This pressure drop means comprises a relief valve 61 urged leftwardly so as to close the port 62 between the chambers 29 and 30 by yieldable means comprising a spring 63. The chamber 33 is connected with the outlet chamber 30 through the opening provided by a cylindrical insert 64, and flow of oil from the chamber 33 to the outlet chamber 30 is normally prevented by a bypass valve 65 having a cylindrical skirt 66 extending rightward therefrom and having a tubular stem 67 which receives and guides the stem 68 of the relief valve 61. The rear or rightward end of the stem 67 of the valve 65 has a flanged member 69 secured thereon, and a compression spring 70, disposed between the cylindrical insert 64 and the flanged member 69, exerts a yieldable force tending to hold the valve 65 in closed relation to the opening through the cylindrical insert 64, as shown in Fig. 2. The skirt 66 of the valve 65 has openings 71 therein spaced from the leftward or front end of the valve, so that before oil can pass from the chamber 33 into the outlet chamber 34, the valve 65 must move a prescribed distance against the restraining force of the spring 70 and so as to compress the spring 63, and to engage and compress an auxiliary spring 72, as will be later described.

The present device exercises its control of the cooler 10 with reference to the outlet oil temperature, thereby avoiding the many difficulties resulting from the attempt to employ the temperature of the oil as it leaves the engine as a reference for a control, for the reason that it has been found that the temperature of the oil leaving the engine, or passing into the inlet of the cooler will, as a general rule, remain fairly constant for quite a wide variation in the temperature of the oil returned from the cooler to the engine. The present invention also avoids the many difficulties encountered in an attempt to employ the pressure drop across the cooler as a reference for control of the cooler, since it has been found that the flow from various engines varies as much as 100%, and the devices of this type, although tailor-made to suit the presumed conditions of operation in each individual engine, fail to accomplish the desired purpose by reason of the undependableness of this pressure drop across the cooler, responsibility for which is partly due to fluctuations in the pressure of the oil delivered from the engine to the cooler.

Oil, leaving the cooler as indicated by arrow 25 in Fig. 1, passes into the chamber 29, and leaves this chamber through two separate paths. One path of exit for the cooled oil is through the port 62 into the outlet chamber 30, displacing the valve 61 rightward, as may be necessary. The other path of flow of oil from the chamber 29 is through the elongated passage or orifice 55 and the piston 50, the space 56 and the passage 58 to the outlet chamber 30. The main flow of oil is through the port 62, and the flow of oil through the piston 50 and the passage 58 is regarded as a bypass flow across the pressure drop or pressure differential produced by the valve 61 and its associated parts. The spring 63 is of such size that it will normally produce a pressure differential of about five pounds per square inch between the chambers 29 and 30. This pressure differential is exerted against the piston 50, tending to move the same against a compression spring 73 adjustably disposed in the space 56. The movement of this pressure responsive means is under control of the viscosity of the oil which passes through the bypass. The inlet orifice into the space 56, namely, the elongated passage 55, due to its length and relative slenderness, produces a variation in the inlet flow of oil from the chamber 29 to the space 56 in proportion to the variations in the viscosity of the oil. The outlet orifice 60 of the space 56, being relatively short, controls the outlet flow of oil from the space 56

with reference to changes in pressure in the oil, but with very little change in flow due to changes in viscosity. Accordingly, as the viscosity of the oil increases, there will be a reduction in the rate of flow of oil into the space 56, with a consequent increase in pressure differential between the front and rear ends of the piston 50, so that the piston will be moved in a direction to connect the passage 46 and the annular space 51 with the port 48 or, if the valve is already open, in a direction to increase the flow of oil from the space 51 through the port 48 and the passage 49 into the cylinder space 41. In a converse manner, heating up of the oil and conseguent reduction in the viscosity thereof will result in an increased rate of flow of oil into the chamber or space 56 so as to increase the pressure therein and produce a closing movement of the valve piston 50. The general operation of a viscosity controlled valve arrangement of this character is explained in detail in my copending application, Serial No. 380,257, filed February 24, 1941, for Automatic shutter control for oil cooler, now Patent No. 2,288,877, dated July 7, 1942. My present construction, however, is an improvement over the disclosure of my copending application. The viscosity responsive orifice 55 is formed by a thin-walled tube 54 which projects into the chamber 29. This gives a greater sensitivity of operation for the reason that the response to changes in viscosity are not retarded as a result of the necessity for the oil stream passing through the passage 55 to change the temperature of the wall forming this passage. The wall 54 is relatively thin, and the temperature thereof is quickly changed by external contact to conform to the temperature of the oil in the chamber 29.

Also, the present arrangement avoids the use of a screen in front of the resistance-passage 55, and the diameter of this passage 55 is sufficient to readily pass such particles as might be carried by the oil. It has been observed that when a screen is placed in front of the resistance tube and this screen becomes clogged, the result will be to close the shutter means 11. On the other hand, if the screen is left off, as shown, and the orifice 60 should become clogged, the shutters will be held open, a condition which is not as serious as the other.

The high pressure oil used for moving the plunger 35 is received through the passage 46 from the chamber 33 which is connected through the muff 22 with the inlet opening 18. This high pressure oil passes into the space 51 around a portion of the piston 50, and the oil pressure on the piston is balanced from all sides, so that it may be said that the piston floats in oil. Likewise, as the piston 50 is forced back against the action of the spring 73, oil will pass all around the cone shaped wall 53 into the annular port 48, and the oil will flow out evenly on all sides of the piston, with the result that the piston 50 is centered by the oil flow. In the arrangement shown, the cone shaped wall 53 provides for a metering of the oil as it passes from the space 51 to the port 48, and it is found that in the arrangement shown, the force required to shear off the oil flow at the point of closing is negligible and that maximum freedom of movement of the piston 50 under control of the differential of forces axially applied, is maintained. The position of the plunger 35 in the cylinder 34 is determined by the pressure and volume of the oil accumulating adjacent the leftward face of the plunger 35 as a result of the balancing of the inflow of fluid through the passage 48 with the outflow through the bleeder passage 74, which connects the cylinder space 41 with the outlet chamber 30.

Variations in pressure in the interior of the cooler 10 are reflected in the pressure variations in the warm-up passage or interior of the muff 22. Accordingly, the pressure in the bypass chamber 21 of the fitting 17 and in the thereto connected chamber 33 will vary in accordance with the pressure in the cooler. Congealing of oil within the cooler will increase the pressure required to force the oil through the cooler, and when this pressure reaches a value determined by the strength of the spring 70, Fig. 2, the bypass valve 65 will be forced leftward and oil will be bypassed through the openings 71, from the interior of the muff 22 into the outlet chamber 30. This leftward movement of the bypass valve 65 will result in the application of increased leftward pressure, through the springs 63 and 72, against the pressure drop or pressure differential valve 61 so that there will be an increase in the pressure differential between the chamber 29 and the chamber 30, due to the fact that the escape of oil from the chamber 29 is restricted. This increase in pressure in the chamber 29 will cause the pilot valve 50 to open, thereby producing an increased flow of oil into the cylinder space 41 so that the plunger 35 will be moved rightwardly and a closing action of the shutter means 11 will be attained, thereby reducing or shutting off the flow of air through the cooler, so that a warming up of the interior of the cooler will occur to thaw out the congealed oil. After this thaw-out operation, the normal temperature-viscosity control of the shutter means will be resumed as a result of the return of the respective parts of the device to their normal positions of operation.

I claim as my invention:

1. In an oil cooling device of the character described, the combination of: a cooler adapted to receive oil to be cooled; pressure drop means to produce a pressure drop in oil which has been cooled in said cooler; bypass means for bypassing a flow of said oil from one side to the other of said pressure drop means; means for varying the cooling action of said cooler; means sensitive to the condition and pressure of oil passed through said bypass means for controlling the operation of said means for varying the cooling capacity of the cooler; and means responsive to pressure conditions in said cooler resulting from the thickening of the oil therein to change the action of said pressure drop means so as to increase said pressure drop.

2. In an oil cooling device of the character described, the combination of: a cooler adapted to receive oil to be cooled; pressure drop means to produce a pressure drop in oil which has been cooled in said cooler; bypass means for bypassing a flow of said oil from one side to the other of said pressure drop means; means for varying the cooling action of said cooler; means sensitive to changes in the viscosity and pressure of the oil passed through said bypass means for controlling the operation of said means for varying the cooling capacity of the cooler; and means responsive to pressure conditions in said cooler resulting from the thickening of oil therein to change the action of said pressure drop means so as to increase said pressure drop.

3. In an oil cooling device of the character described, the combination of: a cooler adapted

to receive oil to be cooled; pressure drop means to produce a pressure drop in oil which has been cooled in said cooler; bypass means for bypassing a flow of said oil from one side to the other of said pressure drop means; means for varying the cooling action of said cooler; control means operated by the flow and pressure of oil through said bypass for controlling the action of said means for varying the capacity of said cooler; and means responsive to pressure conditions in said cooler resulting from the thickening of oil therein to change the action of said pressure drop means so as to increase said pressure drop.

4. In a control means for use with an oil cooling device comprising a cooler having an inlet, an outlet, and associated shutter means, the combination of: a shell forming a chamber having an inlet to receive oil which issues from the oil circulating system associated with the cooler; pressure drop outlet means for said chamber, for holding a pressure in said chamber; means responsive to pressure in said chamber to actuate said shutter means; and means operating in response to increase in pressure in said cooler inlet resulting from the thickening of oil in said cooler to actuate said pressure drop means so that it will increase the pressure in said chamber.

5. In a control means for use with an oil cooling device comprising a cooler having an inlet, an outlet, and associated shutter means, the combination of: a shell forming a chamber having an inlet to receive oil which passes through the oil circulating system which is connected to said cooler; pressure drop outlet means for said chamber; bypass means connecting the interior of said chamber with said system following said pressure drop outlet means; shutter control means acting in response to the pressure and condition of the oil flow through said bypass means to actuate said shutter means; and means operating in response to increase in pressure in said cooler inlet resulting from the thickening of oil in said cooler to actuate said pressure drop means so that it will increase the pressure in said chamber.

6. In a control means for use with an oil cooling device comprising a cooler having an inlet, an outlet, and associated shutter means, the combination of: a shell forming a chamber having an inlet to receive oil which passes through the oil circulating system which is connected to said cooler; pressure drop outlet means for said chamber; bypass means connecting the interior of said chamber with said system following said pressure drop outlet means; shutter control means acting in response to the pressure and condition of the oil flow through said bypass means to actuate said shutter means, said shutter control means comprising a part rendering it sensitive to changes in viscosity in the oil comprising said bypass flow of oil; and means operating in response to increase in pressure in said cooler inlet resulting from the thickening of oil in said cooler to actuate said pressure drop means so that it will increase the pressure in said chamber.

7. In a control means for use with an oil cooling device comprising a cooler having an inlet, an outlet, and associated shutter means, the combination of: a shell forming a chamber having an inlet for connection to an oil circulating system so as to receive oil which has been cooled by said oil cooler; pressure drop outlet means for said chamber; bypass means connecting the interior of said chamber with said system following said pressure drop outlet means; shutter control means acting in response to the pressure and condition of the oil flow through said bypass means to actuate said shutter means; and means operating in response to increase in pressure in said cooler inlet resulting from the thickening of oil in said cooler to actuate said pressure drop means so that it will increase the pressure in said chamber.

8. In a control means for use with an oil cooling device comprising a cooler having an inlet, an outlet, and associated shutter means, the combination of: a shell forming a chamber having an inlet for connection to an oil circulating system so as to receive oil which has been cooled by said oil cooler; pressure drop outlet means for said chamber; bypass means connecting the interior of said chamber with said system following said pressure drop outlet means; shutter control means acting in response to the pressure and condition of the oil flow through said bypass means to actuate said shutter means, said shutter control means comprising a part rendering it sensitive to changes in viscosity in the oil comprising said bypass flow of oil; and means operating in response to increase in pressure in said cooler inlet resulting from the thickening of oil in said cooler to actuate said pressure drop means so that it will increase the pressure in said chamber.

9. In a control unit for an oil cooling device of the character described, the combination of: a shell forming a chamber having an inlet and an outlet means for holding a pressure in said chamber but permitting an outlet flow through said outlet means; a motor; means responsive to pressure in said chamber to control the operation of said motor; and means additional to said outlet means operative to vary the action of said outlet means so as to increase the pressure in said chamber in response to thickening of oil in the cooler and thereby vary the operation of said motor.

10. In a control unit for an oil cooling device of the character described, the combination of: a shell forming a chamber having an inlet and an outlet means for holding a pressure in said chamber but permitting an outlet flow through said outlet means; a motor; means responsive to pressure in said chamber to control the operation of said motor; means having a part exposed to the oil in said inlet so that it will be moved in response to changes in fluid pressure applied to it; and means operated by the movement of said part so as to vary the action of said outlet means so as to increase the pressure in said chamber and thereby vary the operation of said motor.

11. In a system for controlling the action of an oil cooling device of the character described, the combination of: means for producing a pressure differential between two zones in the path of flow of the oil; means operative in response to changes in said pressure differential to vary the action of said oil cooling device; and means additional to said pressure differential means for causing said pressure differential to be increased in response to thickening of oil in the cooler.

12. In a system for controlling the action of an oil cooling device of the character described, the combination of: means for producing a pressure differential between two zones in the path of flow of the oil; means operative in response to changes in said pressure differential to vary

the action of said oil cooling device; and means operative in response to changes in pressure in a part of said oil cooling device resulting from the thickening of oil therein for said pressure differential to be increased.

13. In a system for controlling the action of an oil cooling device of the character described, the combination of: means for producing a pressure differential between two zones in the path of flow of the oil; means forming a bypass connecting said zones; means responsive to changes in pressure differential and changes in viscosity in the oil flow through said bypass to vary the action of said oil cooling device; and means operative in response to changes in pressure in a part of said oil cooling device resulting from the thickening of oil therein for causing said pressure differential to be increased.

14. In a control unit for an oil cooling device of the character described, the combination of: a shell forming a chamber having an inlet opening to receive oil and an outlet opening, with pressure-drop means disposed between said chamber and said outlet opening; an expansile contractile motor element; a blind bore leading outward from said chamber; a piston in said bore, said piston having an elongated orifice extending therethrough; yieldable means to urge said piston toward said chamber; means forming a short orifice leading out from the space of said bore behind said piston, whereby the pressure differential acting to move said piston will increase as the result of thickening of the oil which flows through said space; valve means operating in accordance with the movement of said piston to control a flow of oil to said motor element to actuate the same; and means for connecting said motor element to the control mechanism of the oil cooling device.

15. In a control unit for an oil cooling device of the character described, the combination of: a shell forming a chamber having an inlet opening to receive oil and an outlet opening, with pressure drop means disposed between said chamber and said outlet opening, an expansile contractile motor element; a blind bore leading outward from said chamber; a piston in said bore, said piston having an elongated orifice extending therethrough; yieldable means to urge said piston toward said chamber; means forming a short orifice leading out from the space of said bore behind said piston, whereby the pressure differential acting to move said piston will vary with the viscosity of the oil which flows through said space; valve means operating in accordance with the movement of said piston to control a flow of oil to said motor element to actuate the same; means for connecting said motor element to the control mechanism of the oil cooling device; walls forming a pressure chamber to receive oil which varies in pressure in accordance with the changes in the pressure in said oil cooling device as the result of the thickening of the oil in the cooler; a part associated with said pressure chamber so as to be moved in response to an increase in pressure therein; and means operatively connecting said part and said pressure drop means so as to cause said pressure drop means to increase the drop in pressure therethrough when thickening of oil in the cooler occurs.

16. In a control means for use with an oil cooling device comprising a cooler having oil inlet and oil outlet and cooler regulating means for controlling the heat absorbing characteristics of said cooler, the combination of: a shell forming a chamber having an inlet to receive oil from the oil circulating system which is connected to said cooler; pressure drop outlet means for said chamber; bypass means connecting the interior of said chamber with said oil circulating system following said pressure drop outlet means; control means acting in response to the pressure and condition of the oil flow through said bypass means to control said regulating means; and means operating in response to increase in pressure in said cooler inlet resulting from the thickening of oil in said cooler to actuate said pressure drop means so that it will increase the pressure in said chamber.

17. In a control means for use with an oil cooling device comprising a cooler having an oil inlet and an oil outlet and cooler regulating means for controlling the heat absorbing characteristics of said cooler, the combination of: a shell forming a chamber having an inlet to receive oil from the oil circulating system associated with said cooler; pressure drop outlet means for said chamber, for holding a pressure in said chamber; means responsive to pressure in said chamber to control said regulating means; and means operating in response to increase in pressure in said cooler inlet resulting from the thickening of oil in said cooler to actuate said pressure drop means so that it will increase the pressure in said chamber.

SOREN K. ANDERSEN.

CERTIFICATE OF CORRECTION.

Patent No. 2,366,586. January 2, 1945.

SOREN K. ANDERSEN.

It is hereby certified that error appears in the printed specification of the above numbered patent requiring correction as follows: Page 5, first column, line 4, claim 12, after the word "for" insert --causing--; and that the said Letters Patent should be read with this correction therein that the same may conform to the record of the case in the Patent Office.

Signed and sealed this 10th day of April, A. D. 1945.

Leslie Frazer

(Seal) Acting Commissioner of Patents.