United States Patent [19]

Krynicki

[11] **3,912,077**

[45] **Oct. 14, 1975**

[54] **CASSETTE HOLDER**

[76] Inventor: **Witold Krynicki,** 321 Leroy St., Arcadia, Calif. 91006

[22] Filed: **Apr. 4, 1973**

[21] Appl. No.: **347,892**

[52] **U.S. Cl.** **206/387;** 206/817; 220/93; 220/347

[51] **Int. Cl.²** **B65D 85/672**

[58] **Field of Search** ..... 206/387, 250, 804; 220/31 S, 93, 306, 315, 337, 342, 343

[56] **References Cited**

UNITED STATES PATENTS

1,842,442	1/1932	Ames	15/209 R
1,884,030	10/1932	Maddox	206/804
1,957,293	5/1934	Reilly	206/804
2,687,157	8/1954	Cowan	220/31 S
3,086,676	4/1963	Dilatush	220/31 S
3,333,726	8/1967	Belanger	220/31 S
3,381,850	5/1968	Haugen	220/31 S
3,620,361	11/1971	Fugiwara	220/31 S

FOREIGN PATENTS OR APPLICATIONS

854,022	10/1970	Canada	206/387

Primary Examiner—William I. Price
Assistant Examiner—Stephen Marcus
Attorney, Agent, or Firm—Steinberg & Blake

[57] **ABSTRACT**

A cassette holder wherein a container has an interior space capable of accommodating a cassette and is hingedly connected with a cover which is maintained in its closed position by a catch projection on the cover and a catch recess at the container which receives the catch projection. The wall of the container which is formed with the catch recess is sufficiently springy and yieldable so that the operator can depress the catch recess away from the projection to release the cover. A spring structure in the interior of the container engages a cassette therein to displace the cassette to a position extending at least partly outwardly from the container when the cover is released.

1 Claim, 14 Drawing Figures

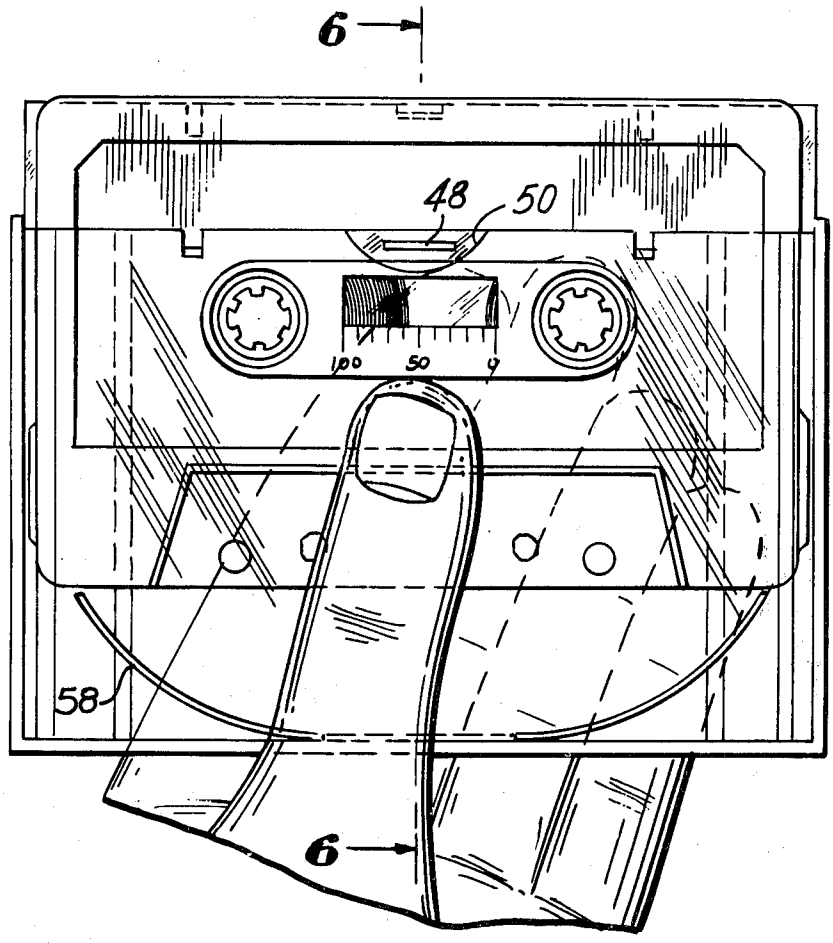

FIG. 1

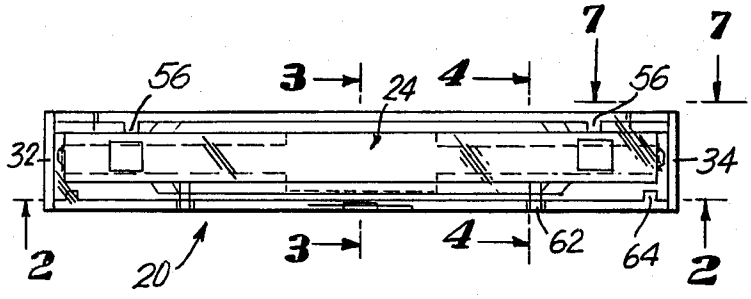

FIG. 2

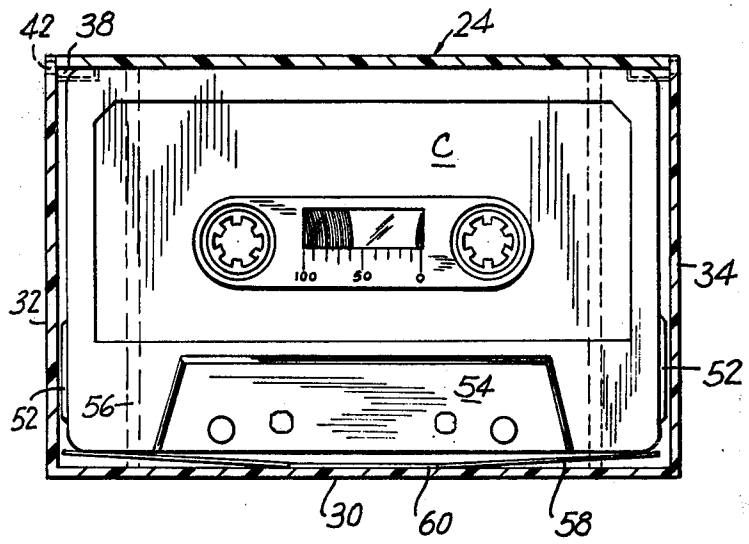

FIG. 3

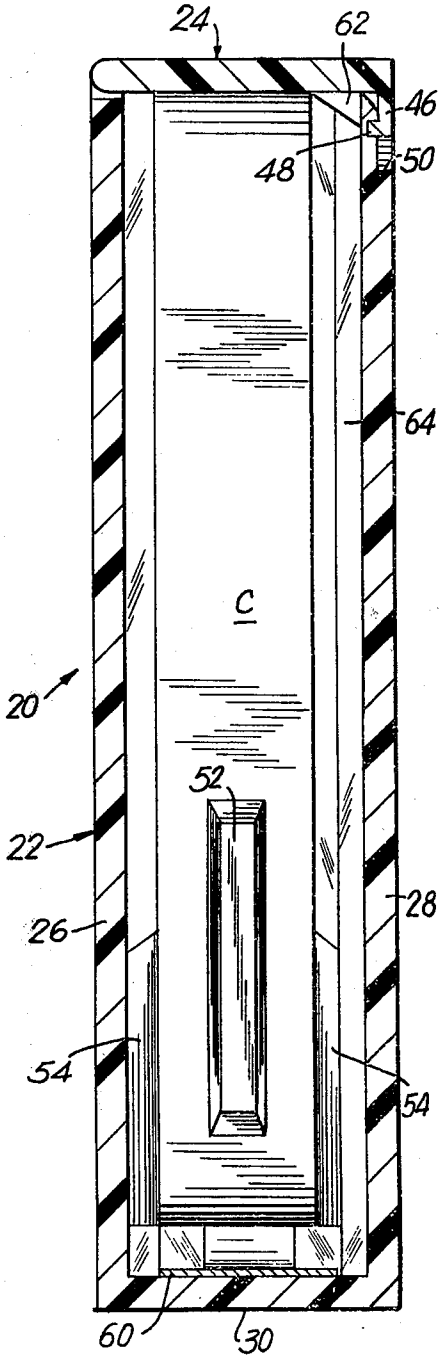

FIG. 4

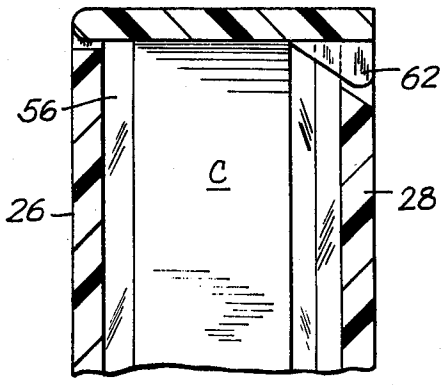

FIG. 5

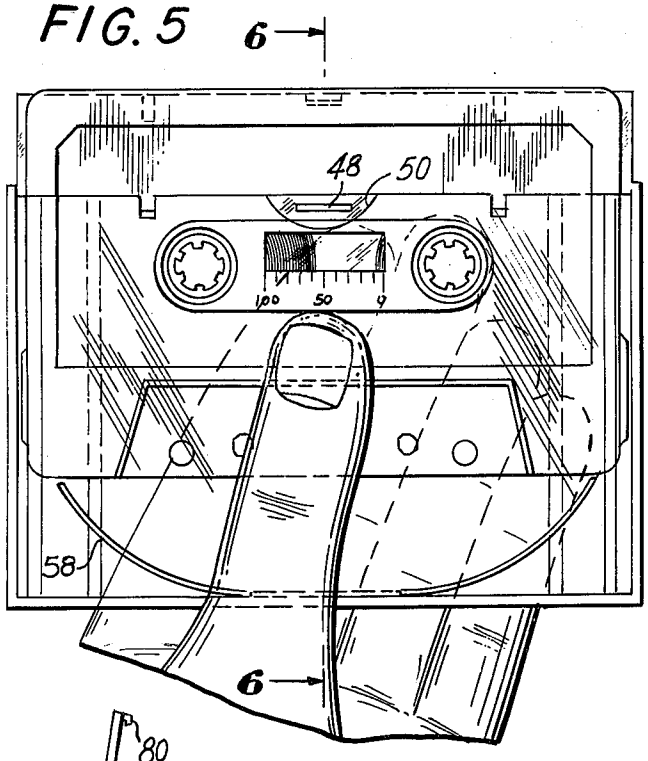

FIG. 6

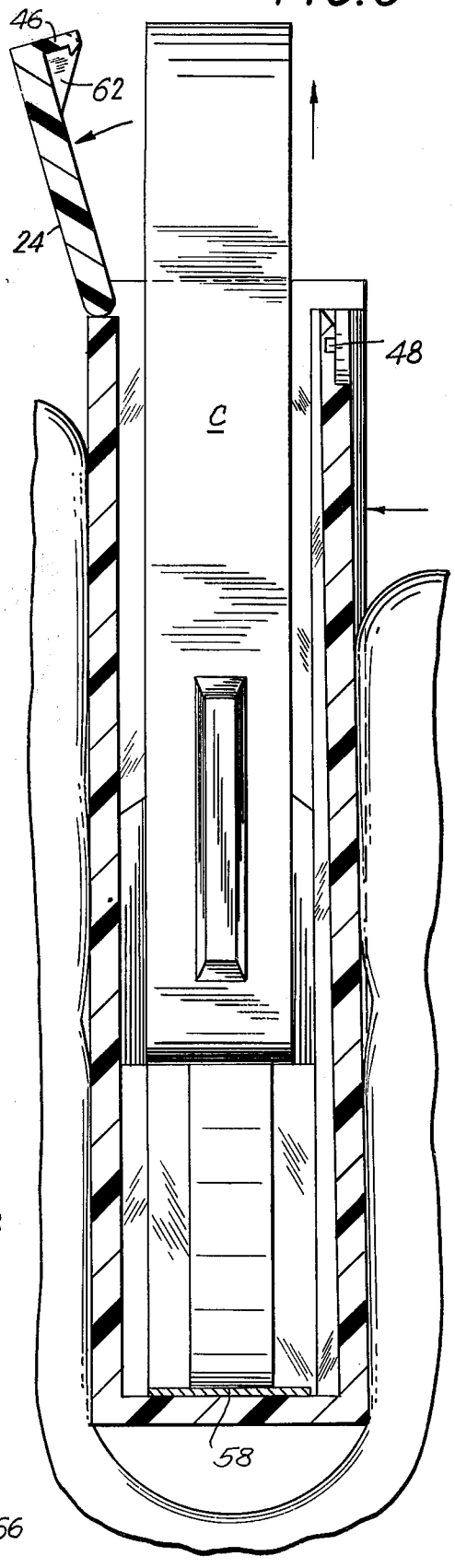



FIG. 8

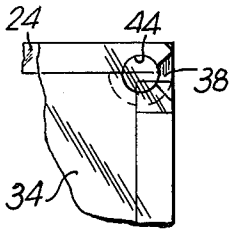

FIG. 7

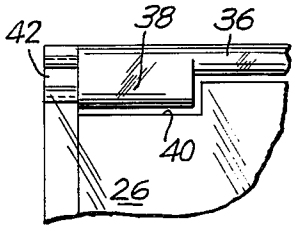

FIG. 9a

FIG. 10

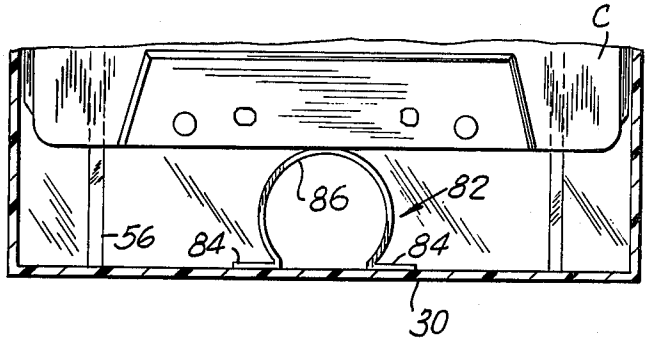

FIG. 9b

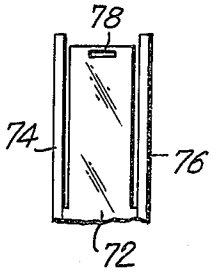

FIG. 11

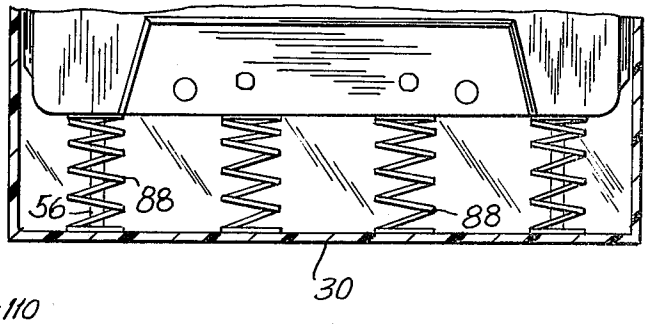

FIG. 12

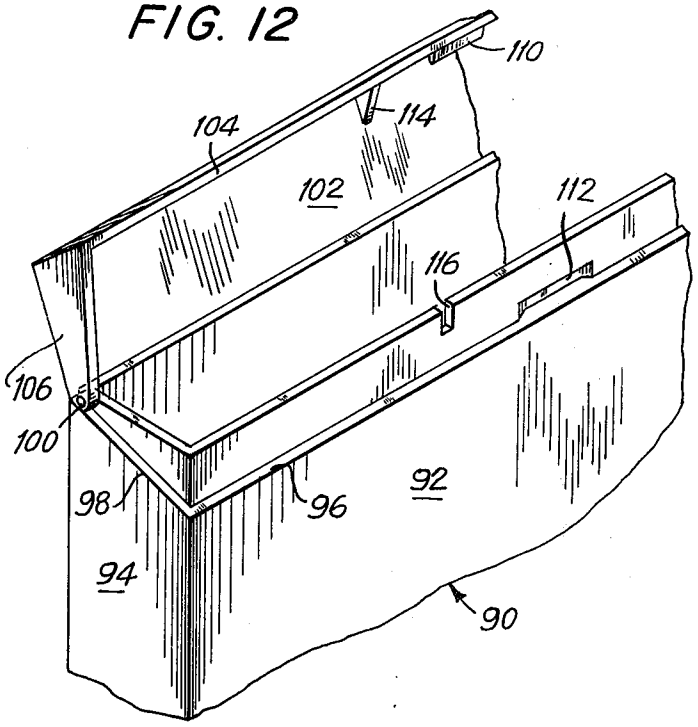

FIG. 13

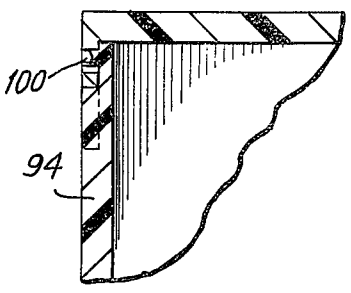

CASSETTE HOLDER

BACKGROUND OF THE INVENTION

The present invention relates to containers.

In particular, the present invention relates to container structure which forms a holder for a cassette.

As is well known, it is necessary to provide holders for cassettes which contain in their interior tapes on which sounds can be recorded and from which the recorded sound can be played back. Such cassettes are of a generally rectangular configuration and are relatively thin. Thus, holders for such cassettes will in general have a corresponding configuration, but conventional holders of this type have certain drawbacks. Thus, because of the relatively delicate nature of such cassettes it is essential that they are reliably retained in the holders, but on the other hand it is also highly desirable to be able to easily and conveniently remove the cassettes from the holders. These two requirements are in conflict with each other because a structure which will reliably hold a cassette in the interior of a container will at the same time render it difficult to remove the cassette from the container. On the other hand, if a container has a construction enabling the cassette to be very easily removed from the container, it does not have a structure which will reliably hold the cassette in the interior of the container.

Furthermore, conventional cassette holders occupy a relatively large space so that a considerable volume of space is required at the present time for accommodating a relatively small number of cassettes. In addition, the known arrangements render it difficult to remove from a number of holders which respectively carry cassettes one particular cassette which may be selected from the number. A further disadvantage of the known cassette holders resides in the fact that they do not have a configuration which gives stability to positioning of the holders on a shelf or the like from which it is possible to remove a selected cassette.

A further problem encountered with constructions of this type resides in the fact that because of the delicate nature of the cassettes they should be stored in such a way that they cannot move about with respect to the holders. If a cassette is loosely mounted within a container, then during transportation of the container the cassette can easily shake around inside of the container and the cassette can then become easily damaged. Up to the present time there has been no satisfactory solution to the problem of holding a cassette in a container in such a way that there can be no relative movement between the cassette and the container.

Yet another drawback of the known constructions resides in the fact that they are relatively complex and expensive and are not capable of being conveniently manipulated in connection with introduction and removal of cassettes from the holders.

SUMMARY OF THE INVENTION

It is accordingly a primary object of the present invention to provide a cassette holder which will avoid all of the above drawbacks.

Thus, it is an object of the present invention to provide a cassette holder which is relatively inexpensive to manufacture and sell, which occupies only a small amount of space, only slightly larger than the cassette itself, and which at the same time can be placed at any desired location with considerable stability.

A particular object of the invention is to provide a cassette holder which is indeed capable of reliably containing a cassette in the interior of the holder but which at the same time permits a cassette to be removed from the holder with great convenience.

Thus, in this latter connection it is a more particular object of the present invention to provide a cassette holder which not only can reliably contain a cassette in the interior of the holder but which at the same time automatically places a cassette in such position that it projects beyond the holder when it is desired to remove the cassette from the holder.

Yet another object of the present invention is to provide a cassette holder which has very few moving components and which is composed in its entirety of simple rugged elements which will operate reliably and which can easily be assembled.

According to the invention the cassette holder includes a container which has a hollow interior space of the same general configuration as but somewhat larger than a cassette so that the latter can be accommodated in this interior space, the container being open at one end but otherwise being completely closed, so that a cassette can be introduced into and removed from the container through the one open end thereof. A cover is hingedly connected to the container and has a configuration generally conforming to the open end of the container so that the cover can be turned with respect to the container between a closed position covering the open end of the container and an open position uncovering the open end of the container. This cover carries a catch projection while a wall portion of the container is formed with a catch recess to receive the projection for retaining the cover in its closed position, and the wall portion of the container which is formed with a catch recess is springy and of sufficient yieldability so that the operator can displace the catch recess away from the projection to release the cover for movement to its open position. A spring means situated in the interior of the container and inner surface thereof which is opposed to the open end of the container, this spring means urging a cassette in the container to a position where the cassette extends in part outwardly beyond the container through the open end thereof, and when a cassette is placed in a container it is pushed into the latter in opposition to the spring means whereupon the cover is placed in its closed position with the catch projection and recess serving to retain the cover in its closed position in opposition to the force of the spring means. In this way the spring means continuously urges the cassette against the cover while at the same time the cassette is retained in the container in a highly reliable manner and in a vibration-free manner.

BRIEF DESCRIPTION OF DRAWINGS

The invention is illustrated by way of example in the accompanying drawings which form part of this application and in which:

FIG. 1 is a top plan view of a cassette holder according to the invention;

FIG. 2 is a section elevation of the structure of FIG. 1 taken along line 2—2 of FIG. 1 in the direction of the arrows;

FIG. 3 is a transverse sectional elevation of the structure of FIGS. 1 and 2 taken along line 3—3 of FIG. 1 in the direction of the arrows;

FIG. 4 is a fragmentary transverse sectional elevation taken along line 4—4 of FIG. 1 in the direction of the arrows;

FIG. 5 is a front elevation illustrating how a cassette projects through an open end of the container to be easily removed therefrom;

FIG. 6 is a transverse sectional elevation similar to that of FIG. 3 but showing the cover in its open position and illustrating in particular how the cover is released;

FIG. 7 is a fragmentary partly sectional elevation taken along line 7—7 of FIG. 1 in the direction of the arrows and illustrating details of the hinged connection between the cover and container;

FIG. 8 is an end view of the structure of FIG. 7 as seen from the left of FIG. 7;

FIG. 9*a* is a front elevation of another embodiment of a cassette holder according to the invention with the cover of FIG. 9*a* being shown in its open position, a cassette being illustrated in a position ready to be withdrawn from the holder;

FIG. 9*b* is a fragmentary end view of the holder of FIG. 9*a* as seen from the right of FIG. 9*a*, showing in particular the structure which serves to releasably hold the cover in its closed position;

FIG. 10 is a fragmentary sectional elevation of the lower end region of a holder, illustrating a different embodiment of a spring means;

FIG. 11 is a fragmentary section elevation also of the lower region of a cassette holder showing a still further embodiment of a spring means of the invention;

FIG. 12 is a fragmentary perspective illustration of a cassette holder which differs from the other embodiments particularly with respect to the construction of the cover and the part of the container which cooperates therewith; and

FIG. 13 is fragmentary longitudinal sectional elevation in a plane which contains the turning axis of the cover of FIG. 12 illustrating the details of the hinged connection of the embodiment of FIG. 12.

DESCRIPTION OF PREFERRED EMBODIMENTS

Referring to FIGS. 1–4, a cassette holder according to the invention is illustrated therein in a closed position with a cassette situated in the interior of the holder. Thus, FIGS. 1–4 illustrate a holder 20 which includes a container 22 and a cover 24. The container 22 and the cover 24 are preferably made of a plastic which is transparent. this plastic being any well known plastic material such as a P.V.C., polystyrene, polyethylene, or the like. In general while the plastic material of the container 22 and cover 24 is completely clear and transparent, at the same time the wall structure used for the container 22 and cover 24 has a certain inherent resiliency for the purpose referred to below.

The container 22 has a rear wall 26, an opposed front wall 28, a bottom wall 30, and a pair of end walls 32 and 34 (FIG. 2). All of these walls are of rectangular configuration with the end walls 32 and 34 being relatively narrow while the front and rear walls 28 and 26 are considerably longer, all of these walls 26, 28, 32, and 34 having the same height and all extending upwardly from the bottom wall 30. These different wall portions may be formed from sheet material and fused together by a suitable solvent or in any other suitable manner so as to form the container 22 which is closed at all parts except its top open end which is defined by the top end edges of the walls 26, 28, 32, and 34. Thus, the open end of the container 22 will have a configuration conforming to the inner surface of the bottom wall 30 which is opposed to the open end of the container. The cover 24 closes the open end of the container when the cover 24 is in its closed position shown in FIGS. 1–4, and the cover 24 is hingedly connected to the container 22 in a manner described in greater detail below for turning movement with respect to the container around an axis which is situated adjacent and is parallel to the top end edge of the rear wall 26.

For the purpose of hingedly connecting the cover 24 to the container 22, the cover 24 has at the region of opposed ends of its rear edge 36 (FIGS. 7 and 8), enlarged thicker portions 38 capable of being received in notches 40 which are formed in the rear wall 26 at its top edge adjacent the opposed of this top edge. The thickened portion 38 at each end of the cover 24 integrally carries a hinge pin 42, and these hinge pins at the opposite ends of the cover 24 have a common axis. The pair of end walls 32 and 34 respectively extend upwardly beyond the notches 40 and are formed at the region of their top ends respectively with a pair of notches 44 of the keyhole configuration illustrated in FIG. 8. Thus, each notch 44 has an inner circular portion communicating with and extending from an outwardly tapered portion of the notch 44. Thus, with this construction it is possible for the pair of hinge pins 42 to be pushed through the tapered outer portions of the notches 44 so as to snap into the inner circular portions thereof to have the position shown in FIGS. 7 and 8. With this simple structure it is possible to easily connect the cover 24 to the container 22 for turning movement with respect thereto about the common axis of the pins 42 so that the cover 24 can turn between the closed position shown in FIG. 3 and the open position shown in FIG. 6.

For the purpose of retaining the cover 24 in its closed position, the cover 24 has a front central wall portion which integrally carries a catch projection 46 (FIG. 3) which is of a generally L-shaped cross section. This catch projection 46 is thus in the form of an angle member which extends through a short distance along a front edge portion of the cover 24 while being integral therewith.

The front wall 28 of the container 22 has an upper central wall portion which is formed with a catch recess 48. This catch recess 48 extends inwardly from an inner surface of an outer recess 50 which is formed in the front wall 28 at the central region of its top edge. As is apparent from FIG. 5, the recess 50 has the configuration of part of a circle, while the catch recess 48 is arranged as illustrated most clearly in FIG. 5.

Because of the springy nature of the sheet material which forms the front wall 28, this sheet material will yield when the cover 24 is turned to its closed position so that the thinner wall portion of the front wall 28 which is formed with the catch recess 48 will easily yield to permit the catch projection 46 to move toward the position shown in FIG. 3 whereupon the wall 28 will snap forwardly so that the catch recess 48 receives the catch projection 46 to hold the cover 24 in its closed position.

As is apparent from FIGS. 1–4, the cassette C, which is conventional, is accommodated in the interior space of the container 22, this space being of the same general configuration as but somewhat larger than the cassette C. Thus, the cassette C has at its opposed ends a

pair of bosses **52** situated relatively close to the inner surfaces of the end walls **32** and **34** of the container **22.** Also the cassette C has in the region of its bottom edge, as viewed in FIGS. **2** and **3,** outwardly projecting bosses **54** of the trapezoidal configuration shown in FIG. **2,** and as is apparent from the lower portion of FIG. **3,** the distance between the front and rear walls **28** and **26** of the container **22** is only slightly greater than the distance between the outer surfaces of the bosses **54.** The rear wall **26** may be provided at its interior with a pair of ribs **56** between which the rear boss **54** at the lower edge region of the cassette C is located.

According to a further feature of the invention, the container **22** carries at the inner surface of bottom wall **30** a spring means **58** which serves to urge the cassette C outwardly to the position shown most clearly in FIG. **6.** This spring means **58** is in the form of an elongated leaf spring which is of a generally U-shaped configuration, as shown most clearly in FIG. **5.** The elongated leaf spring **58** has a central portion **60** which is wider than the elongated end portions of the leaf spring **58** which directly engage the cassette in the manner shown most clearly in FIGS. **2** and **5.** This wider central portion **60** of the leaf spring **58** can be fixed in any desired way to the interior surface of the bottom wall **30** as by being adhered thereto.

When the leaf spring **58** is required only to support the cassette, the leaf spring **58** will have the configuration shown in FIG. **5,** while when the cassette C is in the closed container **22,** the leaf spring **58** will have the configuration shown in FIG. **2** so that the leaf spring **58** opposed the movement of the cassette downwardly into the container from the position of FIG. **5** into the position of FIG. **2.** Thus, the operator will first press the cassette downwardly into the container in opposition to the spring means and will then close the cover, the catch projection **46** being received in the recess **48** to hold the cover in its closed position with the spring means pressing the cassette against the cover, as is apparent from FIGS. **2** and **3.**

According to a further feature of the invention, the cover **24** carries a cam means which acts to displace the cassette C rearwardly so that it will engage the rear wall **26,** or more particularly the ribs **56** thereof. This cam means takes the form of a pair of triangular cam projections **62** which are fixed to the cover **24** at the region of the front edge thereof and which are equidistantly spaced from the catch projection **46.** Thus, this catch projection is situated midway between the cam means formed by the triangular cam projection **62.**

It is to be noted that the front wall **28** also has a pair of inner ribs **64** situated adjacent the end walls **32** and **34,** as shown in FIG. **1,** and the clearance between each front rib **64** and the front surface of the cassette C is apparent from FIG. **3.**

Thus, with the structure of the invention when a cassette is pushed into the container and the cover closed, the cams **62** will engage, at their bottom inclined edges, the top front edges of the cassette C so as to displace the latter rearwardly to the position shown in FIG. **3.** In this way the action of the spring **58** serves to prevent vertical vibratory movement of the cassette by the pressure of the cassette against the top cover **24,** while at the same time the cams **62** hold the cassette directly in engagement with the rear wall **26,** so that in this way vibratory movement between the front and rear walls is also avoided.

Because of the coaction between the projection **46** and the recess **48** the cassette will be reliably retained in the interior of the container **22,** and because of the above features the cassette will not be able to shake about inside the container so that it is reliably maintained therein. When it is desired to remove the cassette from the container, the operator need only push the front wall **28** toward the rear wall **26** in the manner shown in FIG. **6,** so as to displace the catch recess **48** inwardly away from the catch projection **46.** As soon as the operator has deflected the front wall **28** through the short distance necessary to locate the recess **48** inwardly beyond the rearwardly directed tooth of the catch projection **46,** the spring **58** will expand, causing on the one hand the cassette itself to swing the cover **24** to the open position shown in FIG. **6** and on the other hand bringing about displacement of the cassette to the position shown in FIGS. **5** and **6** where it projects outwardly beyond the container through the top open end thereof. As a result the operator can easily grasp the cassette and remove it in a very convenient way from the interior of the container.

Moreover, it will be noted that the container **22** is itself of a simple rectangular configuration having flat outer surfaces so that it can be stored with considerable stability on any flat surface either in an upright or horizontal postion. Moreover because the holder **20** of the invention is only slightly greater than the dimensions of the cassette itself, it is possible to accommodate a large number of holders, with the cassettes respectively situated therein, in a relatively small space which is not much greater than the space required by the cassettes themselves.

FIGS. **9***a* and **9***b* show a variation of the above structure according to which the cover **64** is turnably connected to the container **66** for turning movement with respect thereto about an axis which is parallel to the top end edge of the end wall **68** of the container **66** which is shown in FIG. **9***a*. For this purpose the cover **64** has an enlarged left end provided with a pair of hinge pins **70,** and the front and rear walls of the container **66** are formed with the keyhole notches to which the pins **70** can be snapped, the left end wall **68** of the container **66** being somewhat shorter than the left end wall **32** since this end wall **68** has a top edge situated beneath the thickened portion of the cover **64** which has the hinge pins **70.**

The end wall **72** which is opposite to the end wall **68** and which is shown in FIG. **9***a* is formed with a catch recess **78** for receiving a catch projection **80** fixed to the end of the cover **64** which is opposite from the hinged end thereof. This catch recess **78** is formed adjacent the top end edge of the narrow end wall **72** which is situated between the front wall **74** and the rear wall **76,** as shown in FIG. **9***b*. This end wall **72** is joined to the front and rear walls **74** and **76** except at the region of the upper portion of the end wall **72.** This is shown in an exaggerated manner in FIG. **9***b* for the sake of clarity. The opposed side edges of the upper region of the end wall **72** are situated in engagement with the front wall **74** and rear wall **76** but are not fused thereto. Thus this upper portion of the wall **72** forms a springy tongue so that the catch **80** can spring into the recess **78** while at the same time the upper portion of the wall **72** can be deflected inwardly to release the cover. The part of the end wall **72** below its upper portion which

is yieldable is fused at its front and rear edges to the front and rear walls **74** and **76** in any suitable way.

The embodiment of FIGS. **9***a* and **9***b* does not have any cams, but otherwise except for the above differences it is identical with the embodiment of FIGS. **1–8.** Thus in the case of FIGS. **9***a* and **9***b* it is the front and rear walls **74** and **76** which are formed with the keyhole notches for receiving the hinge pins, and the operator need only to press the cassette C downwardly from the position shown in FIG. **9***a* in opposition to the spring means **58,** whereupon the operator will swing the cover **64** to its closed position where the catch **80** will be received in the recess **78.** When the operator pushes the upper portion of wall **72** inwardly to displace the recess **78** inwardly from the catch **80,** the spring **58** expands to displace the cassette C upwardly to the position shown in FIG. **9***a* while at the same time swinging the cover **64** to the open position thereof shown in FIG. **9***a.* Thus, the embodiment of FIGS. **9***a* and **9***b* will also achieve the advantages of the invention.

The embodiment which is shown in FIG. **10** differs from that of FIGS. **1–8** only in that instead of a leaf spring **58,** the spring means of FIG. **10** takes the form of a leaf spring **82** having a pair of opposed ends **84** engaging the inner surface of the bottom wall **30.** Between these ends **84** the spring means **82** has a curved portion **86** which forms almost a complete circle and which presses against the bottom edge of the cassette C in the manner shown in FIG. **10.** Thus, this embodiment will operate in the same way as the other embodiments except that the spring means will engage only the central bottom surface region of the cassette C while the spring leaf **58** engages the opposed ends of the cassette.

According to the embodiment of FIG. **11,** the spring means is formed by a plurality of coil springs **88** which are joined as by any suitable adhesive to the inner surface of the bottom wall **30.** These springs **88** are arranged in the manner shown in FIG. **11** and will act in the same way as the spring means **82** or the spring means **58** in order to achieve the desired results. Otherwise the embodiment of FIG. **11** is identical with the embodiment of FIGS. **1–8.**

According to the embodiment of the invention which is shown in FIGS. **12** and **13,** the container **90** has a front wall **92** and a pair of opposed end walls **94** which are thinner at the region of their upper edges than at the remainder of these walls **92** and **94.** As a result the walls **92** and **94** are formed with outer shoulders **96** and **98** which are directed upwardly toward the end edges of these walls which define the open end of the container **90** through which the cassette is introduced and withdrawn. At their thinner upper rear portions the opposed end walls **94** are respectively provided with the hinge pins **100** which may be integrally formed with the end walls **94,** as shown particularly in FIG. **13.**

The cover **102** of the embodiment of FIGS. **12** and **13** has a front downwardly directed wall **104** extending from the wall which extends across the top open end of the container **90** when the cover **102** is in its closed position. This front wall **104** will engage the shoulder **96.** The cover **102** also has a pair of opposed substantially triangular end walls **106** which have bottom edges which respectively engage the shoulders **98** of the pair of opposed end walls **94** when the cover **102** is in its closed position. When the cover **102** is turned to its closed position, a catch projection **110** on the cover has a tooth which is received in the catch recess **112** which is formed in the thinner upper wall portion of the front wall **92** in the manner shown in FIG. **12.** In addition, the front wall **104** carries the cams **114** which may be identical with the cams **62** and which serve the same function, these cams being respectively received in notches **116** which are formed in the front wall **92,** only one of the cams **114** and notches **116** being illustrated in FIG. **12.**

The end walls **106** of the cover **102** are capable of being flexed toward and away from each other at their rear tip regions where they are respectively formed with openings capable of receiving the hinge pins **100.** Thus, with this embodiment these rear tip portions of the end walls **106** are flexed apart from each other to snap over the hinge pins **100** so that in this simple way the cover **102** is hingedly connected to the container **90.** When the cover **102** is swung to its closed position, the end walls **106** and the front wall **104** will respectively overlap the upper thinner portions of the end walls **94** and the front wall **92** so that an exceedingly effective closure is achieved, while at the same time the catch **110** will cooperate with the recess **112** to hold a cassette in the container **90** in opposition to the spring means which is at the inner surface of the bottom wall of the container exactly as described above. With this embodiment also when the operator pushes the upper central portion of the front wall **92** inwardly toward the rear wall, the recess **112** will become displaced inwardly from the catch **110** so that the cover **102** is released to the force of the spring which pushes the cassette upwardly through the top open end of the container while at the same time swinging the cover to its open position shown in FIG. **12.**

It is apparent, therefore, that with the above embodiments of the invention a simple inexpensive cassette holder is provided which on the one hand makes it possible to reliably hold a cassette in the interior of the holder while at the same time making it extremely easy to remove a cassette from the holder. Moreover these holders of the invention can be readily stored in any available space in a highly stable manner. Furthermore it will be noted that the cassettes are maintained within the holders of the invention in such a way that they cannot shake around therein so that damage to the cassettes is reliably avoided.

What is claimed is:

1. A cassette holder comprising a container having an interior space which is of the same general configuration as but somewhat larger than a cassette so that a cassette can be accommodated in said space, said container having an open end through which a cassette can be introduced into and removed from said space and said container being closed at all parts thereof except said open end thereof, a cover having a configuration conforming to said open end of said container, said cover being hingedly connected to said container for turning movement with respect thereto between a closed position covering said open end of said container and an open position uncovering said open end of said container, said cover and container respectively having a pair of wall portions, a catch projection fixedly carried by one of said wall portions, and the other wall portion being formed with a catch recess to receive said catch projection for releasably maintaining said cover in its closed position, said other wall portion which is formed with said catch recess being springy and having

a yieldability sufficiently great to permit manual displacement of said other wall portion with said catch recess away from said catch projection to release said cover, while when the latter is turned from said open to said closed position said other wall portion will yield until said catch projection is aligned with said catch recess whereupon said other wall portion will spring back to its initial position for receiving said catch projection in said catch recess, said container having an interior surface opposed to said open end thereof, and spring means situated at said interior surface of said container for displacing a cassette in said container to a position where said cassette is situated partly out of said container extending through said open end thereof when said other wall portion is manually displaced for releasing said cover, so that said spring means will not only displace a cassette to said position located partly out of said container but will also act through said cassette on the cover to swing the latter to its open position, while when a cassette is placed in said container the operator will push the cassette inwardly in opposition to said spring means and will then swing said cover to its closed position where said catch projection is in said recess so that said spring means presses a cassette in said container against said cover while said catch projection and recess hold said cover in said closed position thereof in opposition to the force of said spring means, said open end of said container being of a rectangular configuration and being defined by end edges of a pair of opposed narrow end walls and a pair of opposed longer front and rear walls of said container, said wall portion which is formed with said catch recess being situated at a central region of said front wall, and said cover being hingedly connected to said container for swinging movement with respect thereto about an axis which is situated adjacent and is parallel to said end edge of said rear wall, said cover carrying a cam means for urging a cassette in said container toward said rear wall thereof when said cover is in its closed position, said cam means including a pair of triangular cam projections fixed to said cover equidistantly from said catch projection so that the latter is situated midway between said cam projections, said front wall being formed with a pair of notches extending downwardly from said end edge thereof for receiving said cam projections when said cover is in its closed position.

* * * * *