(12) INTERNATIONAL APPLICATION PUBLISHED UNDER THE PATENT COOPERATION TREATY (PCT)

(19) World Intellectual Property Organization
International Bureau

(43) International Publication Date
17 November 2022 (17.11.2022)

WIPO | PCT

(10) International Publication Number
WO 2022/236375 A1

(51) International Patent Classification:
B29B 11/08 (2006.01) *B29C 49/48* (2006.01)
B29B 11/14 (2006.01) *B29C 49/64* (2006.01)
B29C 49/00 (2006.01) *B29K 67/00* (2006.01)
B29C 49/08 (2006.01) *B29L 23/00* (2006.01)
B29C 49/28 (2006.01) *B29L 31/00* (2006.01)
B29C 49/42 (2006.01)

(21) International Application Number:
PCT/AU2022/050453

(22) International Filing Date:
12 May 2022 (12.05.2022)

(25) Filing Language: English

(26) Publication Language: English

(30) Priority Data:
2021901404 12 May 2021 (12.05.2021) AU
2021901405 12 May 2021 (12.05.2021) AU
2021901414 12 May 2021 (12.05.2021) AU
2021903599 10 November 2021 (10.11.2021) AU
PCT/AU2022/050280 28 March 2022 (28.03.2022) AU

(71) Applicant: **INTEGRATED PLASTICS PTY LIMITED** [AU/AU]; 12 Birmingham Avenue, Villawood, Sydney, New South Wales 2163 (AU).

(72) Inventor: **MELLEN, Nick**; 12 Birmingham Avenue, Villawood, Sydney, New South Wales 2163 (AU).

(74) Agent: **WALLINGTON-DUMMER PATENT AND TRADE MARK ATTORNEYS**; Suite 1005, Level 10, 37 Bligh Street, Sydney, New South Wales 2000 (AU).

(81) Designated States *(unless otherwise indicated, for every kind of national protection available)*: AE, AG, AL, AM, AO, AT, AU, AZ, BA, BB, BG, BH, BN, BR, BW, BY, BZ,

(54) Title: CONTINUOUS STRETCH BLOW MOULDING SYSTEM APPLIED TO SPECIFIED INTEGRAL HANDLE PET PREFORM AND CONTAINER STRUCTURES

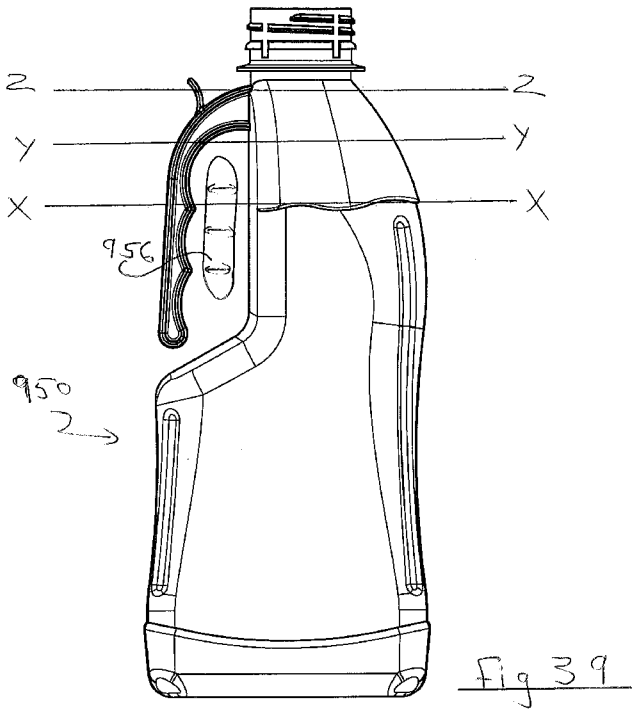

(57) Abstract: A stretch blow moulding system for PET containers with PET integral handles; the containers blown from injection moulded preforms; each preform having the integral handle projecting from a junction point on a body portion of the preform; containers blown in a continuously rotating stretch blow moulding machine of the system. In a preferred form the preforms are progressed continuously at a substantially constant speed; the containers blown therefrom progress at the same substantially constant speed through to the filling and capping machine; and wherein the containers progress continuously through the filling and capping machine at the same substantially constant speed. Also described is a continuous stretch blow moulding system applied to specified integral handle PET preform and PET blown container structures stretch blown from the preforms thereby to obtain variable wall thickness of the

WO 2022/236375 A1

[Continued on next page]

CA, CH, CL, CN, CO, CR, CU, CZ, DE, DJ, DK, DM, DO, DZ, EC, EE, EG, ES, FI, GB, GD, GE, GH, GM, GT, HN, HR, HU, ID, IL, IN, IQ, IR, IS, IT, JM, JO, JP, KE, KG, KH, KN, KP, KR, KW, KZ, LA, LC, LK, LR, LS, LU, LY, MA, MD, ME, MG, MK, MN, MW, MX, MY, MZ, NA, NG, NI, NO, NZ, OM, PA, PE, PG, PH, PL, PT, QA, RO, RS, RU, RW, SA, SC, SD, SE, SG, SK, SL, ST, SV, SY, TH, TJ, TM, TN, TR, TT, TZ, UA, UG, US, UZ, VC, VN, WS, ZA, ZM, ZW.

(84) **Designated States** *(unless otherwise indicated, for every kind of regional protection available)*: ARIPO (BW, GH, GM, KE, LR, LS, MW, MZ, NA, RW, SD, SL, ST, SZ, TZ, UG, ZM, ZW), Eurasian (AM, AZ, BY, KG, KZ, RU, TJ, TM), European (AL, AT, BE, BG, CH, CY, CZ, DE, DK, EE, ES, FI, FR, GB, GR, HR, HU, IE, IS, IT, LT, LU, LV, MC, MK, MT, NL, NO, PL, PT, RO, RS, SE, SI, SK, SM, TR), OAPI (BF, BJ, CF, CG, CI, CM, GA, GN, GQ, GW, KM, ML, MR, NE, SN, TD, TG).

Published:

— *with international search report (Art. 21(3))*

preforms and/or variable wall thickness of the containers.

CONTINUOUS STRETCH BLOW MOULDING SYSTEM APPLIED TO SPECIFIED INTEGRAL HANDLE PET PREFORM AND CONTAINER STRUCTURES

TECHNICAL FIELD

[0001] The present invention relates to the equipment and method for the production of stretch-blow-moulded PET containers from injection-moulded preforms.

[0002] More particularly the present invention relates to a continuous stretch blow moulding system for production of PET containers from PET preforms in a continuous stretch blow moulding process.

[0003] More particularly but not exclusively there are disclosed additional processes and improvement processes for the system including but not limited to controlled variation of the wall thickness of the preforms; controlled variation of the wall thickness of the blown container and more particularly but not exclusively controlled variation as a function of radial angle in a horizontal plane passing through selected sections of the preform; and more particularly but not exclusively controlled variation as a function of radial angle in a horizontal plane passing through selected sections of the blown container.

BACKGROUND

[0004] The process of stretch-blow-moulding polymer containers from a prior injection moulded preform is long established in the art. Generally, preforms, as injection moulded, comprise an elongate cylindrical body portion and a neck. In the stretch blow-moulding process, the preform enters a die, held by the neck which retains its injection moulded shape, and the body is firstly mechanically stretched in at least one direction followed by the injection of air to force the polymer material into the desired shape as defined by the die cavity and also stretching the polymer material in at least one other direction – termed biaxial orientation. Where time has elapsed between the injection moulding of the preforms and their entry into the blow moulding process so that the preforms have cooled to ambient temperature, a preheating process is applied before preforms enter the blow mould die. In the latter case, because the handle of the preform should not be affected by the stretch-blow moulding process, the handle must be inserted into a handle cavity of the mould.

[0005] The process is considerably more complicated if the preform is rotationally non-symmetric and, as in the present case, is injection moulded with an integrally attached handle, and more particularly if the handle is in the form of a loop, integrally attached at two points on the body of the preform. The complication arises primarily from the need to control the orientation of the handle and to correctly preheat the body of the preform while protecting the handle from excessive heat absorption, as well as the correct insertion of the preform into the stretch-blow-moulding die. In the latter case, because the handle of the preform is not affected by the stretch blow-moulding process, the handle must be inserted into the mould to nest into a handle cavity of the mould.

[0006] Such a preform and systems for its transformation into a container with integral handle are disclosed in WO2007101309. The entire disclosure of WO2007101309 is incorporated herein by cross reference. In that disclosure, preforms enter a production machine such as schematically shown in Figures 55 and 72 of that document after orientation of the handle, which orientation is then maintained, through the preheating stage and into the stretch-blow-moulding die.

[0007] In the systems disclosed in WO2007101309 however, the process of production is discontinuous or 'batch'; that is, the production machines progress preforms incrementally,

pausing at each index to allow for pick and place loading of preforms, their insertion into a supporting mandrel and the entry into and exit from the stretch blow-moulding cavities, while the preforms are stopped for each moulding cycle. A disadvantage of this incremental processing is that it is clearly less efficient than a continuous process.

[0008] The present invention relates to a machine and process for the stretch blow moulding of preforms with an integral handle in a continuous feed, thus non-incrementing system. Because of the several stages in the process, the requirements of establishing handle orientation, the preheating stage and the stretch-blow-moulding stage as well as the removal of finished containers, requires the transfer of preforms between rotating in-feed, preheating, moulding and transport elements of the system. A continuous process makes these processes and transfers for a preform with integral handle, considerably more complex.

[0009] A system for handling a non-rotationally symmetric preform requiring a known orientation for selective preheating and prior to loading into a stretch-blow-moulding die was disclosed in US8,632,333 B2. In the arrangement of this patent, orientation is established with reference to a small reference tab or notch, but this preform not having a handle there is no need for orientation relative a heat shield.

[0010] US 2012/0048683 also discloses a continuously rotating blow moulding system in which special precautions are taken against deformation of preforms due to centrifugal forces by specific orientation of the preforms passing through the system. Although it is noted that such orientation may be of benefit for non-symmetric preforms, for example those with a handle, there is no disclosure of orientation of a preform for entry into a handle heat shield.

[0011] US 6779651 specifically teaches the importance of orientation of preforms with handles prior to introduction of the preform into the stretch-blow-moulding die. There is however no suggestion that the handle requires shielding by means of a heat shield so that there is no arrangement in this patent of the control of orientation to marry the handle with a heat shield.

[0012] A suite of patents and applications to Thibodeau, US D746,142 S; US8,524,143 B2; US9,499,302 B2 and WO2015/112440 A1 are drawn to the production of containers with integral handle container stretch-blow-moulded from injection moulded preforms with integral handles. However, in contrast with the arrangement of the present application as set out below, the handle of a container according to Thibodeau is of radically different shape to the handle as injection moulded with the preform, being subjected to a sort of uncurling during the stretch- blow-moulding phase.

[0013] Another continuously rotating blow-moulding system is disclosed in US 5683729 in which mechanisms for the transfer of preforms between various stages of the system are described. There is however no disclosure of preforms with integral handles and thus no treatment of special orientation of the preforms.

[0014] International Patent Application PCT/AU2018/051285 to the present applicant discloses a continuous stretch blow moulding system for integral handle PET containers.

[0015] In order to render the process described in that application it would be advantageous if the process described therein could be improved to require more economical

use of plastic, to permit high throughput notwithstanding distortion that may occur during the reheating o the preforms and efficient accommodation of downstream processes.

[0016] It would be further advantageous if preform wall thickness could be controlled as a function of radial angle in a horizontal plane passing through selected sections of the preform; and if container wall thickness could be controlled as a function of radial angle in a horizontal plane passing through selected sections of the blown container.

[0017] It is an object of the present invention to address or at least ameliorate some of the above disadvantages.

NOTES

[0018] The term "comprising" (and grammatical variations thereof) is used in this specification in the inclusive sense of "having" or "including", and not in the exclusive sense of "consisting only of".

[0019] The above discussion of the prior art in the Background of the invention, is not an admission that any information discussed therein is citable prior art or part of the common general knowledge of persons skilled in the art in any country.

DEFINITIONS

[0020] Continuous preform feed: In this specification, continuous preform feed occurs where preforms are advanced at constant velocity from an entry location to an exit location along a path. This is to be distinguished from a batch mode operation where the preform feed advances and then stops whilst a blow mould operation takes place.

[0021] Non-symmetric preform: In this specification, a non-symmetric preform is a preform which is not symmetric about its longitudinal axis. The primary source of non-symmetry occurs where the preform incorporates an integral handle. In certain embodiments the preform walls are also a source of non-symmetry.

[0022] Integral handle preform: In this specification, an integral handle preform is a non-symmetric preform which has a handle portion extending from a body of the preform and wherein the handle is integrally moulded with the body of the preform.

[0023] Stretch blow moulding die: In this specification, a stretch blow moulding die comprises an openable cavity adapted to receive a preheated preform for subsequent stretch blow moulding of the preheated preform within the cavity of the die.

SUMMARY OF INVENTION

[0024] Accordingly, in one broad form of the invention there is provided a PET container having a neck portion and a body portion to which is integrally connected a PET handle; the PET handle integrally connected at least a first connection point to the container; the PET container blown from a PET preform in a stretch blow moulding process; wherein a region in the form of a strip of PET material is located on the container under the PET handle.

[0025] Accordingly, in a further broad form of the invention there is provided a PET container having a neck portion and a body portion to which is integrally connected a PET handle; the PET handle comprising an elongate portion of PET material integrally connected at at least a first connection point to the container; the PET container blown from a PET preform in a stretch blow moulding process; wherein a region in the form of a strip of PET material is located on the preform and corresponding container opposite the elongate portion of PET material.

[0026] Accordingly, in a further broad form of the invention there is provided a PET container having a neck portion and a body portion to which is integrally connected a PET handle; the PET handle integrally connected at least a first connection point to the container; the PET container blown from a PET preform in a stretch blow moulding process; wherein a region in the form of a strip of PET material is located on the preform and corresponding container opposite the PET handle.

[0027] Preferably the handle and the narrow strip form a solid mass thereby to maintain the integral connection between the handle and the blown container.

[0028] Preferably the integrally connected handle and the narrow strip form a solid connected mass thereby to strengthen the integral connection between the handle and the blown container.

[0029] Accordingly, in a further broad form of the invention there is provided a PET container stretch blow-moulded from a preform; the preform and the container having a neck portion and a body portion to which is integrally connected a PET handle; the PET handle comprising an elongate portion of PET material integrally connected at least at a first connection point on a body portion of the preform and to on the container; the PET container blown from a PET preform in a stretch blow moulding process; wherein a region in the form of a strip of PET material is located on the preform and corresponding container opposite the elongate portion of PET material handle; the strip of material differentiated in thickness from thickness of a wall of the container on a side opposite from that of the connection point.

[0030] Preferably the handle and the narrow strip forms a solid mass thereby to maintain the integral connection between the handle and the blown container.

[0031] Preferably the elongate portion of PET material comprises a stem.

[0032] Preferably the PET handle is connected at a second connection point to the container.

[0033] Preferably the first connection point is an upper connection point.

[0034] Preferably the second connection point is a lower connection point.

[0035] Preferably the preform has a neck portion and an expandable portion located there below the neck portion.

[0036] Preferably the region of the preform body defined by the strip between the two attachment points remains substantially stable during the stretching and blowing of the container.

[0037] Preferably both the regions of the outer and inner surface layers laterally away from the narrow trip are subjected to biaxial stretching.

[0038] Preferably the outer surface of the narrow strip remains substantially stable but the wall of the container at the strip and the inner layers between the handle attachment points undergoes a degree of flow and thinning together with surrounding regions as the plasticised PET material comes under the influence of the stretching and blowing forces.

[0039] Preferably the PET handle is formed in the same mould as and at the same time as the preform is moulded.

[0040] Preferably the loading of plastics material in the region of the wall subtended between the first location and the second location is differentially controlled as a function of location on the circumference of the wall in this region.

[0041] Preferably the region is designated the differential loading region.

[0042] Preferably there is an increased loading of material in the region of immediately between the first location and the second location points whilst, an opposite region located diametrically opposite the differential loading region has is reduced in material thickness removed from it as indicated in dotted outline.

[0043] Preferably the differential material loading is a function of circumferential position on walls of the preform aids in providing control over the wall thickness of the blown container.

[0044] Preferably the stretch blow moulding process is a two stage stretch blow moulding process.

[0045] Preferably the differential loading region subtended between the first location and the second location remains substantially unchanged during the blowing process.

[0046] Preferably the differential loading region is an extension of and part of the neck portion of the preform.

[0047] Preferably the preform includes a symmetrical thickening of the wall of the preform in the lower region of the body portion which extends from immediately below the point of connection of the lower end of handle.

[0048] Preferably at a second, intermediate region located between the first connection point and the second connection point of handle, the wall thickening of the preform tapers gradually from a first thickness T1 to a second thinner thickness T2.

[0049] Preferably the thickening is symmetrical about the longitudinal axis of the preform.

[0050] Preferably the thickening results in a controllable increase in the thickness of material in the blown container in the corresponding intermediate region, and also in a sub-region immediately below the first connection point of the lower end of handle.

[0051] Preferably the thickening results in a controllable increase in the thickness of material in the blown container in the corresponding intermediate region, and also in a sub-region immediately below the second connection point of the lower end of handle.

[0052] Accordingly in a further broad form of the invention there is provided an integral handle of a stretch blow-moulded container and injection moulded preform; the integral handle respectively connected at a single connection region on a body portion of the preform and at a single connection region of a body of the container, wherein the wall thickness of the body portion of the preform and of the container in a region extending below the handle connection region on the body of the container is substantially equal to thickness of adjoining wall regions.

[0053] Preferably the handle extends from the single region on the preform and on the container proximate a neck portion common to both the preform and the container.

[0054] Preferably the handle includes an upper arcuate portion extending from the single connection region; the arcuate upper portion transitioning into a substantially straight, downwardly projecting portion.

[0055] Preferably the handle includes a central web lying in a central plane passing through a centre line of the body portion of the preform and a plane bisecting the body portion of the container.

[0056] Preferably the central web is bounded by an edge; the edge extending continuously around a periphery of the web from an upper junction point to a lower junction point on both the preform body portion and on the body of the container.

[0057] Preferably a rib normal to the web extends along the edge; the rib projecting outwardly and symmetrically from both sides of the plane; the rib and central web forming an I-beam like cross section.

[0058] Preferably the upper and lower connection cross sections of the rib meld with surfaces of both the preform body portion and the body of the container.

[0059] Preferably inward facing sections of both the web and the rib is provided with one or more scalloped configurations; the scalloped configurations aiding in gripping the handle in use.

[0060] Preferably a thumb support is provided projecting from an upper portion of the rib.

[0061] Accordingly in a further broad form of the invention there is provided a method of reducing volume of PET polymer in a container stretch blow-moulded from an injection moulded preform with an integral handle; the handle formed as a loop extending between first and second connection points on the body of the preform; the method including the steps of:

a. changing the integral handle of the preform from the integral handle formed as a loop to a single connect handle extending from a single connection region on the body portion of the preform,

b. reducing wall thickness of the body portion of the preform in a region below the connection region of the single connect handle from a reinforced thickened wall to a thickness equal to wall thickness of adjoining regions of the preform.

[0062] Preferably the handle extends from the single connection region on the preform and on the container proximate a neck portion common to both the preform and the container.

[0063] Preferably the handle includes an upper arcuate portion extending from the single region; the arcuate upper portion transitioning into a substantially straight, downwardly projecting portion.

[0064] Preferably the handle includes a central web lying in a plane passing through a centre line of the body portion of the preform and a plane bisecting the body portion of the container.

[0065] Preferably the central web is bounded by an edge; the edge extending continuously around a periphery of the web from an upper junction point to a lower junction point on both the preform body portion and on the body of the container.

[0066] Preferably a rib normal to the edge extends along the edge; the rib projecting outwardly and symmetrically from both sides of the web; the rib and central web forming an I-beam like cross section.

[0067] Accordingly in a further broad form of the invention there is provided a single connect handle of a stretch blow-moulded container; the container stretch blow-moulded from an injection moulded preform; the preform including an integral handle connected at a single connection region of the preform; the handle extending outward from, and generally parallel, for a section of a body portion of the preform and, wherein wall thickness of the preform in the section of the body portion is equal to wall thickness of adjacent regions of the preform.

[0068] Accordingly in a further broad form of the invention there is provided an injection moulded preform with integral handle for stretch blow-moulding a container with an integral handle; the preform having a cylindrical body portion extending from below a neck of the preform and a curved closure at a base of the body portion; walls of the cylindrical body portion of the preform being of constant thickness.

[0069] Preferably the integral handle is connected to the preform at a single connection region; the handle extending outwardly and generally parallel for a section of the body portion of the preform.

[0070] Accordingly in a further broad form of the invention there is provided a PET container stretch blow-moulded from a preform; the preform and the container having a neck portion and a body portion to which is integrally connected a PET handle; the PET handle comprising an elongate portion of PET material integrally connected at least at a first connection point on a body portion of the preform and on the container and wherein perform wall thickness is controlled so that the wall thickness of corresponding locations on the blown container **1428** is such that the wall thickness **1421B** in the region of the container **1420B** located beneath the handle **1426** and on the side of the container closest to the handle **1426**

may be differentiated from the wall thickness **1441B** in a region **1440B** located on an opposite side of the container **1428** from the region **1420B.**

[0071] Preferably the handle and the narrow strip form a substantially planar region thereby to maintain the integral connection between the handle and the blown container.
[0072] Preferably the elongate portion of PET material comprises a stem.
[0073] Preferably the PET handle is connected at a second connection point to the container.
[0074] Preferably the first connection point is an upper connection point.
[0075] Preferably the second connection point is a lower connection point.
[0076] Preferably the preform has an expandable portion located below the neck portion.
[0077] Preferably the region of the preform body defined by the strip between the two attachment points remains substantially stable during the stretching and blowing of the container.
[0078] Preferably both the regions of the outer and inner surface layers laterally away from the narrow trip are subjected to biaxial stretching.
[0079] Preferably the outer surface of the narrow strip remains substantially stable but the wall of the container at the strip and the inner layers between the handle attachment points undergoes a degree of flow and thinning together with surrounding regions as the PET material comes under the influence of ~~the~~ stretching and blowing forces.
[0080] Preferably the PET handle is formed in the same mould as and at the same time as the preform is moulded.
[0081] Preferably loading of plastics material in the region of the wall subtended between the first location and the second location is differentially controlled as a function of location on the circumference of the wall in this region; the region designated the differential loading region.
[0082] Preferably there is an increased loading of material in the region immediately between the first location and the second location points whilst, ~~he~~ an opposite region located diametrically opposite the differential loading region is reduced in material thickness.
[0083] Preferably differential material loading as a function of circumferential position on walls of the preform aids in providing control over the wall thickness of the blown container.
[0084] Preferably the stretch blow molding process is a two stage stretch blow molding process.
[0085] Preferably the differential loading region subtended between the first location and the second location remains substantially unchanged during the blowing process.
[0086] Preferably the differential loading region is an extension of and part of the neck portion of the preform.
[0087] Preferably the preform includes a symmetrical thickening of the wall of the preform in the lower region of the body portion which extends from immediately below the point of connection of the lower end of handle.
[0088] Preferably at a second, intermediate region located between the first connection point and the second connection point of handle, the wall thickening of the preform tapers gradually from a first thickness to a second thinner thickness.
[0089] Preferably the thickening is symmetrical about the longitudinal axis of the preform.
[0090] Preferably the thickening results in a controllable increase in the thickness of material in the blown container in the intermediate region, and in a sub-region immediately below the second connection point of the lower end of handle.

[0091] Accordingly in a further broad form of the invention there is provided a method of controlling a preform for stretch blow-moulding a container with an integrally formed handle; the preform comprising a body portion and the integrally formed handle; the preform transferred from a perform supply source to a blow moulding die for blowing the container; the method including the steps of

- passing the preform through a preform handle orientating apparatus,
- transferring the preform to a preform transportation system,
- maintaining orientation of the preform handle imposed by the perform handle orientating apparatus during transfer to the perform transportation system and transfer to the blow moulding die,
- rotating the preforms during transport along the transportation system past an array of preform heating elements while shielding the integrally formed handle from excessive exposure to the heating elements,
- transferring the preform from the transportation system to the blow moulding die, and

wherein the handle comprises orientable plastic material extending from at least an upper connection region on the body portion of the preform; characterised in that the handle includes a curved strengthening element at a lower end of the handle; the orientable plastic material bifurcating to form an enclosed generally triangular element.

[0092] Preferably the handle extends from the upper connection region to a lower connection region on the body portion of the preform.

[0093] Preferably the curved strengthening element abuts the body portion of the preform and the body of the blow moulded container.

[0094] Preferably the curved strengthening element conforms generally in width and cross section to width and cross section of the handle.

[0095] Preferably the handle has a gradually widening cross section approaching the upper connection region; the cross section reaching and maintaining a maximum width proximate the upper connection region cross section of the handle.

[0096] Preferably the cross section extends from opposing outer edges towards a central line; the cross section increasing in thickness progressively from the outer edges to a maximum thickness at the central line.

[0097] Preferably the handle includes a straight section angling downwardly from a lower connection region and an arcuate section extending from an end of the straight section to the upper connection region.

[0098] Preferably integrally moulded first, second and third strengthening elements are provided respectively at each of the upper connection region and the lower connection region and at the junction between the straight section and the arcuate section.

[0099] Preferably the first strengthening element at the upper connection region comprises a first curved element conforming in width and in cross section to the width and cross section of the handle proximate the upper connection region; the first curved element extending from a first separate connection region below the upper connection region to merge with the handle proximate to a first end of the maximum width of the handle.

[00100] Preferably the second strengthening element at the lower connection region comprises a straight element conforming in width and cross section with the width and cross section of the straight section of the handle; the straight element extending from a second separate connection region above the lower connection region to a merge with the straight section of the handle proximate the lower connection region.

[00101] Preferably the third strengthening element at the junction of the straight and arcuate sections of the handle comprises a further curved element conforming in width and cross section with the width and cross section of the handle adjacent the junction of the straight and arcuate sections of the handle; respective outer ends of the curved element merging with the straight and arcuate sections of the handle.

[00102] Preferably each strengthening element includes a web of orientable plastic material within boundaries formed respectively between the body of the preform and the first and second strengthening elements, and between the third strengthening element and the straight and arcuate sections; each web of orientable plastic material aligned with and extending equally in both directions from the central line.

[00103] Accordingly in a further broad form of the invention there is provided a method of reducing strain on a supporting finger of a hand lifting a blow-moulded container; the container provided with an integral handle; the method including:

- stretch blow-moulding the container from a preform which includes an orientable plastic material forming the handle; the orientable plastic material extending from at least an upper connection region, and
- wherein the handle includes a curved strengthening element at a lower end of the handle; the orientable plastic material bifurcating to form an enclosed generally triangular element.

[00104] Preferably the handle extends from the upper connection region to a lower connection region on the body portion of the preform.

[00105] Preferably the curved strengthening element abuts the body portion of the preform and the body of the blow moulded container.

[00106] Preferably the curved strengthening element conforms generally in width and cross section to width and cross section of the handle.

[00107] Preferably a strengthening element proximate the upper connection region; the strengthening element comprises a first curved element conforming generally in width and in cross section to a width and cross section of the handle proximate the upper connection region; the first curved element extending from a first separate connection region below the upper connection region to merge with the handle proximate to a first end of a maximum width of the handle.

[00108] Accordingly in a further broad form of the invention there is provided a handle of a stretch blow moulded container; the container blown from a preform including the handle extending from at least an upper connection region; the handle including a curved strengthening element at a lower end of the handle; the curved strengthening element

conforming generally in width and cross section to width and cross section of the handle; the orientable plastic material bifurcating to form an enclosed generally triangular element.

[00109] Preferably the handle extends from the upper connection region to a lower connection region on the body portion of the preform.

[00110] Preferably the curved strengthening element abuts the body portion of the preform and the body of the blow moulded container.

[00111] Preferably the curved strengthening element conforms generally in width and cross section to width and cross section of the handle.

[00112] Preferably the handle further includes a straight lower section and an arcuate section extending from an end of the straight lower section to the upper connection region; the handle having a gradually widening cross section approaching the upper connection region; the cross section reaching and maintaining a maximum width proximate the upper connection region.

[00113] Accordingly in a further broad form of the invention there is provided a blown container formed according to any of the above methods.

[00114] Accordingly in a further broad form of the invention there is provided a blown container incorporating the handle as described above.

[00115] Accordingly in a further broad form of the invention there is provided a preform having a handle: the preform being formed in a first production step of a stretch blow moulded container; the container blown from the preform including the handle extending from at least an upper connection region; the handle including a straight lower section and includes a curved strengthening element at a lower end of the handle; the orientable plastic material bifurcating to form an enclosed generally triangular element.

[00116] Preferably the handle extends from the upper connection region to a lower connection region on the body portion of the preform.

[00117] Preferably the curved strengthening element abuts the body portion of the preform and the body of the blow moulded container.

[00118] Preferably the curved strengthening element conforms generally in width and cross section to width and cross section of the handle.

[00119] In preferred forms, all of the above cavities, systems, preforms, processes, containers, handles, features and methods are effected in a continuously rotating, non-symmetric preform feed, stretch-blow-moulding machine dedicated to the stretch-blow-moulding of containers from non-symmetric injection moulded preforms; the non-symmetric preforms including an integral handle extending from a junction point on a body of the preform; the body of the preform and the integral handle constituted from the same material.

[00120] Additional features of the machine in preferred forms are outlined immediately below:

[00121] Accordingly, in one broad form of the continuously rotating, non-symmetric preform feed, stretch-blow-moulding machine there is provided a continuously rotating, non-symmetric preform feed, stretch-blow-moulding machine dedicated to the stretch-blow-moulding of containers from non-symmetric injection moulded preforms; the non-symmetric preforms including an integral handle extending from a junction point on a body of the preform; the body of the preform and the integral handle constituted from the same material.

[00122] In a further broad form of the continuously rotating, non-symmetric preform feed, stretch-blow-moulding machine there is provided a method of controlling paths of grippers of pick and place apparatuses of rotating transfer systems; the rotating transfer systems operating in a continuous non-symmetric preform feed stretch-blow-moulding machine; the paths of the grippers following respective loci of non-symmetrical preforms as preforms are transferred by the rotating transfer systems from a preform pick off position, inserted into and extracted from a preform support mandrel of a preheating stage and inserted into and extracted as a stretch-blow-moulded containers from rotating stretch-blow-moulding dies; the non-symmetrical preforms comprising a body portion and an integral handle extending from the body portion; the method including the step of rotationally mounting each of the pick and place apparatuses on a rotating arm of a respective rotating transfer system.

[00123] In a further broad form of the continuously rotating, non-symmetric preform feed, stretch-blow-moulding machine there is provided a method of transferring a non-symmetric preform between stages of a continuous non-symmetric preform feed rotating stretch-blow-moulding machine; the non-symmetric preform being transformed into a stretch-blow-moulded container by a step of stretching and blowing the non-symmetric preform in a cavity of the stretch-blow-moulding die; the method including the step of orienting the non-symmetrical preform so that an integral handle of the preform has a known orientation at arrival at a pick off position in the machine.

[00124] In a further broad form of the continuously rotating, non-symmetric preform feed, stretch-blow-moulding machine there is provided a method of manipulating a non-symmetrical injection moulded preform into a stretch-blow-moulding die of a continuous preform feed stretch-blow-moulding machine; the method including the step of extracting a preform from a preform preheating stage with a pick and place apparatus of a continuously rotating transfer system such that an integral handle of the preform has a predetermined orientation.

[00125] In a further broad form of the continuously rotating, non-symmetric preform feed, stretch-blow-moulding machine there is provided a method of controllably heating a pre-form to a die introduction temperature; the pre-form having a neck portion extending from a body portion; said pre-form further having a handle portion extending radially; said method comprising controllably transferring an integral handle PET pre-form onto a continuously moving conveyor; securing the preform by its neck portion to the conveyor whereby the preform is transported by the conveyor at substantially constant velocity along a reheating path from a pre-form entry location to a pre-form exit location.

[00126] Preferably at least portions of the pre-form controllably heated to the die introduction temperature by the time it reaches the pre-form exit location.

[00127] Preferably a controllable heater array distributed along the path arranged to direct heat to selected portions of the pre-form.

[00128] Preferably the pre-form controllably transferred from the preform exit location into a die for stretch blow moulding of the pre-form thereby to form a blown container.

[00129] In a further broad form of the continuously rotating, non-symmetric preform feed, stretch-blow-moulding machine there is provided a method of orienting a non-symmetrical preform for entry to stages of a stretch blow-moulding machine; the none symmetrical preform including an integral handle extending from a first junction point below a neck of the preform to a second junction point on the body of the preform; the method including the step of providing preforms to slide down inclined rails towards an orientation mechanism while supported by the necks of the preforms along upper rails of the inclined rails.

[00130] In a further broad form of the continuously rotating, non-symmetric preform feed, stretch-blow-moulding machine there is provided a continuously rotating, non-symmetric preform feed, stretch-blow-moulding machine in which injection-moulded preforms with integral handles are transferred from a first transfer system to a preheating stage; the transfer of a preform from a gripper of the first transfer system to a preform supporting mandrel achieved in one fluid motion as a vertical axis of the preform is brought into alignment with a vertical axis of the preform supporting mandrel and the handle of the preform is slid into a heat shield provided on the mandrel.

[00131] Accordingly in further broad form of the continuously rotating, non-symmetric preform feed, stretch-blow-moulding machine there is provided a continuous non-symmetric preform feed stretch-blow-moulding machine dedicated to the stretch-blow-moulding of containers from non-symmetric injection moulded preforms; the non-symmetrical preforms including an integral handle extending from a first junction point to a second junction point on a body of the preform; the body of the preform and the integral handle constituted from the same material; the machine including a preform orientation system to orient the handle of the preform into a known orientation at arrival at a pick off position.

[00132] Preferably the preforms are in continuous motion from an initial preform pick off point through stretch-blow-moulding into the containers and ejection from the machine as stretch-blow-moulded containers.

[00133] Preferably the integral handle retains a shape of the handle as injection moulded through all stages of the stretch-blow-moulding machine to forming a handle on the stretch-blow-moulded container.

[00134] Preferably the stages of the stretch-blow-moulding machine include a handle orientation stage; all preforms arriving at the pick off point having the integral handle oriented in a predetermined direction relative to motion of the preform approaching the pick off position.

[00135] Preferably the stages of the stretch-blow-moulding machine include a continuously rotating first transfer system transferring preforms from a continuously rotating preform feeder wheel at the preform pick off position to a transfer to preheating position at a continuously rotating preheating stage.

[00136] Preferably a first pick and place apparatus of the first transfer system includes a preform grasping gripper; reciprocating rotation and linear displacement of the grasping

gripper induced by a combination of a rotating carrier of the pick and place apparatus and two cam loci.

[00137] Accordingly in a further broad form of the invention there is provided a method of controllably heating a pre-form to a die introduction temperature; the pre-form having a neck portion extending from a body portion; said pre-form further having an integrally injection-moulded handle portion extending radially; said method comprising

- controllably transferring an integral handle PET pre-form onto a continuously moving conveyor while maintaining a known orientation of the handle portion;
- securing the preform by its neck portion to the conveyor whereby the preform is transported by the conveyor continuously from a pre-form entry location to a pre-form exit location;
- at least portions of the pre-form controllably heated to the die introduction temperature by the time it reaches the pre-form exit location;
- a controllable heater array distributed along the path conveyor arranged to direct heat to selected portions of the pre-form;
- the pre-form controllably transferred from the preform exit location into a die for stretch blow moulding of the pre-form thereby to form a blown container, and

wherein the preform comprises an open neck portion and a hollow body extending from the neck portion; at least a portion of the walls of the hollow body varying in thickness, and wherein cross sections of at least a portion of inner surface of the hollow body are ovoid in section.

[00138] Preferably the handle portion is solid and has a first end and a second end; the first end integrally connected at a first, upper location to the pre-form; the second end integrally connected at a second, lower location to the pre-form.

[00139] Preferably the first, upper location is located on the body portion.

[00140] Preferably the first, upper location is located on the neck portion.

[00141] Preferably the second, lower location is located on the body portion.

[00142] Preferably the elements are arranged in modules; the modules arrayed around the continuously rotating preform conveyer; the elements controlled as a group based on height wherein the top most elements of the modules are controlled to a predetermined temperature together whilst the next down in height elements are also controlled together to a predetermined temperature – and so on down to elements at the lowest level.

[00143] Preferably a processor controls the speed of rotation of a motor in order to control the continuous speed of advancement of the preforms.

[00144] Preferably a temperature sensor provides environment temperature sensing which is utilised by processor to modulate the degree of heating of all elements by a difference factor delta (Δ).

[00145] Preferably the step of controllably transferring the integral handle PET pre-form onto the continuously moving conveyor includes orienting the handle of the preform into a known orientation at arrival at a pick off position.

[00146] Preferably the preform comprising an open neck portion and a hollow body extending from the neck portion; the preform further including an integrally injection-moulded handle; at least a portion of walls of the hollow body varying in thicknesses.

[00147] Preferably at least a portion of an inner surface of the hollow body is non-concentric with outer surfaces of the hollow body.

[00148] Preferably the outer surfaces of the hollow body are defined by diameters centred on a central longitudinal axis of the preform to form a substantially cylindrical body.

[00149] Preferably the cross sections of at least a portion of the inner surface of the hollow body are ovoid in section.

[00150] In a further broad form of the invention there is provided a method of optimizing wall thickness in a stretch-blow-moulded container; the method including the steps of:

- injection moulding hollow preforms in which at least a lower portion of each preform has internal cross sections non-concentric with external surfaces of the lower portion,
- bringing the preforms to a temperature suitable for stretch-blow-moulding,
- inserting the preforms into cavities of a stretch-blow-moulding machine,
- mechanically stretching the preforms and injecting air to form the container.

[00151] In yet a further broad form of the invention there is provided a mandrel forming internal surfaces of an injection-moulded hollow preform; the mandrel including at least one portion with cross sections which are non-concentric with diameters defining outer surfaces of the preform.

[00152] In yet a further broad form of the invention there is provided a method of biasing distribution of polymer material from walls of at least one portion of a preform to selected side walls of a container stretch-blow-moulded from the preform as defined above; the method including the steps of:

- arranging a mandrel defining inside surfaces of the preform with cross sections of the at least one portion which are non-concentric with corresponding outer surfaces of the preform as defined by a cavity of a preform injection moulding die,
- arranging the mandrel in the injection moulding die such that major axes of the cross sections of the mandrel of the at least one portion are aligned with a central vertical plane of the cavity,
- injection moulding the preform,
- introducing the preform into a cavity of a stretch-blow-moulding machine such that the central vertical plane of the preform is aligned with a central vertical plane of a blown container of generally rectangular cross section, and

wherein the central vertical plane of the container is parallel to opposing longer sides of the container.

[00153] Preferably the centres of the cross sections of ovoid shape are centred on a longitudinal axis of the preform.

[00154] Preferably the centres of the cross sections of ovoid shape are offset from a longitudinal axis of the preform.

[00155] Preferably the centres of circular cross sections of a portion of the hollow body are offset from a longitudinal axis of the hollow body.

BRIEF DESCRIPTION OF DRAWINGS

[00156] Embodiments of the present invention will now be described with reference to the accompanying drawings wherein:

[00157] Figure 1 is a side view of a perform with integral handle for stretch blow-moulding a container by means of a continuous blow moulding machine;

[00158] Figure 2 is a side view of a container with integral handle stretch blow-moulded from the preform of Figure 1;

[00159] Figure 3 is a plan view of the stretch blow-moulding machine producing the container of Figure 2;

[00160] Figure 4 is a side view of a preform orientation and loading section of the machine of Figure 3;

[00161] Figure 4A is a plan view of the preform orientation and loading section of the machine of Figure 3;

[00162] Figure 4B is a plan view of a further preferred embodiment of a preform orientation arrangement for the machine of Figure 3;

[00163] Figure 4C is a side elevation view of the orientation arrangement of Figure 4B;

[00164] Figure 4D is a perspective view from below of the orientation arrangement of Figures 4B and 4C;

[00165] Figure 5 is a plan view of a loading end of the preform orientation and loading section of Figure 4 and a first preform transfer system;

[00166] Figure 6 is a side view of the first preform transfer system of Figure 5;

[00167] Figure 7 is a plan view of a portion of the preform transfer system of Figures 5 and 6 and a preform loading and unloading area of a preform preheating stage of the machine;

[00168] Figure 8 is a perspective view of a perform of Figure 1 inserted into a mandrel with heat shield for transport through the preform preheating stage of the machine;

[00169] Figure 9 is an enlarged plan view of section of the machine showing a portion of the preform loading and unloading area of Figure 7, a second transfer system and a portion of the stretch-blow-moulding dies assembly of the machine;

[00170] Figure 10 is a front view of one half of a stretch-blow- moulding die for the production of the container shown in Figure 2;

[00171] Figure 11 is a plan view of a portion of the machine of Figure 3 showing the region of transfer of blown containers from a stretch-blow-moulding die to a container receiving bin;

[00172] Figure 12 is a schematic block diagram of control components associated with control of the heating and transport of the preforms usable with any of the above described embodiments;

[00173] Figure 13 is a side view of a typical injection-moulded preform for stretch-blow-moulding of a polymer container according to prior art.

[00174] Figure 13A is a sectioned side view of a preform according to a preferred embodiment of the invention in which a central vertical plane passing through a central vertical axis of the preform lies in the plane of the paper,

[00175] Figure 14 is a side view of a mandrel for injection-moulding the preform of Figure 13A in which a central vertical plane passing through a central vertical axis of the mandrel lies in the plane of the paper;

[00176] Figure 15 is cross section along the vertical central axis of the mandrel of Figure 14 taken at the level of A-A;

[00177] Figure 16 is a cross section along the vertical central axis of the mandrel of Figure 3 taken at the level B-B;

[00178] Figure 17 is a side view of a container stretch-blow-moulded from the preform of Figure 2;

[00179] Figure 18 is an end view of the container of Figure 17;

[00180] Figure 19 is a sectioned side view of a further preferred embodiment of a preform according to the invention;

[00181] Figures 19A and 19B are selected cross sections of the preform of Figure 19;

[00182] Figure 20 is a sectioned side view of a further preferred embodiment of a preform according to the invention;

[00183] Figures 20A and 20B are selected cross sections of the preform of Figure 20;

[00184] Figure 21 is a sectioned side view of a further preferred embodiment of a preform according to the invention;

[00185] Figures 21A and 21B are selected cross sections of the preform of Figure 21;

[00186] Figure 22 is a sectioned side view of a further preferred embodiment of a preform according to the invention;

[00187] Figures 22A and 22B are selected cross sections of the preform of Figure 22;

[00188] Figure 23 is a sectioned side view of a further preferred embodiment of a preform according to the invention;

[00189] Figures 23A and 23B are selected cross sections of the preform of Figure 23;

[00190] Figure 24 is a schematic view of an injection moulding process for producing the preforms of Figures 13A and 19, 20 to 23;

[00191] Figure 25 is a container with integral handle as blow-moulded from the preform of Figure 13,

[00192] Figure 26 is a preform of reduced PET volume according to a preferred embodiment of the invention,

[00193] Figure 27 is a cross section view of the body of the preform of Figure 26 showing variations in wall thickness,

[00194] Figure 28 is a side view of a container stretch-blow-moulded from the preform of Figures 26 and 27,

[00195] Figure 29 is a further side view of a preform with integrally formed handle according for stretch-blow-moulding in the machine of the invention,

[00196] Figure 30 is a sectioned, schematic side view of an injection moulding press and injection moulding die for moulding the preforms for use in the continuous rotating stretch-blow-moulding machine of the invention, with the die opened prior to an injection moulding cycle,

[00197] Figure 31 is a front view of the face of the moving die section of the injection moulding die of Figure 30 at the end of an injection moulding cycle (with the heated fixed die section removed)

[00198] Figure 32 is a further view of a part of the injection moulding press showing extraction of moulded preforms by vacuum elements inserted into the opened die by a robot.

[00199] Figure 33 is a side view of a preferred embodiment of a preform and integrally attached handle according to the invention.

[00200] Figure 34 is an end view of the preform of figure 33.

[00201] Figure 35 is a view from above of the preform and handle of Figures 33 and 34.

[00202] Figure 36 is a sectioned side view of a further preferred embodiment of a preform according to the invention;

[00203] Figures 36A and 36B are selected cross sections of the preform of Figure 36;

[00204] Figure 37 is a sectioned side view of a further preferred embodiment of a preform according to the invention;

[00205] Figures 37A and 37B are selected cross sections of the preform of Figure 37;

[00206] Figure 38 is a perspective view of a container according to an embodiment of the invention having variable wall thickness as a function of radial angle in selected horizontal planes,

[00207] Figure 39 is a side view of the container of figure 38 defining the selected horizontal planes,

[00208] Figure 40 is a view from above of the container of Figure 38 defining angle references and graphing wall thickness through the selected planes XX,YY, ZZ.

[00209] Figure 41 is a schematic plan view of a container reorientation device located intermediate the stretch blow-moulding machine and a filling and capping machine.

[00210] Figure 42 is a side view of a preform with an integral handle attached at two locations arranged and manufactured according to further preferred embodiments.

[00211] Figure 43 is a side view of a container stretch blow-moulded from the preform of figure 42.

[00212] Figure 44 is a side view of a preform with an integral handle attached at a single point according to the invention.

[00213] Figure 45 is a side view of a container with a single connect integral handle for stretch blow-moulded from the preform of figure 44.

[00214] Figure 46 is a side section view of a further example of a preform with a handle attached at a single point with an alternative variable wall profile.

[00215] Figure 47 is a side section view of a further example of a preform with a handle attached at a single point with an alternative variable wall profile.

[00216] Figure 48 is a side view of a preform for stretch blow-moulding a container with an integral, double-connected handle.

[00217] Figure 49 is a side view of the preform of figure 1, distorted after passage through a preconditioning stage in a stretch blow-moulding machine.

[00218] Figure 50 is a front view of one half of a stretch blow-moulding die adapted to correct distortion of the preform of figure 49.

[00219] Figure 51 is a side view of a container with integral double-connected handle stretch blow-moulded from the preform of figure 49 in the die of figure 50.

[00220] Figure 52 is a side view of a preform for stretch blow-moulding a container with an integral, single-connected handle distorted after preheating;

[00221] Figure 53 is a side view of a container with integral single-connected handle stretch blow-moulded from the preform of figure 6 in the die of figure 52;

[00222] Figure 54 is a further side view of the container of figure 53

DESCRIPTION OF EMBODIMENTS

[00223] The following is a detailed description of a continuous stretch blow moulding system applied to specified integral handle PET preform and PET blown container structures stretch blown from the preforms.

[00224] The continuous stretch blow moulding system will be described first and then the specified applications will follow. In its simplest form the stretch blown moulding system may be a single stage moulding system. In an alternative form, it may be a one and a half stage system. In yet a further form, it may be a two-stage system.

[00225] The system stretch blows integral handle PET containers from integral handle PET preforms using a continuous process as will be described.

[00226] The system stretch blows integral handle PET containers from non-symmetric injection moulded preforms; the non-symmetric preforms including an integral handle extending from at least one junction point on a body of the preform; the body of the preform and the integral handle constituted from the same PET material.

[00227] In a first preferred form, a feature of the present continuous machine **10**, a preferred configuration of which is shown in Figure 3, is that motion through the machine of a non-symmetric injection moulded preform **12** as shown in Figure 1, from its initial intake to its emergence as a stretch blow-moulded container **14** (as shown in Figure 2), is continuous. As shown in Figure 1, the previously injection moulded polymer preform comprises a cylindrical elongate body **16** and neck **18**. An integral handle **20** extends from a first junction point **22** just below the neck **18** to a second junction point **24** on the body **16** of the preform.

[00228] Referring again to Figure 3, the continuous, non-incrementing process of the machine **10** includes the transfer of preforms from a loading or pick off position **26** to a preheating stage **28**, through the preheating stage and transfer to a stretch-blow moulding die **30** with subsequent removal of the blown container **14** from the die and removal from the machine. These stages will now be described in detail.

Entry of Preforms and Handle Orientation – First Preferred Embodiment

[00229] As shown in the preferred layout of the machine **10** in Figure 3 and referring also to Figures 4 and 5, the previously injection moulded preforms **12** (as shown in Figure 1) are fed, for example from a hopper (not shown but as well understood in the industry) to slide under gravity down inclined rails **32** while supported by their necks **18**. The inclined rails **32** comprise a pair of upper rails **32a** between which the preforms are suspended by their necks **18**, and a pair of lower rails **32b** which constrain the handles **20** of the preforms approximately in line with the long axis of the rails. For reasons that will become clear, it is essential however, that during the passage of preforms through the stages of the machine, the orientation of the integral handle **20** of the preform is controlled precisely.

[00230] Preforms **12** with a handle roughly oriented pass one by one through an escapement **34** to be captured by a continuously rotating feeder wheel **36** which carries the preform between the feeder wheel and a short rail **40**, in such a way that friction between the body **16** of the preform and the rail **40** induces rotation of the preform and its handle. The rotating handle collides with a stop **40a** under the rail **40** forcing each handle into a rearward orientation with respect to the direction of travel, to arrive at a pick off position **26.**

[00231] At the instance that a preform arrives at the pick of position **26**, a pair of opposing actuators (not shown) located under the pick off position **26**, simultaneously briefly close on, and then release, the preform handle **20** to fix its orientation relative the gripper **58** which, also at that instant engages with the neck **18** of the preform.

Entry of Preforms and Handle Orientation – Second Preferred Embodiment

[00232] In this second preferred embodiment, with reference now to Figure 4A, the injection moulded preforms **12** are again fed onto inclined rails **32a**, down which they slide under gravity supported by the flanges at the necks **18**. Again, as described for the first preferred embodiment above, the handles are loosely constrained between lower rails **32b**, with the handles either in a "leading", that is pointing in the direction of movement of the preforms as they progress down the incline, or "trailing", pointing rearwardly.

[00233] In this second preferred embodiment, an orientation mechanism **34A** is located at a point along the rails **32** approaching the lower end of the rails. As can be seen in Figure 4A, the mechanism includes two contra-rotating drive wheels **33** and **35**, arranged at opposite sides of the rails **32**, at a level coincident with the lowermost portion of the bodies of the preforms and below the lower rails **32b** and the lowermost point of the handles. The axes of the wheels are normal to the slope of the inclined rails. Note only the lower rails **32b** are shown in Figure 4A.

[00234] The drive wheels **33** and **35** are separated by a gap **37** which is somewhat narrower than the diameter of the body **16** of the preforms. Each of the wheels **33** and **35** is provided with one or two tyres **39** of a sufficiently soft polymer material to allow a preform body **16** to pass through the gap but providing a degree of grip on the body.

[00235] As shown in Figure 4A, drive wheel **33** rotates in an anticlockwise direction while drive wheel **35** rotates in a clockwise direction. The combination of these two rotations has the effect of drawing a preform through the gap **37**. The two drive wheels do not however rotate at the same rate, with, in the preferred arrangement shown in Figure 4A, drive wheel **35** rotating at a significantly lower rpm than that of guide wheel **33**. A preferred ratio of rotation of drive wheel **33** to drive wheel **35** is of the order of 2:1.

[00236] The effect of this differential in rate of rotation of the two drive wheels is that drive wheel **35** exerts a considerably greater grip on the body **16** of the preform so that it acts to rotate the preform in an anticlockwise direction as the preform passes through the gap **37** between the two drive wheels. By this means a handle **20** of a preform which is in a leading position as the preform enters the gap **37**, is rotated until it contacts the right hand lower rail **32b** (as seen from above in Figure 4A). To allow for this rotation of the handle a gap **40** is provide in the left hand lower rail.

[00237] It will be understood that the anticlockwise rotation induced by drive wheel **35** has no effect on those preforms entering the gap with their handles trailing, except to drive the trailing handle into contact with the right hand lower rail. Thus, all preforms downstream of the orientation mechanism **34A** approach the escapement **34** in the preferred orientation with the handles in the trailing position.

[00238] The escapement **34** controls the feeding of the handle oriented preforms to the feeder wheel **36** as described above, retaining the trailing orientation of the handles as induced by the mechanism **34A**. As for the first arrangement above, at the instance that a preform arrives at the pick of position **26**, a pair of opposing actuators (not shown) located under the pick off position **26**, simultaneously briefly close on, and then release, the preform handle **20** to fix its orientation relative the gripper **58** which, also at that instant engages with the neck **18** of the preform.

[00239] It will be understood that although the above description is specific to the rotation of the preform in an anticlockwise direction by the clockwise rotating drive wheel, orientation according to the principles of the mechanism may equally be achieved by reversing the differential rates of rotation of the two drive wheels and providing the gap in the lower guide rail on the opposite side to that illustrated in Figure 4A. In this alternative arrangement, it is then the anticlockwise rotating drive wheel which induces clockwise rotation to the body of a preform passing between the wheels, rotating a leading oriented handle until it contacts the left hand lower rail (as seen from above in Figure 4A), the gap allowing rotation of the handle then being provided in the right hand lower rail.
[00240] Precise orientation of the handle throughout the stages of the machine is critical to the process of preheating where the orientation must align with the alignment of heat shields, and for correctly placing the preform and the handle into the stretch-blow-moulding die.

Entry of Preforms and Handle Orientation – Third Preferred Embodiment
[00241] With reference now to Figures 4B to 4D, in this further preferred arrangement of a handle orientation mechanism 34b, injection moulded preforms **12** emerge one at a time from a bulk supply via, for example, a conveyor (not shown) to be deposited centrally onto a pair of contra-rotating, downward sloping rollers **11** and **13**. The rollers **11** and **13** are so spaced as to allow the body 16 and handle 20 of each preform to drop through the gap between them but retain the wider diameter of the projecting collar below the neck **18** of the preform. The rollers **11** and **13** are mounted above a pair of spaced apart guide rails **15** and **17** (as best seen in Figure 4D) similarly spaced as the gap between the rollers. As the bodies and the handles of the preforms drop through the gap between the rollers and that between the guide rails **15** and **17**, the handles **20** are constrained into approximate alignment between these rails, but at this stage handles may be "leading" or "trailing" relative to movement in the downward direction shown in Figures 4C and 4D. Since it is a requirement imposed by the design of the blow-moulding machine described below, that preform handles at entry of preforms into the feeder wheel **36** must be in the trailing position, those leading must be turned around.

[00242] At the downward ends of the rollers, the preforms drop to the level of main support rails **19** and **21**, so that preforms are now retained between these main support rails by their collars. A combination of gravity and pressure from following preforms forces each preform against the upward outer ends of side by side, contra-rotating auger screws **23** and **25** located on either side of a median vertical plane between the support rails. The flutes **27** of the auger screws are sized so as to capture between them the necks **18** of the preforms. The pitch of the auger screws is such as to separate preforms while being driven in the downward direction by the screws' rotation.

[00243] Generally coextensive with the length of one of the auger screws, (in the arrangement shown in the drawings, auger screw **25**), the main support rail **21** is provided at its underside with a friction strip 29 (as best seen in the enlargement inset of Figure 4D). This

friction strip **29** projects slightly into the gap between the main support rails **19** and **21** so that its inner edge engages with the body of a preform as it progresses between the augers. This friction contact urges rotation of the preform in an anticlockwise direction as seen from above.

[00244] Also, approximately coextensive with the length of the auger screw **25** is a gap in the guide rail **17**. Any rotation of an already trailing handle, will only force the handle into engagement with the opposite guide rail **15**, and remain trailing. But, as can be seen from the enlarged inset of Figure 4D, handles of preforms with handles leading at entry between the auger screws will gradually be rotated from the position where the handle is leading to it being in the trailing position, (being free to do so by the gap in guide rail **17**) until these handles also are arrested from further rotation by the opposite guide rail **15**. From here as can be seen from Figures 4C and 4D, the preforms, all with handles trailing, proceed down the main support rails **19** and **21** with the handles constrained between the now continuous guide rails **15** and **17** until they reach the final orientation operation at the feeder wheel **36**.

[00245] As well as spacing and rotating preforms as they pass between the auger screws **23** and **25**, the rotation rate of the auger screws is such as to deliver a preform to the feeder wheel **36** in synchronization with the rotation of that wheel. Furthermore, the rotation of the auger screws provides pressure to ensure preforms proceed down the main support rails.

Transfer to Preheating

[00246] Referring now to Figure 5 and Figure 6, a first rotating transfer system **42** is positioned adjacent the feeder wheel **36** with a continuously rotating carrier **44** of the first rotating transfer system **42** and the feeder wheel **36** contra-rotating one to the other.

[00247] The rotating carrier **44** of the first rotating transfer system **42** includes, in this embodiment, four opposing support arms **46** extending radially from a fixed centre of rotation **48** to rotate about a vertical axis **50**. Each end of the arms carries a first pick and place apparatus **52**. Each first pick and place apparatus **52** includes a linear guide **54**, a housing **56** which is rotatably mounted to the outer end of the support arm **46**, enabling rotation of the housing **56** about a vertical axis **51**. A two-fingered gripper **58** is mounted to a rotary actuator **60** supported by vertical plate **62** at an outer end of a free sliding element **64** of the linear guide **54**. The gripper fingers **66** are centred on a gripper effective vertical axis **68**, with the gripper able to be rotated about the horizontal axis **61** of the rotary actuator **60**.

[00248] A fixed horizontal cam plate **70** is mounted at a level below the rotating carrier **44** so that its centre is coincident with the vertical axis **50** of the rotating carrier. The perimeter edge **72** of the cam plate **70** forms an outer cam surface **74** and its upper surface **76** is provided with a cam channel **78** which is inboard of the perimeter edge **72** and the outer cam surface **74**.

[00249] The housing **56** of the linear guide **54** is provided with an outrigger arm **80** extending radially from the centre of rotation **82** of the linear guide **54**. The outer end of the outrigger arm **80** supports a first cam follower **84** locating in the cam channel **78**. The free sliding element **64**, adapted to reciprocating linear motion in a horizontal plane, is provided with a second cam follower **86** with the free sliding element **64** biased by springs **88** to maintain contact between the second cam follower **86** and the outer cam surface **74**.

[00250] The cam channel **78** and outer cam surface **74** are arranged so that as a first pick and place apparatus **52** rotates past the preform pick off position **26**, the rotation of the rotating carrier **44**, combined with the loci of the first and second cam followers **84,86** causes the gripper **58** to be both reciprocatingly extended and retracted, and rotated relative the arm **46**. The gripper motion is such that at the approach to the preform pick off position **26**, the free sliding element **64** and thus the gripper **58** is extended followed by rotation of the linear guide **54** and gripper **58** in retrograde or negative direction relative to the direction of rotation of the rotating carrier **44**.

[00251] At the instant a preform **12** arrives at the pick off position **26** after its approximate orientation, so that the handle **20** of the preform is trailing but not yet fixed, the extending movement of the gripper **58** through the first cam follower **84** against the outer cam surface **74**, brings the gripper effective axis **68** into coincidence with the central axis of the preform. At this instance also, a pair of opposing actuators located under the pick off position **26** simultaneously briefly close on, and then release, the preform handle **20** to fix its orientation relative the gripper **58** which, also at that instant engages with the neck **18** of the preform. The gripper **58** is then rotated positively to carry the preform **12** clear of the supporting short rail **40** and away from the pick off position **26**.

[00252] This combination of reciprocating rotation and extension and retraction of the gripper **58** compensates for the divergence of the loci of the supporting tooth formation **38** of the feeder wheel **36** and the rotating carrier **44** as they contra rotate one relative the other. It is by the means of the reciprocating rotation and retraction movements of the gripper through a combination of a rotating linear guide and the two cam loci that a smooth continuous transfer of preforms is possible between two rotating elements; that of the feeder wheel **36** and the rotating carrier **44**.

Loading Into Mandrel Stage

[00253] With reference now to Figure 7, rotation of the rotating carrier **44** brings a preform **12** retained in a gripper 58 to the preheating stage **28** as was shown in Figure 3 of the machine **10**. Because the preheating of the preforms is conducted with the preforms inverted from their initial position at the pick off position **26**, that is, with the neck **18** upward, the rotary actuator **60** at the end of the free sliding element **64** rotates the grippers **58** and the preforms through 180degree during their transit between pick off position **26** and the transfer to a preheating transport system **90**. The effect of this rotation is that the handle **20** of the preform is now "leading" with respect to the direction of rotation of the rotating carrier **44**, instead of trailing as it was at the pick off position **26** as could be seen in Figure 5.

[00254] The preheating transport system **90** is also in continuous movement and comprises a loop rail system **92** with proximate and distal rotating guide wheels **94** and **96** respectively at either end of the loop. A plurality of preform supporting mandrels **98** are adapted to move around the loop rail system **92**, driven into motion around the straight sections of the loop by a drive chain (not shown) to which they are fixed and around the guide wheels **94,96** by nesting in niches **103** of the guide wheels. As well as travelling around the loop rail system **92**, the mandrels **98** are continuously rotated about their vertical axes.

[00255] Preheating of the preform **12** is required for the body **16** of the preform, that is for that portion of the preform which will be subjected to stretching and blow-moulding, to sufficiently soften the polymer. But the handle **20** and the neck **18** which retain their as injection moulded form in the blown container shown in Figure 3, must be protected from

excessive heat as the preform moves through the preheating stage. For this reason, as shown in Figure 8, a preform supporting mandrel **98** is provided with a heat shield **100** comprising a channel **102** rising from a cylindrical collar **104** in which the handle **20** is protected while the neck **18** is protected by its insertion into the cylindrical collar **104** of the mandrel.

[00256] It may be noted that the patterns of the outer cam surface **74** and that of the cam channel **78** of the first rotating transfer system **42** as shown in Figure 5, near the pick off position **26** differ from those at the approach to, and following the preform transfer to preheating position **106**. This reflects the difference in movements required of a gripper **58** as it steers the preform into the position in which the vertical axis of the preform becomes aligned with that of the cylindrical collar **104** of the mandrel **98** and the handle **20** is aligned with the heat shield channel **102**. At the instant these axes are aligned and the handle **20** of the preform is aligned between the side elements of the channel **102**, a cylindrical plunger **108** within the collar **104** rises into the neck **18**, then lowers to bring the neck to an inserted position within the collar. These movements of course take place while the first rotating transfer system **42** and the proximate guide wheel **94** are in continuous contrarotation. This complex movement is again made possible by the combination of the rotation of the arm **46** and the rotation and linear movements of the free sliding element **64**, and thus of the gripper fingers **66** of the first pick and place apparatus **52**.

[00257] Thus the transfer of a preform from the gripper of the first transfer system **42** to a preform supporting mandrel **98** is achieved in one fluid motion as the vertical axis of the preform is brought into alignment with that of the mandrel and the oriented handle of the preform slides into the heat shield, while accommodating each of the rotations of the loop rail, the mandrel and the transfer system as well as the movements of the gripper.

Preheating of Preforms

[00258] As best seen in Figures 3 and 8, banks **110** of heating elements **109** are positioned along each of the straight sections of the loop rail system **92**. Graded hot air **111** is drawn across the path of the preforms **12** by extractor fans **113**. To prevent excessive heat build-up of the cylindrical collar **104** and the neck **18** of the preform in the collar, a cooling air stream **115** is directed at the collars.

[00259] As a mandrel **98** and preform **12** are rotated away from the transfer-to-preheating position **106** by the proximate rotating guide wheel **94**, the mandrels supported in the chain of the preheating transport system **90** travel along the first straight section **112**, around the distal rotating guide wheel **96** and back along the second straight section **114** to arrive at a transfer-from-mandrel position **116**. While traversing these straight sections, the mandrels are rotated about their vertical axes by a gear **105** of the mandrel engaging with chain **107** to evenly expose the bodies of the preforms to heat from the banks **110** of heating elements **109**. The heating elements **109** are each arranged as a series of infra-red heating elements which are individually adjustable as to their proximity to the passing preforms.

[00260] It will be understood that the orientation of each mandrel **98** at both the transfer to preheating position **106** and at the transfer from mandrel position **116** is critical to allow the respective first and second transfer systems to insert and extract a preform handle from the channel of the mandrel's heat shield. These heat shield orientations with respect to the periphery of the proximate guide wheel **94** are not the same at these two positions so that the orientation of the mandrel and its heat shield need to be changed from that demanded at the

handle extraction position to that required at the handle insertion position.

[00261] To this end, each mandrel is provided with a guide carriage **98a** fixed to the mandrel. As a mandrel approaches the transfer-from-mandrel position **116**, cam followers **98b** and **98c** engage with guide channels to rotate the mandrel into the required orientation. During transit about the periphery of proximate guide wheel **94**, the cam followers **98b** and **98c** follow cam channels of a cam plate above the proximate guide wheel to bring the orientation of the heat shield to that required at the transfer-to-preheating position **106**.

Transfer to Mould

[00262] With reference now to Figure 9, a second rotating transfer system **118** operates to transfer preforms **12** from the preheating transport system **90** to a stretch blow moulding die assembly **120.** The stretch blow moulding die assembly **120** comprises of four stretch blow moulding dies 3**0**, two of which can be seen in the truncated view of the machine in Figure 9. In the present embodiment, four radially disposed stretch blow moulding dies **30** rotate continuously about a common centre **122**.

[00263] The second rotating transfer system **118** is of similar configuration to that of the first rotating transfer system **42** described above. That is, it includes a cam plate **124**, also provided with an inboard cam channel **126** and an outer cam surface **128** around its periphery.

[00264] In this instance, second rotating transfer system **118** includes two, rather than four, continuously rotating opposing radial arms **130**, each of which carries a second pick and place apparatus **132**. Again, similar to the first pick and place apparatuses **52** of the first rotating transfer system **42** above, each includes a linear guide rotatably mounted to the respective outer end of the radial arm **130**, with the free sliding element of the linear guide supporting a rotary actuator which, in turn supports a gripper. In this arrangement also, a first cam follower of an outrigger arm attached to the housing of the linear guide, locates in the inboard cam channel **126**, while a second cam follower of the free sliding element of the linear guide remains in contact with the outer cam surface **128** by means of a spring.

[00265] Preforms still retained in preform supporting mandrels **98** arrive back at the rotating proximate guide wheel **94** of the preheating system and approach the transfer-from-mandrel position **116**, and are rotated into the required orientation of the heat shield as explained above. The cylindrical plunger **108** of a mandrel **98** approaching the transfer-from-mandrel position **116**, lifts the preform so that the neck is clear of the cylindrical collar **104** to allow the gripper of the second rotating transfer system **118** to engage the preform by the exposed neck **18**. Again, it is the motion of the gripper induced by the combination of rotation of the radial arm **130**, the rotation of the linear guide and linear movements of the free sliding element supporting the gripper as controlled by the cam channel **126** and outer cam surface **128**, which allows the preform and its handle to be smoothly removed from the preheating transport system **90**.

[00266] As one rotating radial arm **130** of the second rotating transfer system **118** approaches and removes a preform from the preheating transport system **90**, the opposite radial arm approaches the die loading position **134**. During its rotation from the transfer-from-mandrel position **116** to the die loading position **134**, the rotary actuator of the second pick and place apparatus **132** rotates about its horizontal axis to change the preform from its inverted position held during the preheating stage, back into an upright position. (It should be

noted that Figure 9 shows both a rotating arm **130** and a stretch blow moulding die **30** approaching the die loading position **134**)

[00267] Stretch blow moulding dies of the die assembly **120**, are in the form of two die halves **136**, one of which is shown in Figure 10. Die halves **136** are hinged together about a vertical axis **142** in the manner of a bivalve, and with the hinge supported from a central structure **146** of the die assembly **130** in a typical arrangement for radial stretch-blow-moulding machines. The face surface **138** of the die half shown in Figure 10 has been shaded to highlight the die cavity **148** for the body **16** and integral handle **20** of the preform. As is common in the stretch-blow-moulding of containers, the neck **18**, which remains unaltered in the stretch-blow-moulding process, projects out of the die when closed.

[00268] Referring again now to Figure 9, as stretch-blow-moulding dies **30** approach the loading position **134** the die halves open symmetrically about a bisecting radial line **152** passing through the centre of rotation **122** and the vertical axis **142** of the die hinge **144**, in preparation for receiving a preform. It may noted from Figures 3 and 9, that the rotation centres of the second rotating transfer system **118**, the proximate rotating guide wheel **94** of the preheating stage and that of the stretch-blow-moulding die assembly **120**, lie along a straight line **154**.

[00269] As an opened die **30** approaches the die loading position **134** lying on the straight line **154**, a radial arm **130** with a preform retained in the gripper of the second pick and place apparatus **132** also approaches the loading position. As the bisecting radial line **152** of the die halves **136** becomes coincident with the straight line **154**, the movements of the second pick and place apparatus **132** has brought the gripper effective vertical axis and thus the vertical axis of the preform into coincidence with the axis **156** of the die (as defined by the centre of the preform body when held in the die) and with the handle oriented to lie in the vertical plane defined by the straight line **154**. While the die halves close and the paths of the die **30** and the end of the rotating arm **130** begin to diverge, the rotation and extension of the gripper, still holding the neck **18** of the preform, ensures the orientation of the handle is maintained in that vertical plane defined by the bisecting line of the die halves until closure is complete. The gripper then disengages from the preform neck.

[00270] It can be seen from Figure 10, that the curved section of the handle **20** of the preform is nested in a constricting cavity **150** of the die which ensures that the handle is not distorted, nor the region between the junction points **22,24** stretched. The underside of the straight section of the handle forms a surface which, in effect, determines the shape of the container under the handle.

[00271] With the die halves **136** closed, stretch-blow-moulding of the container proceeds and the die **30** loaded at the die loading position **134** rotates towards the die unloading position **158** as shown in Figure 11.

Container Unloading

[00272] A third rotating transfer system **160** is located adjacent the stretch-blow-moulding die assembly **120**, and is configured in similar manner to that of the first and second rotating transfer systems **42,132** described above. As for the second rotating transfer system **132**, the third rotating transfer system **160** includes opposing radial arms **162** at the ends of each of which is a third pick and place assembly **164**. It does not however include a rotary actuator

since the container which emerges from the die remains in an upright position through the discharge process.

[00273] As for the first and second rotating transfer systems, movements of a gripper **166** is controlled by a combination of the rotation of the opposing radial arms **160**, the linear movement of the free element of the linear guide and the two cam loci.

[00274] As the stretch-blow-moulding die **30**, now containing a finished container **14**, nears the die unloading position **158** lying on the line **168** joining the centres of rotation of the stretch-blow-moulding die assembly **120** and of the opposing radial arms **160** of the third transfer system, the gripper of the pick and place is maneuvered into position to grasp the neck of the container. As the die reaches the die unloading position, the die halves open and the gripper extracts the blown container **14** from the die **30**.

[00275] The third rotating transfer system **160** continuous to rotate, taking the container **14** held by the gripper **166** into a discharge channel **172**, with the base of the container passing over a guide rail **170**. Guide rail **170** transitions from concentricity with the third rotating transfer system to concentricity with a rotating two-tiered outfeed wheel **172.** As the container **14**, now in the discharge channel **172**, reaches a release position **174** lying on the line **176** joining the centres of rotation of the third rotating transfer system **160** and that of the outfeed wheel **172**, the gripper **166** releases the neck and retracts. At the same time a scalloped indentation **172a** of the rotating outfeed wheel captures the body of the container feeding it into a discharge channel **178**. As containers follow the path of the gripper **166** and then a path determined by the outfeed wheel **172**, the base of the container receives cooling air from orifices **182** in guide rail **170,** backpressure from accumulating containers in the discharge channel **172** force containers to drop into a container receiving bin **180**, or in the case of containers being transferred to a filling and capping machine onto a conveyor **178** as shown in figure 38.

Control of the Machine

[00276] The operation of the machine **10** is under the control a programmable logic controller. As well as ensuring that all rotation drive servo motors operate synchronously, the controller provides for fully adjustability of the parameters of the preheating elements and of the parameters of the stretch-blow-moulding dies. This includes setting differential temperature gradients allowing for a gradually increasing exposure to heat as preforms progress around the preheating transport system, and automatic adjustment of heating element temperatures for changing ambient temperatures.

[00277] Control of the preheating is particularly critical in the present system because of the unique characteristics of the preform dictated by the integral handle of the preform. The preheating is thus designed to allow for lateral flow of material in the area between the two junction points of the handle while limiting longitudinal flow and extension during the stretching phase of the stretch-blow-moulding process. Instead, the manner in which heat is applied to the preform ensures that the bulk of polymer which forms the outer shell of the container of Figure 2, is produced from that region of the preform below the lower junction point of the handle.

[00278] Figure 12 is a schematic block diagram of control components associated with control of the heating and transport of the preforms usable with any of the above described

embodiments.

[00279] As best seen in the inset of figure 12, banks **110** of heating elements **109** are positioned along each of the straight sections of the loop rail system **92**. Graded hot air **111** is drawn across the path of the preforms **12** by extractor fans **113**. To prevent excessive heat build up of the cylindrical collar **104** and the neck **18** of the preform in the collar, a cooling air stream **115** is directed at the collars.

[00280] In a preferred form each bank **110** comprises a module **201**. The modules **201** are arranged sequentially around the conveyer **202** as illustrated in figure 12.

[00281] In a preferred form a processor **203** in conjunction with memory **204** executes a program for control of the heating elements **109** of the modules **201**.

[00282] In a particular preferred form each element **109** of each module **201** is controlled individually by the processor **203**.

[00283] In an alternative preferred form the elements **109** are controlled as a group based on height – so the top most elements **109** of the modules **201** are controlled to a predetermined temperature together whilst the next down in height elements **109B** are also controlled together to a predetermined temperature – and so on down to elements **109G** at the lowest level.

[00284] In addition the processor **203** controls the speed of rotation of motor **205** in order to control the continuous speed of the preforms **16**.

[00285] A temperature sensor **206**, in one form an infrared temperature sensor provides environment temperature sensing which is utilised by processor **203** to modulate the degree of heating of all elements **109** by a difference factor delta (Δ).

[00286] This allows for a global control of the system temperature in response to variations in ambient temperature.

[00287] As noted above, the stretch-blow-moulding machine is especially developed for, and adapted to, the feeding and transportation of a non-symmetrical preform with integral handle and, ultimately the stretch-blow-moulding of that preform into a container with an integral handle. The preform according to the invention may take a number of different forms described below, although common to all are the neck portion **18** and the integral handle **20** as shown in Figure 1.

[00288] The preforms now to be described differ primarily in respect of the configuration of their internal surfaces, offering benefits of improved distribution of polymer material to the walls of the blown container as well as significant improvement in economy of manufacture due to reductions in the volume of polymer required.

First Preferred Non-Symmetrical Preform Embodiment

[00289] In a first preferred embodiment a preform **310** according to the invention as shown in Figure 13A includes a finished neck portion **312** and a tubular hollow body portion **314** extending from below the neck portion. Similar to preforms of the prior art, the outer surfaces of the body portion **314** are defined by diameters centred on a central vertical axis **316**, so that the body portion **314** approximates a cylinder but with a decrease in diameters

from the neck portion **312** to the closed end **318** of the preform.

[00290] The internal surfaces of the preform **310** include surfaces of the hollow body portion **314** which are not concentric with the outer surfaces. Preferably, as shown in Figures 15 and 16, cross sections of the internal surfaces of the preform **310** are circular and concentric in the neck portion **312** of the preform as indicated by the cross-section A-A, but below the neck portion are of ovoid form as indicated by section B-B. All sections are however centred on the central longitudinal axis **316** of the body of the preform.

[00291] Referring now to Figure 14, in a preferred arrangement, the mandrel **322** around which the preform **310** is injection moulded, comprises an upper region **324** of circular cross sections adapted to position and retain the mandrel in its correct position in an injection moulding cavity. A first preform-defining portion **326** of the mandrel extends from this upper region **324** to a depth equal to that of the neck portion **312** and is of circular cross section A-A as shown in Figure 4 to form the concentric walls of the neck portion. The ovoid portion **328** of the mandrel depends from the first portion **326**, extending to the tip **330** of the mandrel.

[00292] Given the ovoid shape of the cross sections of the ovoid portion **328**, there is a short transition portion of the mandrel immediately below portion **326** forming the internal form of the neck portion, which transitions from the circular cross section A-A of portion **326** to the ovoid sections B-B. This transition thus takes the form an asymmetrical frustum of a cone; an upper end of which has a diameter equal to that of a lower end of the first portion **326** with the lower end of the transition portion conforming in cross section to the upper end of the ovoid cross section B-B of the remaining length of the preform.

[00293] It can be seen from Figure 13A, that both the outer surfaces of the body portion **314** of the preform and the ovoid portion of the inside surfaces as defined by the mandrel **322**, are tapering; that is, the diameters defining the external surface of the preform are decreasing from below the neck portion **312** to the bottom **318**, while similarly, the major axis **344** and the minor axis **342** of the cross sections of the ovoid portion **328** also decrease accordingly.

[00294] Referring still to Figure 13A, the preform **310** of the invention further includes, as noted above, an integral handle **334** which forms a loop of material extending vertically from an upper junction **336** below the neck portion **312** to a lower junction **338** with the outer surface of the preform. The handle **334** is centred on and defines a central vertical plane **340** (lying in the plane of the paper) which contains the central longitudinal axis **316** of the preform.

[00295] The mandrel **322**, and thus the internal surfaces of the ovoid portion **328**, are so oriented relative the handle **334**, that major axis **344** of the ovoid cross section B-B lies in the central vertical plane **340**.

[00296] It can thus be seen from Figure 16 and cross section B-B that the wall thicknesses of the preform **310** in that portion **328** of the preform in which the inner surfaces are defined by the ovoid cross section, varies from a maximum at opposite ends of the minor axes **342** of the ovoid cross section to minimum thicknesses at outer ends of the major axis **340**. Preferably, the ratio of maximum wall thickness to minimum wall thickness of the ovoid

portion lies in the range of 2:1 and 2.2:1.

[00297] The distribution of polymer in the preform according to the invention, afforded by the non-symmetry of the ovoid portion, allows polymer walls of the preform in the region of maximum thickness to be biased predominantly towards the longer side walls **346** of a rectangular cross section blown container **348**, while the polymer walls of the preform from the region of minimum thickness is predominantly distributed towards the shorter side walls **350** of the blown container such as shown in Figures 17 and 18. It can be seen from Figures 17 and 18 that the longer side walls **346** lie on either side of the central vertical plane **340** and thus the handle **334** so that the alignment of the major axis **344** with the vertical plane **340** ensures that the polymer from regions of maximum wall thickness are directed to those longer side walls. In preferred forms the preform of the first embodiment is produced by an injection moulding process as described earlier in this specification. In preferred forms the preform thus produced is reheated and blown on a continuously rotating, non-symmetric preform feed, stretch-blow-moulding machine as described earlier in this specification.

Second Preferred Non-Symmetrical Preform Embodiment

[00298] With reference now to Figure 19, in this preferred embodiment, the exterior surface **410** of the preform **400** of this embodiment, is of substantially cylindrical form. As for the first embodiment above, it too includes an integrally injection moulded handle **434**. In this embodiment, the internal surfaces **414** of the preform are consistently circular in section as shown in the two sample cross sections Figure 17A and Figure 17B. However, again as is clear from the two cross sections and the sectioned side view of Figure 17, there is a tapering of the internal surface **414** so that the wall sections, though concentric to the external surface, increase from a minimum thickness at the neck portion **412** of the preform to a maximum proximate its lower end **418**. In preferred forms the preform of the second embodiment is produced by an injection moulding process as described earlier in this specification. In preferred forms the preform thus produced is reheated and blown on a continuously rotating, non-symmetric preform feed, stretch-blow-moulding machine as described earlier in this specification.

Third Preferred Non-Symmetrical Preform Embodiment

[00299] In this further preferred embodiment of the invention, a preform **500** as shown in Figure 20, is formed to significantly reduce the volume of material required to produce the containers shown in Figures 17 and 18. As in the embodiments above, the preform **500** includes an injection moulded integral handle **534**. Although in this embodiment, the neck portion **512** is identical in its exterior and internal forms to that of the earlier embodiments, there is a substantial reduction in the diameter of the substantially cylindrical portion of the body of the preform below the neck portion.

[00300] In this embodiment also, as in the second preferred embodiment above, the internal surfaces of the preform are consistently circular in section as shown in the two sample cross sections A and B of Figures 20A and 20B, but taper with the wall sections increasing from the minimum thickness obtaining in the neck portion and through the transition in diameters below the neck portion, to a maximum wall thickness proximate the lower end **518** of the preform.

[00301] As a further means of reducing the volume of material in the preform of this embodiment, the outer surface **510** below the neck portion **512**, also tapers towards the lower end **518.** In preferred forms the preform of the third embodiment is produced by an injection moulding process as described earlier in this specification. In preferred forms the preform thus produced is reheated and blown on a continuously rotating, non-symmetric preform feed, stretch-blow-moulding machine as described earlier in this specification.

Fourth Preferred Non-Symmetrical Preform Embodiment

[00302] With reference now to Figure 21, this preferred embodiment of a preform **600** according to the invention, shares a number of characteristics with that of the first and second preferred embodiments above. It has, (as have all the preform embodiments of the present invention), an integral handle **634** as previously described, and, as in the first preferred embodiment above, the internal surfaces **614** of the preform are not consistently of circular section throughout the length of the preform. However, the external surfaces **610** of the perform are substantially cylindrical in form as in the second preferred embodiment.

[00303] Thus, although the external surfaces **610** are defined by circular cross sections, the internal surface **614** varies from circular in cross section from the neck portion **612** down to section A-A in Figure 21A, to then transition to an ovoid section B-B as shown in Figure 21B, approaching the lower end **618**.

[00304] A feature of this particular embodiment is that the wall thickness of the ovoid portion of the internal surface **614** of the perform at the ends of the major axes remains constant with the wall thicknesses of the concentric cross sections from section A-A and upwards, while there is a thickening of the walls increasing to maximum at the minor axis of the ovoid cross section. In preferred forms the preform of the fourth embodiment is produced by an injection moulding process as described earlier in this specification. In preferred forms the preform thus produced is reheated and blown on a continuously rotating, non-symmetric preform feed, stretch-blow-moulding machine as described earlier in this specification.

Fifth Preferred Non-Symmetrical Preform Embodiment

[00305] The preform of this embodiment of a preform **700** shown in Figure 22 is similar to that of the fourth preferred embodiment above, but here, as shown in the cross section views A-A and B-B of Figures 22A and 22b, the wall thickness at the outer ends of the major axes of the ovoid cross section portion of the preform is not maintained equal with the wall thickness of at and below the neck portion **712**. Rather the wall thickness gradually increases from below the neck portion towards the lower end **718** of the preform.

[00306] It may be noted at this point, that in those forms of the perform as in this embodiment and that of the first preferred embodiment above, shaping the internal surface in these non- concentric forms of outer and inner surfaces, introduces considerable issues for the injection –moulding of the preforms.

[00307] As shown in Figure 24, preforms, including those of the present invention, are typically injection moulded in multi-cavity dies **800** in which the cavities **820** in the die conform to the outer shape of the preform, including in the present cases, the shape of the integral handle. In preforms with concentric wall thicknesses, that is, with circular cross sections, the mandrels **840** for forming the internal surfaces will also be of circular cross sections. Thus, the only requirement for positioning such a mandrel relative the injection-

moulding cavity is its concentricity with the neck portion of the cavity.

[00308] A mandrel for producing an internal surface of a preform which is wholly or partially non-circular in section may firstly require, a considerably more complex machining operation and, secondly it must be specifically oriented in the injection-moulding cavity.

[00309] Mandrels for preforms with non-circular cross sections must be positioned within the cavities of an injection-moulding die **820**, one half of which is shown in Figure 24 so that the major axes of the ovoid portion are aligned relative to a vertical central plane of the cavities. For preforms according to the present invention with integral handles, that vertical plane is the plane on which the handle of the preform is centred as set out above (in effect the face **842** of the die half).

[00310] To be effective in biasing polymer material flow from different wall thickness areas of the preform towards designated regions of the blown container, the orientation of the preform must be maintained in the cavity of the stretch-blow-moulding machine. That is, the vertical plane of the preform must coincide with a defined vertical plane of the container. In the present invention the vertical plane of the preform is defined by the integral handle and is made coincident in the stretch-blow-moulding cavity with the central vertical plane of the blown container which again is central to the integral handle of the container.

[00311] In a moulding cycle, the die halves are brought together to close the die and the array of mandrels **840** driven into the cavities **820.** The injection nozzle **848** is then advanced into the injection pocket **844** and molten polymer forced through the runner system **846** to fill the spaces between the external surfaces of the cavities **820** and the mandrels **840** to produce the preforms.

[00312] Although the above description has focused in some embodiments on use of ovoid or offset cross sections to vary the wall thicknesses of at least a portion of a preform at any given cross section of that portion, it will be understood that such variation can be achieved with other non- concentric shaping of the mandrel. Again, although the ovoid cross sections described for the preferred embodiment are centred on the vertical axis of the preform, other material distribution effects may be achieved by an asymmetric positioning of these cross section. In preferred forms the preform of the fifth embodiment is produced by an injection moulding process as described earlier in this specification. In preferred forms the preform thus produced is reheated and blown on a continuously rotating, non-symmetric preform feed, stretch-blow-moulding machine as described earlier in this specification.

Sixth Preferred Non-Symmetrical Preform Embodiment

[00313] This further preferred embodiment of a preform according to the invention and shown in Figure 23, the preform **900** is provided with a wall thickness **911** in the region between the junction points **936** and **938** of the integrally injection-moulded handle **934** specifically to optimise control of the material in this region in the stretch-blow-moulding stage of producing a container from the preform.

[00314] In this embodiment, the external surface **910** of the preform is again substantially cylindrical. The internal surface **914** of the preform is likewise formed of circular cross sections, but as can be seen in both the side sectioned view of Figure 23A and cross section AA of Figure 23A, the centres of a portion of the cross sections (typified by section A-A) do not lie on the central axis **930** of the body of the preform, but are offset towards the handle

934.

[00315] The effect is to "thin" the wall thickness in the region between the junction points **936** and **938** of the handle. This is possible and desirable, because firstly there is a lesser volume of material required to form the container since there is no longitudinal stretching of this region and, secondly the thinning provides a significant cost saving in material.

[00316] It will be understood that all the above embodiments of the preform seek to optimise both the distribution of the polymer material of the preform into the blown container and do so by reducing the weight and thus the volume of material for reasons of economy of production. In preferred forms the preform of the sixth embodiment is produced by an injection moulding process as described earlier in this specification. In preferred forms the preform thus produced is reheated and blown on a continuously rotating, non-symmetric preform feed, stretch-blow-moulding machine as described earlier in this specification.

Seventh Preferred Non-Symmetrical Preform Embodiment

[00317] With reference to Figure 26 and 27, a preform **1000** for stretch-blow-moulding the container **1040** shown in Figure 28, is comprised of a neck portion **1012**, a collar **1014** and a body **1016** extending from below the collar. As in the preform according to prior art shown in Figure 1, the preform **1000** includes an integral handle **1018** joined to the body **1016** at first junction position **1020** just below the collar **1014** and a second junction position **1022** along the length of the body.

[00318] The first cylindrical portion **1024** of the body extending below the collar **1014**, is substantially of constant diameter, and in the region immediately below the collar, the diameter is substantially that of the finished container as can be seen in Figure 28.

[00319] But it can be seen firstly from a comparison between the preform **1000** according to the present invention, and the preform of the prior art, that there is a significant reduction in diameter of the body **1016** below the first cylindrical portion **1024**.

[00320] Furthermore, it is clear that this second portion **1026** of the body, between the reduction in diameter and the tangent line **1028** with the bottom portion **1030**, is not cylindrical but forms a portion of a narrow cone, with the base diameter **1030** of the cone, that is its largest diameter, significantly smaller than the diameter of the first cylindrical portion **1024**. Thus, this large reduction in diameter and the tapering provide a first significant reduction in the volume of PET contained in the preform of the invention.

[00321] Turning now to the cross-section view of Figure 27, the walls of the body **1016** of the preform **1000**, vary considerably in thickness. While the wall thickness of the neck portion **1012** and the first portion **1024** below the collar **1014** are substantially of a constant thickness, that of the second portion **1026** varies from a relatively thin wall section at the base diameter **1030**, to a maximum thickness proximate the tangent line **1028**.

[00322] The wall thickness of the bottom portion **1032** is further varied, being reduced from the maximum thickness at the tangent line **1028** to a minimum at the base of the bottom portion.

[00323] This thinning of the wall thickness in the region below the maximum diameter **1030** of the second portion **1026**, augments the reduction in material volume provided by the diameter reduction and the form of the second portion **1026**.

[00324] As well as providing savings in material volume, these variation in wall thicknesses are designed to evenly distribute the volume of PET material to various areas of the walls of the stretch-blow-moulded container **1040** shown in Figure 28, to an average thickness of approximately 0.5mm. In preferred forms the preform of the seventh embodiment is produced by an injection moulding process as described earlier in this specification. In preferred forms the preform thus produced is reheated and blown on a continuously rotating, non-symmetric preform feed, stretch-blow-moulding machine as described earlier in this specification.

Eighth Preferred Non-Symmetrical Preform Embodiment

[00325] With reference to figures 33, 34 and 35 there is illustrated a preform having an integral handle with a flared portion thereby to impart an ergonomic aspect to the lifting of containers blown from the preform.

[00326] Turning now to Figure 33, in a preferred form of the preform, a preform 2100 includes a neck 2102, a body portion 2103 and a handle 2113. The neck 2102 has a threaded portion 2104 and a locating ring 2105. The preform is injection moulded from PET material in accordance with the teaching elsewhere in this specification. The handle in its configuration as injection moulded in its preform state, remains unaltered by the stretch blow-moulding process forming the resulting container from the continuous blow moulding process described elsewhere in this specification.

[00327] In order to produce the container, the preform 2100 shown in Figures 33 to 35, is fed into a blow moulding machine such for example as the machine 10 shown schematically in Figure 3, and blow moulded according to bi-axial orientation blow moulding techniques. During this process the neck 2102 is held in a mandrel 322, as shown in Figures 14 of a transport system of the machine 10 in such a way as to prevent its expansion in the stretch blow-moulding die 30.

[00328] The loop of orientable material forming the handle 2113 has a generally uniform cross section from proximate the lower connection region 2116 to a gradually widening cross section 2124 approaching the upper connection region 2115 with the cross section reaching and maintaining a maximum width proximate the upper connection region 2115 as can be seen in Figures 34 and 35.

[00329] With reference again to Figure 33, integrally moulded first, second and third strengthening elements 2135, 2136 and 2137 are provided respectively at each of the upper connection region 2115, the lower connection region 2116 and at the junction between the straight section 2118 and the arcuate section 2120 of the handle 2113.

[00330] The first strengthening element 2135 at the upper connection region 2115 comprises a curved strengthening element conforming generally in width and in cross section to the width and cross section of the widened portion 2124 of the handle proximate the upper connection region. The curved strengthening element extends from a first separate connection region 2140 on the body portion 2103 of the preform (and on the blown container) below the upper connection region 2115 and merges with the loop of orientable material proximate a first end 2141 of the maximum width of the handle.

[00331] The second strengthening element 2136 at the lower connection region 2116 of the handle, comprises a straight strengthening element conforming generally in width and

cross section with the width and cross section of the straight section 2118. The straight strengthening element extends from a second separate connection region 2142 above the lower connection region 2116 of the straight section of the handle, to merge with the straight section of the handle proximate the lower connection region.

[00332] The third strengthening element 2137 at the junction of the straight section 2118 and the arcuate section 2120 of the handle, comprises a further curved strengthening element conforming generally in width and cross section with the width and cross section of the handle of both the straight section 2118 and the arcuate section 2120 adjacent the junction. Respective outer ends of this further curved element merge with each of the straight 2118 and arcuate 2120 sections.

[00333] It should be noted that, in this instance, the width of the first strengthening element 2135 is the same as that of the maximum width of the widened part 2124 of the handle proximate the upper connection region 2115. It is this increased width of the first strengthening element 2135 which provides for a larger area for distributing the load of a container over the index finger of a hand (not shown) lifting the container, while the curvature of the first strengthening element is selected to fit comfortably on the average index finger of a human hand.

[00334] Preferably, each strengthening element 2135, 2136 and 2137 includes a web of orientable material within boundaries formed respectively between the body portion 2112 of the preform and the first and second strengthening elements 2135 and 2136, and between the third strengthening element 2137 and the straight and arcuate sections 2118 and 2120. Each web of orientable material is aligned with and extends equally in both directions from the central line 2132 of handle. In preferred forms the preform of the eighth embodiment is produced by an injection moulding process as described earlier in this specification. In preferred forms the preform thus produced is reheated and blown on a continuously rotating, non-symmetric preform feed, stretch-blow-moulding machine as described earlier in this specification.

Ninth Preferred Non-Symmetrical Preform Embodiment

[00335] With reference to figure 36 there is illustrated a ninth embodiment of the preform showing alternative cross section arrangements for the purpose of reducing volume of the preform. In this instance like components are numbered as for the fourth embodiment with reference to figure 21. In this instance the cross section wall profile as shown in section AA and section BB is rotated 90 degrees as compared with the wall profile of figure 21. In preferred forms the preform of the ninth embodiment is produced by an injection moulding process as described earlier in this specification. In preferred forms the preform thus produced is reheated and blown on a continuously rotating, non-symmetric preform feed, stretch-blow-moulding machine as described earlier in this specification.

Tenth Preferred Non-Symmetrical Preform Embodiment

[00336] With reference to figure 37 there is illustrated a tenth embodiment of the preform showing alternative cross section arrangements for the purpose of reducing volume of the preform. In this instance like components are numbered as for the fifth embodiment with reference to figure 22. In this instance the cross section wall profile as shown in section AA and section BB is rotated 90 degrees as compared with the wall profile of figure 22. In preferred forms the preform of the tenth embodiment is produced by an injection moulding process as described earlier in this specification. In preferred forms the preform thus

produced is reheated and blown on a continuously rotating, non-symmetric preform feed, stretch-blow-moulding machine as described earlier in this specification.

Differential Wall Thickness System

[00337] With reference to figures 38, 39 and 40, there is illustrated a blown container having a variable wall thickness as a function of radial angle in a horizontal plane and also as a function of the location of the horizontal plane through the blown container **950**.

[00338] The variation may be achieved by a selection of preform wall thickness from amongst the various preform profiles described earlier in the specification.

[00339] The variation in the wall thickness of the blown container may also be achieved independently of the preform wall thickness profile by construction of the interior of the blow mould to assist and encourage differential stretch blowing of different regions of the preform as the walls of the preform located in the blow mould are stretched in both the horizontal and vertical directions to the extent that such is permitted by the internal walls of the preform cavity and the cavity in which the handle **950** is nested.

[00340] In further aspects, control over the wall thickness of the blown container is achieved by a combination of selection of preform wall thickness and blow mould cavity design.

[00341] In further aspects, control over the wall thickness of the blown container is also achieved by control over the temperature profile of the preform walls immediately prior to the introduction to the blow mould cavity.

[00342] This control can be achieved by the shape of the shields covering the handle of the preform during the reheating phase.

[00343] This control can be achieved by timing of the progression of the preforms through the reheating phase.

[00344] With reference to figure 38 there is illustrated a PET container **950** having a neck portion **951** and a body portion **952** to which is integrally connected a PET handle **953**; the PET handle **953** integrally connected at least a first connection point **954** to the container; the PET container blown from a PET preform in a stretch blow moulding process; wherein a region in the form of a strip **955** of PET material is located on the container **950** under the PET handle **953**.

[00345] Figure 38 further illustrates a PET container having a neck portion and a body portion to which is integrally connected to a PET handle; the PET handle comprising an elongate portion of PET material integrally connected at least a first connection point to the container; the PET container blown from a PET preform in a stretch blow moulding process; wherein a region in the form of a strip of PET material is located on the preform and corresponding container opposite the elongate portion of PET material.

[00346] Figure 38 further illustrates a PET container having a neck portion and a body portion to which is integrally connected to a PET handle; the PET handle integrally connected at least a first connection point to the container; the PET container blown from a PET preform in a stretch blow moulding process; wherein a region in the form of a strip of PET material is located on the preform and corresponding container opposite the PET handle.

[00347] Preferably the handle **953** and the narrow strip **955** form a solid mass **956** thereby to maintain the integral connection between the handle **953** and the blown container **950**.

[00348] Preferably the integrally connected handle and the narrow strip form a solid connected mass thereby to strengthen the integral connection between the handle and the blown container.

[00349] Accordingly, in a further broad form of the invention there is provided a PET container stretch blow-moulded from a preform; the preform and the container having a neck portion and a body portion to which is integrally connected a PET handle; the PET handle

comprising an elongate portion of PET material integrally connected at least at a first connection point on a body portion of the preform and to on the container; the PET container blown from a PET preform in a stretch blow moulding process; wherein a region in the form of a strip of PET material is located on the preform and corresponding container opposite the elongate portion of PET material handle; the strip of material differentiated in thickness from thickness of a wall of the container on a side opposite from that of the connection point.

[00350] Preferably the handle and the narrow strip forms a solid mass thereby to maintain the integral connection between the handle and the blown container.

[00351] Preferably the elongate portion of PET material comprises a stem.

[00352] Preferably the PET handle is connected at a second connection point to the container.

[00353] Preferably the first connection point is an upper connection point.

[00354] Preferably the second connection point is a lower connection point.

[00355] Preferably the preform has a neck portion and an expandable portion located there below the neck portion.

[00356] Preferably the region of the preform body defined by the strip between the two attachment points remains substantially stable during the stretching and blowing of the container.

[00357] Preferably both the regions of the outer and inner surface layers laterally away from the narrow trip are subjected to biaxial stretching.

[00358] Preferably the outer surface of the narrow strip remains substantially stable but the wall of the container at the strip and the inner layers between the handle attachment points undergoes a degree of flow and thinning together with surrounding regions as the plasticised PET material comes under the influence of the stretching and blowing forces.

[00359] Preferably the PET handle is formed in the same mould as and at the same time as the preform is moulded.

[00360] Preferably the loading of plastics material in the region of the wall subtended between the first location and the second location is differentially controlled as a function of location on the circumference of the wall in this region.

[00361] Preferably the region is designated the differential loading region.

[00362] Preferably there is an increased loading of material in the region of immediately between the first location and the second location points whilst, an opposite region located diametrically opposite the differential loading region has is reduced in material thickness removed from it as indicated in dotted outline.

[00363] Preferably the differential material loading is a function of circumferential position on walls of the preform aids in providing control over the wall thickness of the blown container.

[00364] Preferably the stretch blow moulding process is a two stage stretch blow moulding process.

[00365] Preferably the differential loading region subtended between the first location and the second location remains substantially unchanged during the blowing process.

[00366] Preferably the differential loading region is an extension of and part of the neck portion of the preform.

[00367] Preferably the preform includes a symmetrical thickening of the wall of the preform in the lower region of the body portion which extends from immediately below the point of connection of the lower end of handle.

[00368] Preferably at a second, intermediate region located between the first connection point and the second connection point of handle, the wall thickening of the preform tapers gradually from a first thickness T1 to a second thinner thickness T2.

[00369] Preferably the thickening is symmetrical about the longitudinal axis of the preform.
[00370] Preferably the thickening results in a controllable increase in the thickness of material in the blown container in the corresponding intermediate region, and also in a sub-region immediately below the first connection point of the lower end of handle.
[00371] Preferably the thickening results in a controllable increase in the thickness of material in the blown container in the corresponding intermediate region, and also in a sub-region immediately below the second connection point of the lower end of handle.
[00372] With reference to Figure 42, there is illustrated a preform **1010** injection moulded entirely from PET plastics. In this instance, the preform includes an integral PET handle **1426** in this instance connected at least at an upper connection point **1422.** In this particular instance, the handle **1426** is also connected at a lower connection point **1424.**

[00373] As for previous embodiments, the wall thickness of the preform may be differentiated throughout the preform in order to achieve particular end wall thicknesses of the container **1428** blown there from – see Figure 43.

[00374] In particular, the wall thickness **1421A** in the region of the preform **1420A** located beneath the handle **1426** and on the side of the preform closest to the handle **1426** may be differentiated from the wall thickness **1441A** in a region **1440A** located on an opposite side of the perform from the region **1420A**. The intention is to control preform wall thickness so that the wall thickness of corresponding locations on the blown container **1428** is such that the wall thickness **1421B** in the region of the container **1420B** located beneath the handle **1426** and on the side of the container closest to the handle **1426** may be differentiated from the wall thickness **1441B** in a region **1440B** located on an opposite side of the container **1428** from the region **1420B.**

[00375] The resultant differentiated wall thicknesses in the blown container may be achieved by selection of wall thicknesses in the preform **1410.** In an alternative form, the resultant differentiated wall thicknesses in the blown container may be achieved by selective movement of the PET in the walls during the stretch blow moulding process. In particular forms, both methodologies may be used together.

[00376] In a particular form, the region **1420B** is blown against a substantially planar inside wall **1460** of the blow mould **1461** (see inset of Figure 43) such that the region **1420B** itself constitutes a substantially planar region.

[00377] In a particular preferred form, the upper connection point **1422** is located on a non-expanding region **1470A** of the preform corresponding to a substantially non-expanding region **1470B** of the resultant blow container **1428**.

[00378] In a particular preferred form where the lower end of the integral handle **1426** is integrally connected to the preform at lower connection point **1424**, the lower connection point is connected to the substantially planar region of the blown container **1410.**

[00379] In this embodiment of the preform and container blown there from with reference to figures 42 and 43 a region of the wall of the blown container is differentiated in thickness by an increased loading of material in the region from the reduced wall thickness diametrically opposite the handle. The region **1420B** may be substantially planar.

[00380] In a particular form, the rigid handle **1426** and the substantially planar region form an interconnected rigid structure whereby flex of the handle **1426** in use relative to the container **1428** is resisted. This feature may be particularly advantageous for larger volume containers **1428** – for example four litre containers where the weight of the liquid in the container may be substantial.

[00381] In one form during the stretch blow moulding operation the region **1420A/ 1420B** remains substantially stable, with regions laterally on either side of the region subjected to bilateral stretching.

[00382] A PET container stretch blow-moulded from a preform; the preform and the container having a neck portion and a body portion to which is integrally connected a PET handle; the PET handle comprising an elongate portion of PET material integrally connected at least at a first connection point on a body portion of the preform and on the container; wherein a region in the form of a planar region is located on the container opposite the handle; the planar region differentiated in thickness from thickness of a wall of the container on a side opposite from that of the handle.

[00383] Preferably the handle and the planar region form a solid mass thereby to maintain the integral connection between the handle and the blown container.

[00384] Preferably the integral handle comprises a stem.

[00385] Preferably the PET handle is connected at a second connection point to the container.

[00386] Preferably the first connection point is an upper connection point.

[00387] Preferably the second connection point is a lower connection point.

[00388] Preferably the preform has an expandable portion located below the neck portion.

[00389] Preferably the region of the preform body defined by the substantially planar region between the two attachment points remains substantially stable during the stretching and blowing of the container.

[00390] Preferably the PET handle is formed in the same mould as and at the same time as the preform is moulded.

[00391] Preferably loading of plastics material in the region of the wall **1420A/1420B** subtended between the upper connect point and lower connection point is differentially controlled as a function of location on the circumference of the wall in this region; the region designated the differential loading region.

[00392] Preferably there is an increased loading of material in the region immediately between the first location and the second location points whilst, an opposite region located diametrically opposite the differential loading region is reduced in material thickness.

[00393] Preferably differential material loading as a function of circumferential position on walls of the preform aids in providing control over the wall thickness of the blown container.

[00394] Preferably the stretch blow molding process is a two stage stretch blow molding process.

[00395] Preferably the differential loading region subtended between the first location and the second location remains substantially unchanged during the blowing process.

[00396] Preferably the differential loading region is an extension of and part of the neck portion of the preform.

Bifurcated Strengthening System

[00397] With reference to Figures 42 and 43 and the differential wall thickness system embodiment described above a further feature may be added to the integral handle of that embodiment to further strengthen its connection to the body of the container **1428.**

[00398] In this embodiment as shown in Figures 42 and 43, the handle **1426** includes a curved strengthening element **1481** at a lower end of the handle. In one instance, the strengthening element **1481** is located at the junction between the arcuate section **1482** and the straight sections of the handle **1483**. In this region the orientable plastic material is bifurcated to form an enclosing, generally triangular element **1484** which may include a central web of conforming generally triangular shape.

[00399] Similar bifurcated and preferably webbed strengthening elements **1485** and **1486** may be provided at each of the upper and lower connection regions.

[00400] The combination of the connection to the substantially planar region **1420A, 1420B** with the strengthening elements **1485** and **1486** provides a closed rigid structure imparting confidence to the user, particularly when the container is of relatively large volume.

Notes on the Handle

[00401] In preferred forms the integral handle of the preform is not substantially deformed or substantially changed in shape during the stretch-blow-moulding process but substantially retains its as-injection-moulded shape. The blow-moulding cavity shown in Figure 10 includes a recess specifically shaped to the form of the handle as injection moulded. This it will be understood is also a primary function of the heat shield to protect the handle from heat which could cause distortion of the handle while the preform is transported around the preheating stage of the machine.

Injection Moulding of Preforms

[00402] A preferred system of injection moulding any one of the above described preforms will now be described with reference to Figures 29 to 31. As noted elsewhere, the integral, double connect handles of the containers which are stretch-blow-moulded from the preforms, introduce considerable complexity in the design and operation of the injection moulding tooling.

[00403] Typically, in the injection moulding of preforms for symmetrical or non-handled containers, the bodies of the preforms below the neck are formed in cavities in the "hot", fixed section of the injection moulding die, with the threaded neck portions formed in opposing half cavities carried on the face of the moving die section. After a mould cycle, when the die opens, the bodies of the preforms are drawn out of their cavities by the necks which, at this first opening stage, are retained in the still closed opposing half cavities and move with the opening die section. The opposing half cavities now part to release the necks and a stripper plate is activated to force the preforms off the cores (which are fixed to the moving die section).

[00404] With reference now to Figure 29 to 31, for preforms **1100** with handles **1112**, only that section **1114** below the handle can be formed in cavities **1116** in the heated, fixed section **1118** of the die **1120**, with the neck **1122** and handle **1112** formed in much longer and more complex opposing half cavities **1124** carried on the moving die section **1126**. Again, the cores **1128** to form the internal shape of the preforms **1100** are fixed to the moving die section **1126** and are located on the common axis of the cavities **1116** in the heated fixed side of the die and the opposing half cavities.

[00405] In contrast to the demoulding of symmetrical preforms, the bodies of which are exposed to air immediately the die opens, a much larger section of the preforms of the present invention is retained in the opposing half cavities **1124** and therefore require a longer delay before preforms have cooled and are sufficiently stable for stripping off the cores **1128**. This adds considerably to the mould cycle time for preforms with handles.

[00406] In order to reduce cycle time and thus increase production, in the system of the present invention referring now to Figure 32, a robot **1130** (only a portion of the arm of which is shown in Figure 32) is employed in the demoulding of the preforms **1100**. The robot arm end effector **1132** is fitted with an array **1134** of vacuum cups **1136**, equal in number and spaced according to the number and spacing of the cavities in the injection moulding die as shown in Figure 31. Towards the end of a mould cycle this array **1134** of vacuum cups is poised above (or to the side of) the injection moulding die **1120** and as soon as the die opens sufficiently to allow insertion of the array, the robot brings the array into registered position between the parted sections **1118** and **1126** of the die, and advances the vacuum cups **1136** to fit over the lower ends of the preforms.

[00407] It is important for correct extraction of the preforms that the handles remain aligned in their as-moulded orientation to prevent rotation of the handles into positions at which they may be caught on edges of the opposing cavity halves. For this reason the vacuum cups are provided with a slot or channel **138** at their outer ends which slides around the lower end of the handle. By this means also a larger portion of the preform is covered by the vacuum cup. Vacuum is now applied to the cups **1136** and the robot retracts the array **1134**, and the preforms **1100** now secured by vacuum pressure in the cups, to draw the preforms off the cores. Once free of the cores the array of vacuum cups and retained preforms are withdrawn from between the heated fixed section **1118** and the moving side **1126** of the die,

and rotated so that the axes of the preforms are in a substantially vertical orientation. Vacuum pressure is then cut allowing the preforms to fall from the vacuum cups into a receiving bin.

[00408] The advantage of the use of vacuum in the demoulding process rather than a conventional stripper plate, is that the application of vacuum aids significantly to the cooling of the preforms, thus allowing their extraction at an earlier point in the mould cycle and shortening that cycle. This is particularly beneficial for the preforms of the present invention in which the end below the handle, being the last part of the preform to be formed (injection proceeding from the tip of the closed end of the preform), is at the highest temperature when the die opens. Additionally the slot or channel which accommodates the lower part of the handle, provides for a greater portion of the preform to be subjected to the cooling provided by air flow into the suction cups when vacuum is applied just before suction cups fully envelop the lower and mid portions of the preforms.

[00409] The cooling proceeds further as the robot draws the array of vacuum cups and preforms away from the die and over a receiving bin. The array is then rotated from the initial as-removed from the die position, that is with the axes of the preforms horizontal, to the vertical allowing the preforms to fall out of the cups when vacuum pressure is cut, and into the receiving bin.

Single Connect Integral Handle of PET Container and Method of Production

[00410] PET polymer is an expensive material from which to produce what are in the main, single use bottles. There are of course well-known advantages of PET; firstly in the clarity of the material allowing clear viewing of a container's contents and, secondly, that the material lends itself to recycling. However, it is not possible, or at least very complicated to provide an integral handle in a PET stretch blow-moulded container such as the handle provided by forming around a hole in the side of the bottle as commonly provided in HDPE containers.

[00411] As well as its aesthetic appeal, PET containers provided with an integral handle would add a desirable feature in ease of manipulating the container. Some solutions are known in which a separately injection moulded handle is positioned in the stretch blow-moulding cavity and the container blown so that the ends of the handle are captured by material flowing around them, such as disclosed in JP2010-274967. But these arrangements are complicated and difficult in practice.

[00412] As best seen in figure 1, to provide the strength needed for a secure connection of the loop of the handle **26** to the container **28** of figure 43, a considerable volume of polymer is expended in the bracing structures at the upper and lower connection areas **22, 24** and at the intersection **30** of the arcuate portion **32** of the handle with the straight lower part **34**.

[00413] Turning now to figures 44 and 45, the integral handle **40** of the preform **42** and of the container **44** of the present invention, is connected to the cylindrical body portion **46** of the preform. It will be noted that, in this form of the handle **40**, it has been found there is no need for an increased thickness of the wall in the connection region **48** or in the region **50** extending below the connection region, so that in effect the wall thickness of the cylindrical body portion **46** of the preform, is uniform. Again, that uniform wall thickness is carried over into the container **44** of figure 4, blown from the preform of figure 44.

[00414] In this instance, the handle **40** includes and upper arcuate portion **52** extending from the single connection region **48** which transitions into a substantially straight, downwardly projecting portion **54**. The handle **40** comprises of a central web **56** lying in a plane passing through the centreline **58** of the body portion of the preform. The web **56** is bounded by a continuous edge **60** around the periphery of the web from an upper junction point **62** to a lower junction point **64** on the body portion **46** of the preform.

[00415] The handle **40** is further comprised of a rib **66**, normal to the web **56** which extends along the edge **60**. The rib **66** projects outwardly and symmetrically from both sides of the plane so that in effect the web **56** and the rib **66** form an I-beam like cross section. The upper and lower cross sections of the rib **66** extend to meld with the surfaces of both the preform and of the container. These areas of the rib and of the central web combine to provide the strength of connection of the handle with the container required for manipulating a filled container.

[00416] In some preferred embodiments, the inward facing sections **68** of both the web **56** and the rib **66** are provided with one or more scallops configured to aid the gripping of the handle by a user. Also preferably in some embodiments, the handle may additionally be provided with a thumb support **70** as that shown on the container of figure 45, projecting from an upper portion of the rib.

[00417] By means of the handle **40** connected at a single connection region on both the body portion of the preform and on the body of the container stretch blow-moulded from the preform, significant savings in PET polymer are achieved over the double connect handle of the prior art. This has allowed the reduction in wall thickness in the region of connection of the handle so that in both the preform and the container, the wall thickness in the region of the handle connection is substantially equal to the wall thicknesses of adjacent regions.

[00418] Figure 46 is a side section view of a further example of a preform with a handle attached at a single point with an alternative variable wall profile.

[00419] In this instance the preform A10 has side walls having a first relatively thin thickness A11 near the neck end of the preform and having a second relatively thick thickness A12 near a lower end of the preform furthest from the neck A13.

[00420] In this instance the first relatively thin thickness wall transitions to the relatively thick thickness wall by way of a transition zone A14 as illustrated in Figure 46.

[00421] In this instance the inside wall diameter A15 reduces as a function of the length of the preform, reducing progressively away from the neck A13 thereby to create the wall thickness of the transition zone A14 and the relatively thick thickness wall A12.

[00422] In this instance the outside wall diameter A16 either remains relatively constant as a function of the length of the preform or, in alternative version, increases slightly as a function of length away the neck A13.

[00423] The end result is a preform having a relatively thick wall thickness furthest away from the neck. In a preferred form, this provides increased material for stretch blowing to form a relatively enlarged volume of a blown container blown from the preform A10. The rationale for the location of wall thickening in a preform intended for stretch blowing as part

of a two stage stretch blowing process or system is described in the technical literature – see for example Plastic Blow Moulding Handbook by N.C. Lee published Springer Netherlands 31 May 1990 – in particular pages 101 to 107 thereof.

[00424] Figure 47 is a side section view of a further example of a preform with a handle attached at a single point with an alternative variable wall profile.

[00425] In this instance the preform A20 has side walls having a first relatively thin thickness A21 near the neck end of the preform and having a second relatively thick thickness A22 near a lower end of the preform furthest from the neck A23.

[00426] In this instance the first relatively thin thickness wall transitions to the relatively thick thickness wall by way of a transition zone A24 as illustrated in Figure 47.

[00427] In this instance the inside wall diameter A25 either remains relatively constant as a function of the length of the preform or, in alternative version, increases slightly as a function of length away the neck A23.

[00428] In this instance the outside wall diameter A26 increases as a function of the length of the preform, increasing progressively away from the neck A23 thereby to create the wall thickness of the transition zone A24 and the relatively thick thickness wall A22.

[00429] The end result is a preform having a relatively thick wall thickness furthest away from the neck. In a preferred form, this provides increased material for stretch blowing to form a relatively enlarged volume of a blown container blown from the preform A10. The rationale for the location of wall thickening in a preform intended for stretch blowing as part of a two stage stretch blowing process or system is described in the technical literature – see for example Plastic Blow Moulding Handbook by N.C. Lee published Springer Netherlands 31 May 1990 – in particular pages 101 to 107 thereof.

[00430] In the instance of single connect handle A17, A27 illustrated in Figures 46 and 47 the single connect located higher up on the preform near the neck A13, A23 allows for more flexibility in wall thickness design and optimum use of PET material as described earlier.

Preform Distortion Control and Method

[00431] Figures 48 and 49 show an injection moulded preform **10** with an integrally connected, in this instance a double-connected handle **12**, as initially injection moulded and distorted subsequent to passage through a preheating conditioning stage of a stretch blow-moulding machine. As can be seen in figure 49, substantial distortion of the preform may occur due to the asymmetry of the preform introduced by the integrally connected handle. The bending of the body portion **14** of the preform pulls the handle out of its as injection moulded position.

[00432] Within limits, the distortion of the cylindrical body **12** of the preform is not of major concern, as long as the stretch rod's movement is not impaired. However, in the stretch blow-moulding of preforms with integral handles, the handles must not be distorted to an extent where they cannot be properly inserted into the pockets in the stretch blow-moulding die intended to maintain their configuration during the stretch blow-moulding cycle.

[00433] To produce a stretch blow-moulded container such as shown in figure 51, in which the handle has a desired configuration, it is necessary to firstly reduce the distortion to within a manageable minimum range, and secondly, to adapt the stretch blow-moulding die to accommodate distortions within this minimum range.

[00434] In a preferred embodiment of the invention, a minimum range of distortions is established by repeated test runs of passing injection moulded preforms **10** through the conditioning stage of the machine with carefully controlled and adjusted parameters. These parameters may include the settings and disposition of heating elements, the temperature gradients at various locations, time of passage and rotation of preforms etc. These test runs will establish a repeatable minimum range of distortions for a given set of parameters around which strategies for controlling the distortion of the handle can be devised.

[00435] Heat shields which protect the handle from excessive heat as a preform passes through the preheating stage must be designed to accommodate a maximum distortion within the minimum distortion range.

[00436] In one arrangement, the design of the integrally connected handle of the injection moulded preform and the cavity of the preform injection moulding die may be adjusted so that, at least to some extent, the distortion induced by the conditioning stage will tend to bring the handle back towards the desired configuration for entry into the handle pockets in opposing cavities of a stretch blow-moulding die.

[00437] The distortion may further be accommodated by a particular shaping of the periphery of the handle accommodating pocket. As shown in figure 50 the handle nesting pocket **16** in each die half **18** are provided with angled lead-in surfaces **20** to guide and force a distorted handle into a proper seated position within the pocket **16**. In this arrangement, the outer edges **22** of the lead-in surfaces **20** is such as to define at least a maximum distortion of the range of distortions. By these means, a container as shown in figure 51 can be produced with the integral handle in its correct designed disposition on the blown container.

[00438] The same strategies for correcting a single-connected integral handle can be adopted as shown in figures 52 and 53. As for the double-connected handle, the single-connected handle **114** of the preform **100** is distorted from its as injection moulded position by the distortion of the body **112** of the preform.

[00439] As described above, strategies for establishing a minimum range of distortions, possibly adjusting the design of the preform as well as providing special lead-in surfaces **120** for the handle nesting pocket **116** in the die halves **118** may be deployed to produce the final stretch blow-moulded container of figure 53.

Industrial Applicability

[00440] The continuous movement of previously injection moulded, non-symmetrical preforms from their initial feeding into the machine **10** through the various continuously rotating stages described above, provides a marked improvement in output and quality of containers stretch-blow-moulded from such preforms. This continuous flow from preform infeed to the outfeed of container is made possible by the unique features of the transfer systems of the machine and the control of orientation of the preform handles at each transfer,

and that of the preform supporting mandrels at transfers into and away from the preheating stage.

[00441] The preforms of the above described embodiments, provide for the stretch-blow-moulding of a container in the stretch-blow-moulding machine, which is equal in capacity to that of the container in Figure 25, but with a significant reduction in the volume of PET and conferring an optimum distribution of material from the preform to form the containers shown in Figures 17 and 18. Thus, the preforms of the invention provide for a considerable reduction in raw material costs in the production of PET containers with integral handle.

CLAIMS

1. A PET container having a neck portion and a body portion to which is integrally connected to a PET handle; the PET handle integrally connected at at least a first connection point to the container; the PET container blown from a PET preform in a stretch blow moulding process; wherein a region in the form of a strip of PET material is located on the container under the PET handle.
2. A PET container having a neck portion and a body portion to which is integrally connected to a PET handle; the PET handle comprising an elongate portion of PET material integrally connected at at least a first connection point to the container; the PET container blown from a PET preform in a stretch blow moulding process; wherein a region in the form of a strip of PET material is located on the preform and corresponding container opposite the elongate portion of PET material.
3. A PET container having a neck portion and a body portion to which is integrally connected to a PET handle; the PET handle integrally connected at at least a first connection point to the container; the PET container blown from a PET preform in a stretch blow moulding process; wherein a region in the form of a strip of PET material is located on the preform and corresponding container opposite the PET handle.
4. The container of any previous claim wherein the handle and the narrow strip form a solid mass thereby to maintain the integral connection between the handle and the blown container.
5. The container of any previous claim wherein the integrally connected handle and the narrow strip form a solid connected mass thereby to strengthen the integral connection between the handle and the blown container.
6. A PET container stretch blow-moulded from a preform; the preform and the container having a neck portion and a body portion to which is integrally connected a PET handle; the PET handle comprising an elongate portion of PET material integrally connected at least at a first connection point on a body portion of the preform and to on the container; the PET container blown from a PET preform in a stretch blow moulding process; wherein a region in the form of a strip of PET material is located on the preform and corresponding container opposite the elongate portion of PET material handle; the strip of material differentiated in thickness from thickness of a wall of the container on a side opposite from that of the connection point.
7. The container of any previous claim wherein the handle and the narrow strip form a solid mass thereby to maintain the integral connection between the handle and the blown container.
8. The container of any previous claim wherein the elongate portion of PET material comprises a stem.
9. The container of any previous claim wherein the PET handle is connected at a second connection point to the container.
10. The container of any previous claim wherein the first connection point is an upper connection point.
11. The container of any previous claim wherein the second connection point is a lower connection point.
12. The container of any previous claim wherein the preform has a neck portion and an expandable portion located there below the neck portion.
13. The container of any previous claim wherein the region of the preform body defined by the strip between the two attachment points remains substantially stable during the stretching and blowing of the container.

14. The container of any previous claim wherein both the regions of the outer and inner surface layers laterally away from the narrow trip are subjected to biaxial stretching.
15. The container of any previous claim wherein the outer surface of the narrow strip remains substantially stable but the wall of the container at the strip and the inner layers between the handle attachment points undergoes a degree of flow and thinning together with surrounding regions as the plasticised PET material comes under the influence of the stretching and blowing forces.
16. The container of any previous claim wherein the PET handle is formed in the same mould as and at the same time as the preform is moulded.
17. The container of any previous claim wherein loading of plastics material in the region of the wall subtended between the first location and the second location is differentially controlled as a function of location on the circumference of the wall in this region; the region designated the differential loading region.
18. The container of any previous claim wherein there is an increased loading of material in the region of immediately between the first location and the second location points whilst, the an opposite region located diametrically opposite the differential loading region has is reduced in material thickness removed from it as indicated in dotted outline.
19. The container of any previous claim wherein differential material loading as a function of circumferential position on walls of the preform aids in providing control over the wall thickness of the blown container.
20. The container of any previous claim wherein the stretch blow moulding process is a two stage stretch blow moulding process.
21. The container of any previous claim wherein the differential loading region subtended between the first location and the second location remains substantially unchanged during the blowing process.
22. The container of any previous claim wherein the differential loading region is an extension of and part of the neck portion of the preform.
23. The container of any previous claim wherein the preform includes a symmetrical thickening of the wall of the preform in the lower region of the body portion which extends from immediately below the point of connection of the lower end of handle.
24. The container of any previous claim wherein at a second, intermediate region located between the first connection point and the second connection point of handle, the wall thickening of the preform tapers gradually from a first thickness T1 to a second thinner thickness T2.
25. The container of any previous claim wherein the thickening is symmetrical about the longitudinal axis of the preform.
26. The container of any previous claim wherein the thickening results in a controllable increase in the thickness of material in the blown container in the corresponding intermediate region, and also in a sub-region immediately below the first connection point of the lower end of handle.
27. The container of any previous claim wherein the thickening results in a controllable increase in the thickness of material in the blown container in the corresponding intermediate region, and also in a sub-region immediately below the second connection point of the lower end of handle.

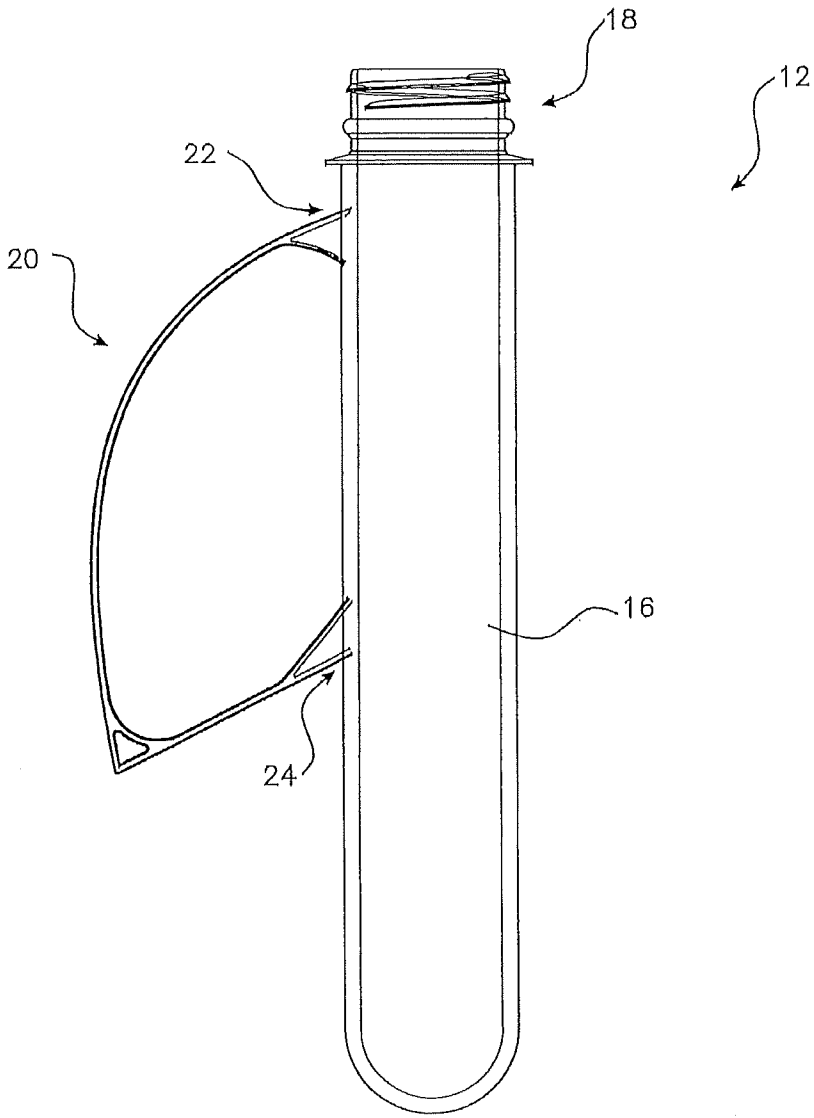

Fig. 1

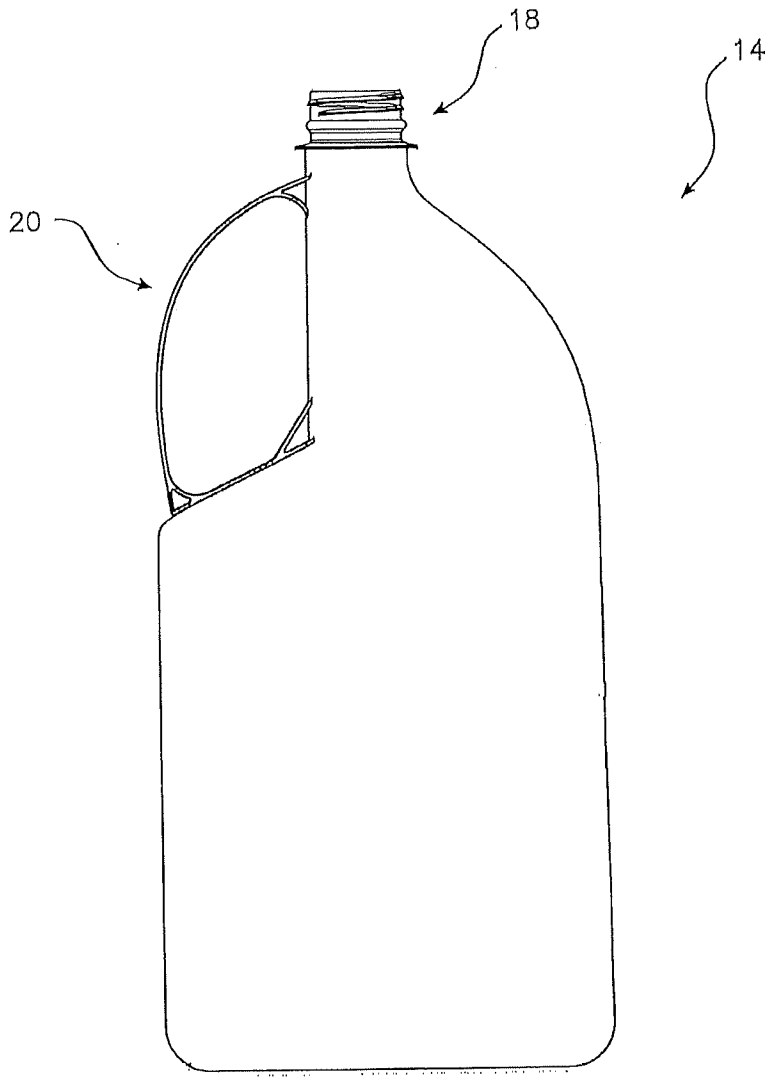

Fig. 2

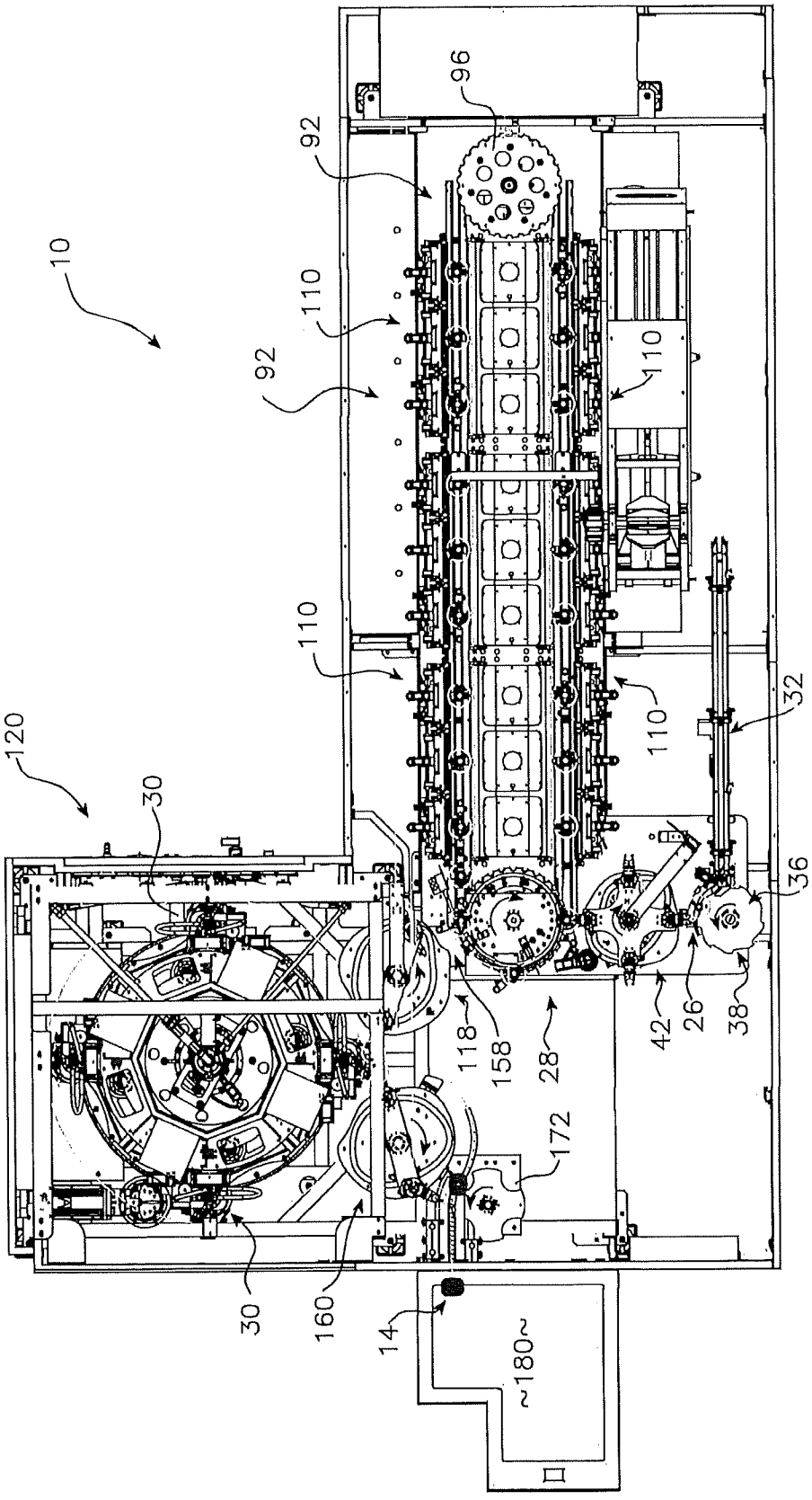
10
92
96
110
92
110
110
110
110
120
30
32
36
118
158
28
42
26
38
172
30
160
14
180

Fig. 3

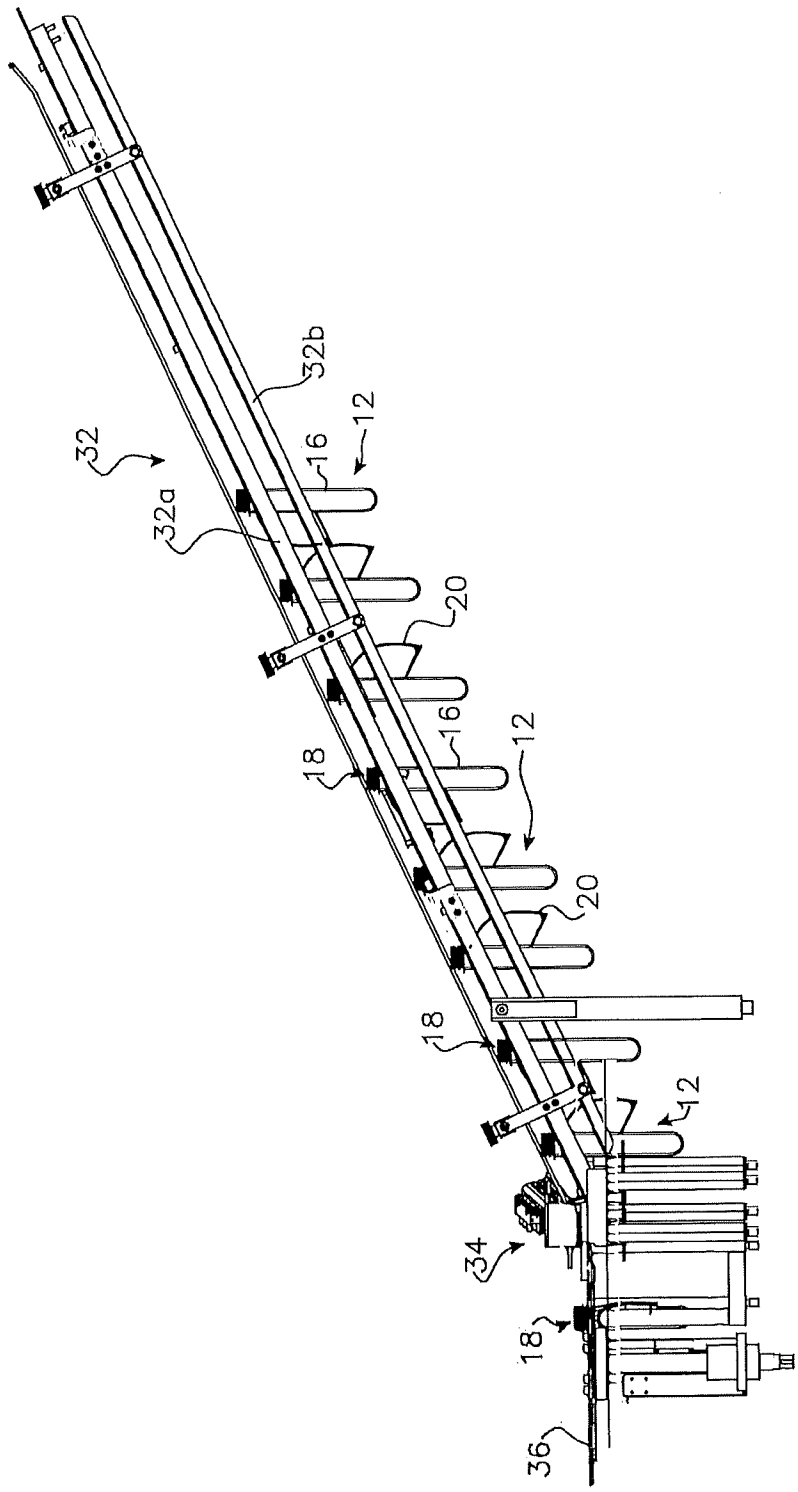

Fig. 4

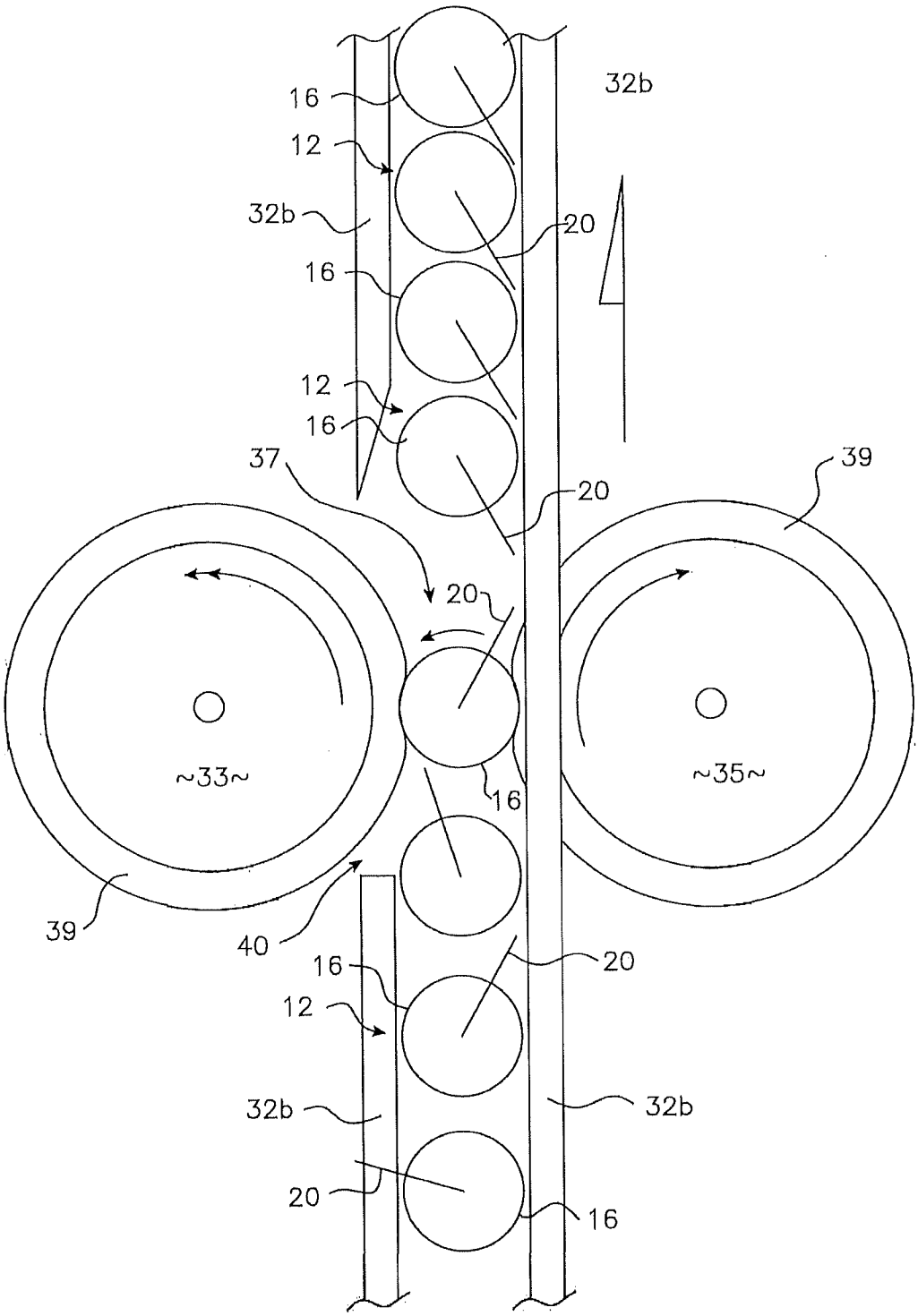

Fig. 4A

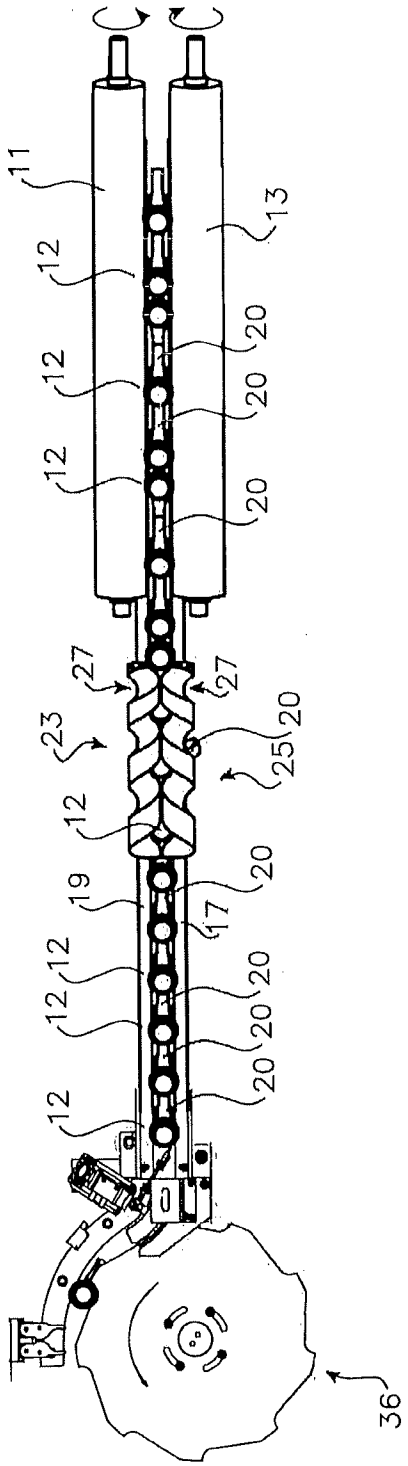

Fig. 4B

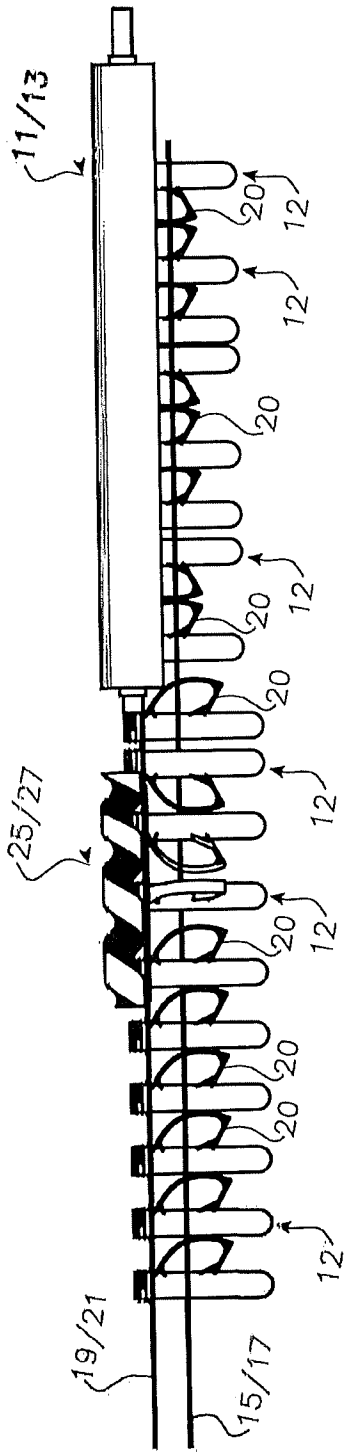

Fig. 4C

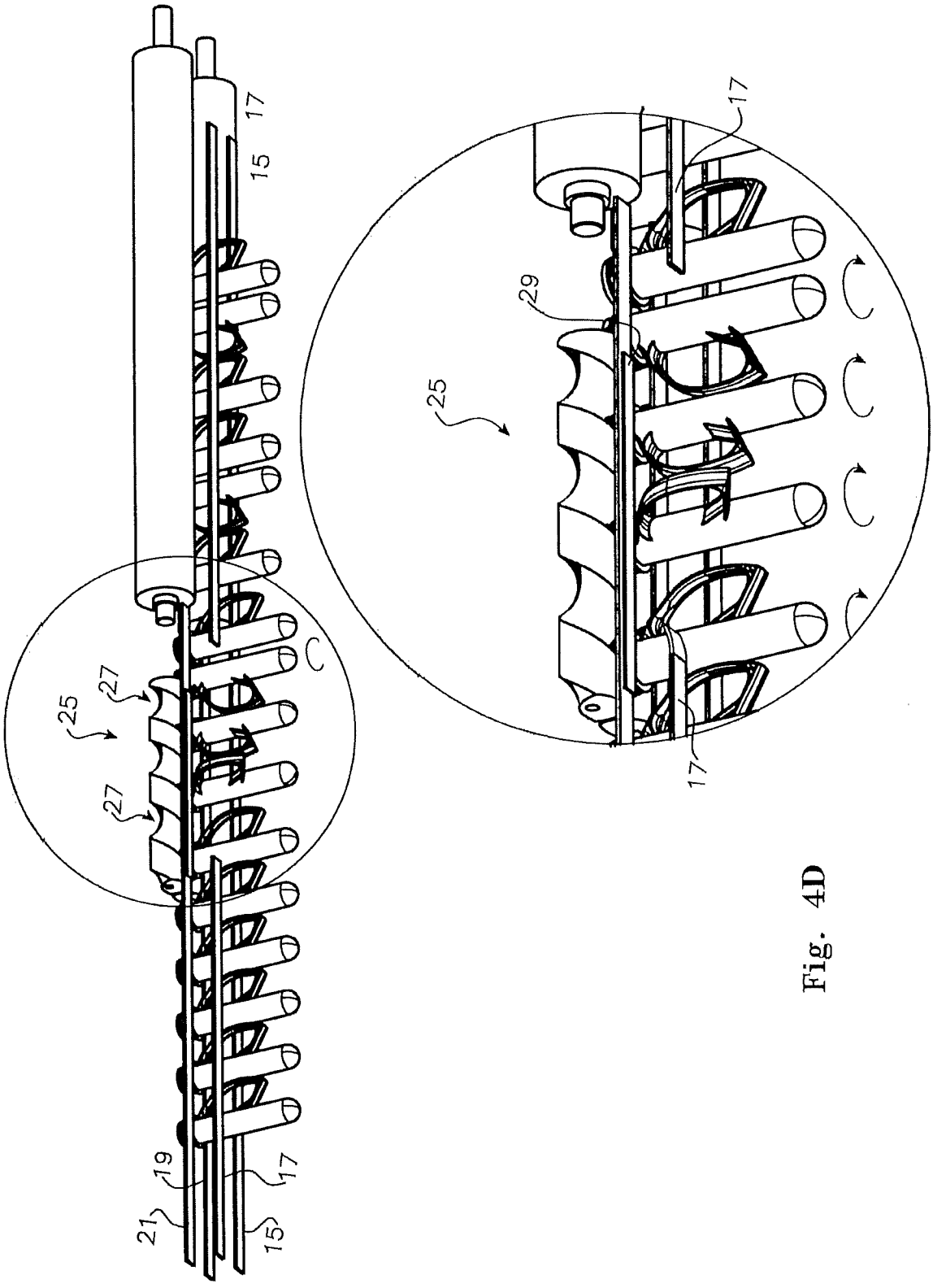

Fig. 4D

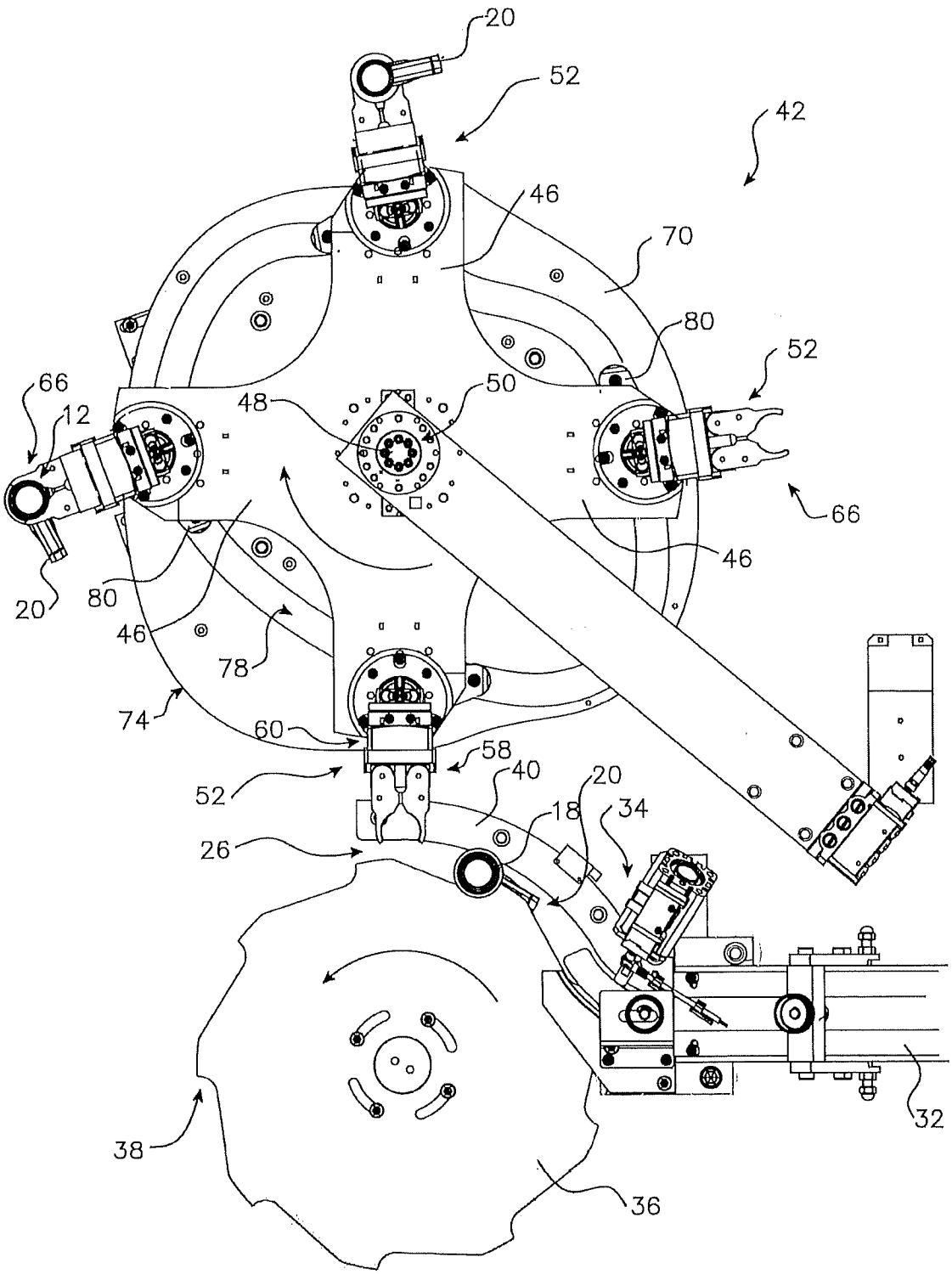
20
52
42
46
70
80
52
66
12
48
50
66
46
20
80
46
78
74
60
58
40
20
52
18
34
26
38
36
32

Fig. 5

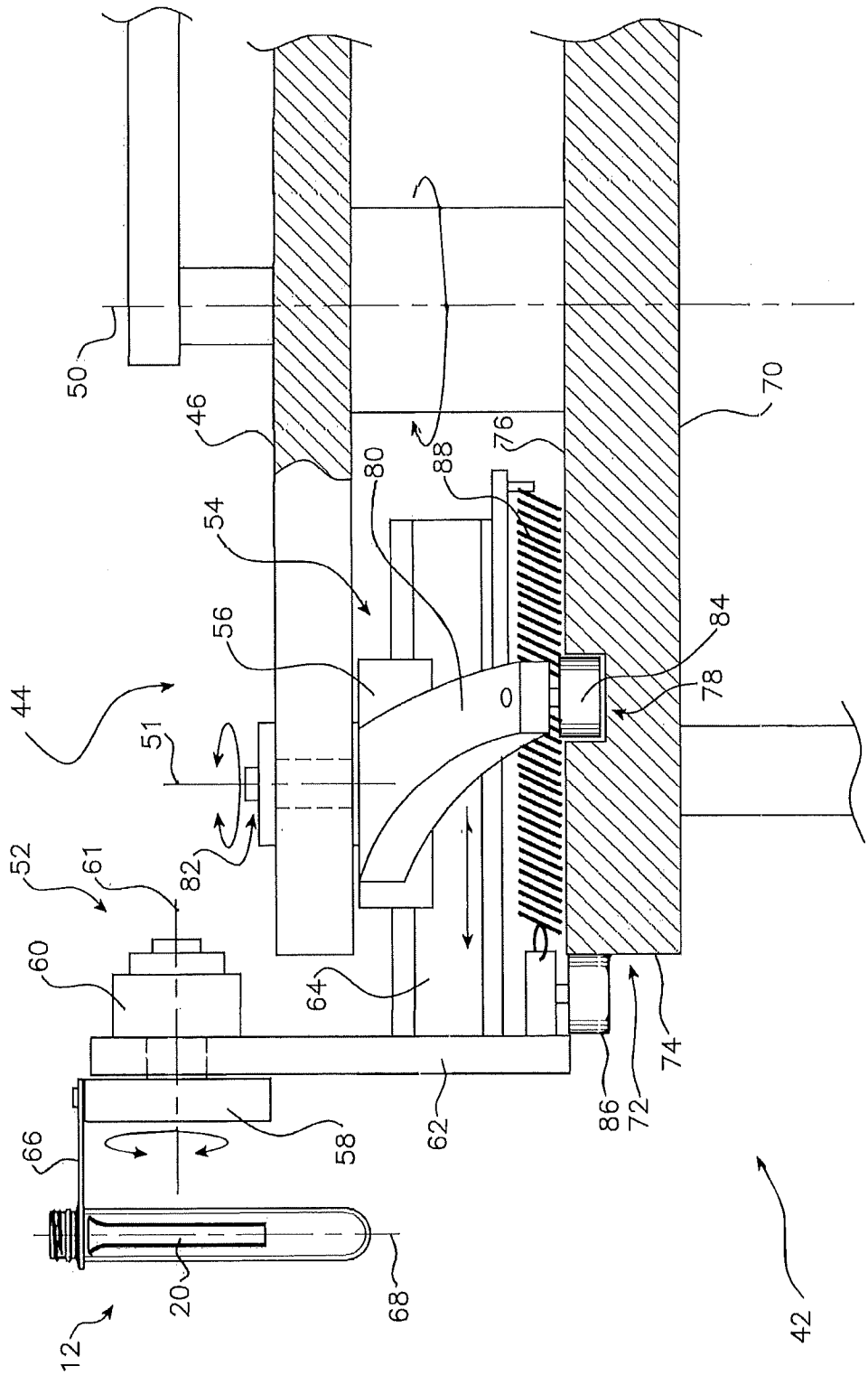
50
46
80
88
76
70
54
56
84
78
44
51
52
61
82
60
64
74
66
58
62
86
72
20
68
12
42

Fig. 6

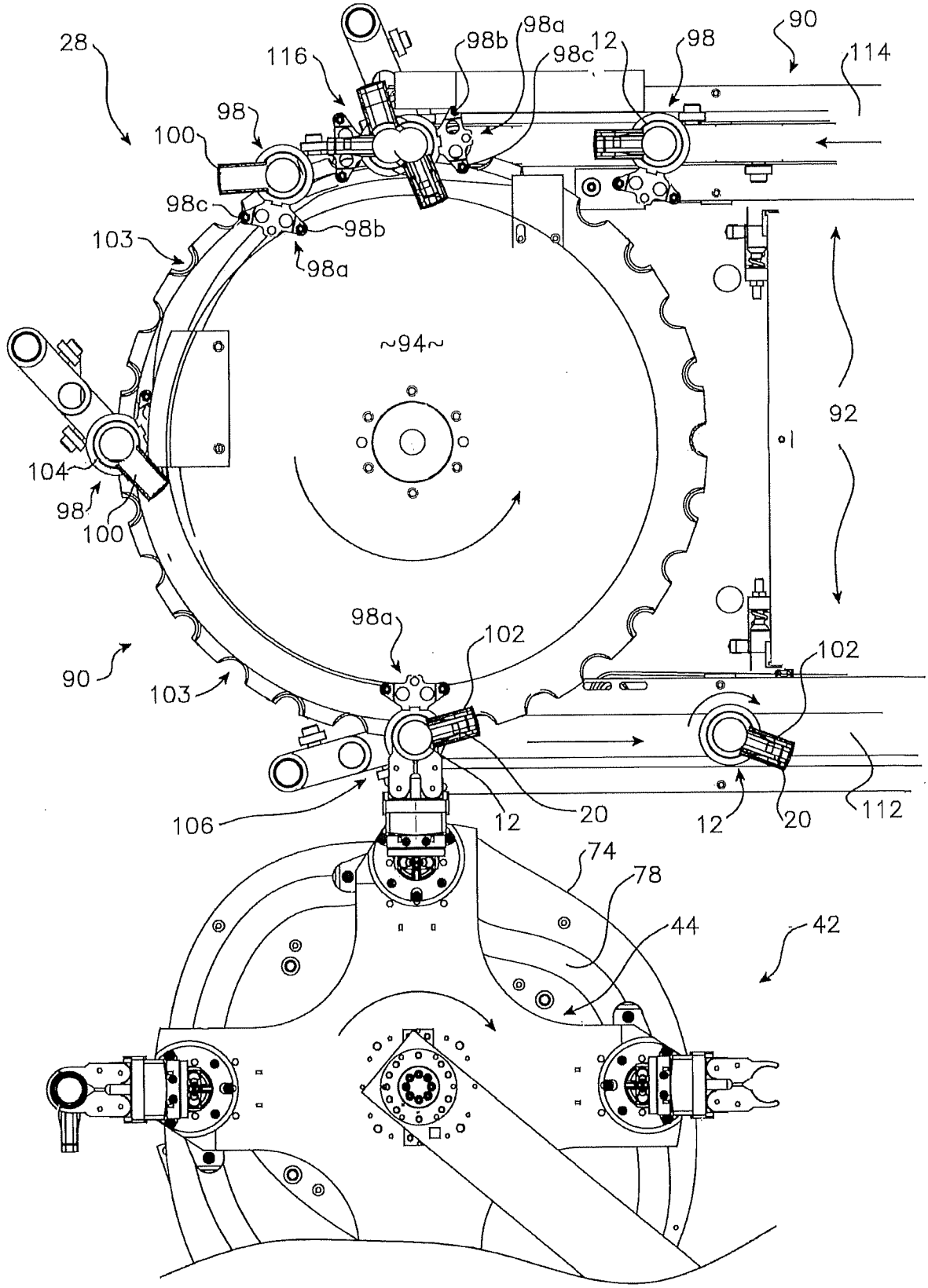
28
116
98b
98a
12
98
90
114
98
100
98c
103
98b
98a
~94~
92
104
98
100
98a
102
102
90
103
106
12
20
12
20
112
74
78
44
42

Fig. 7

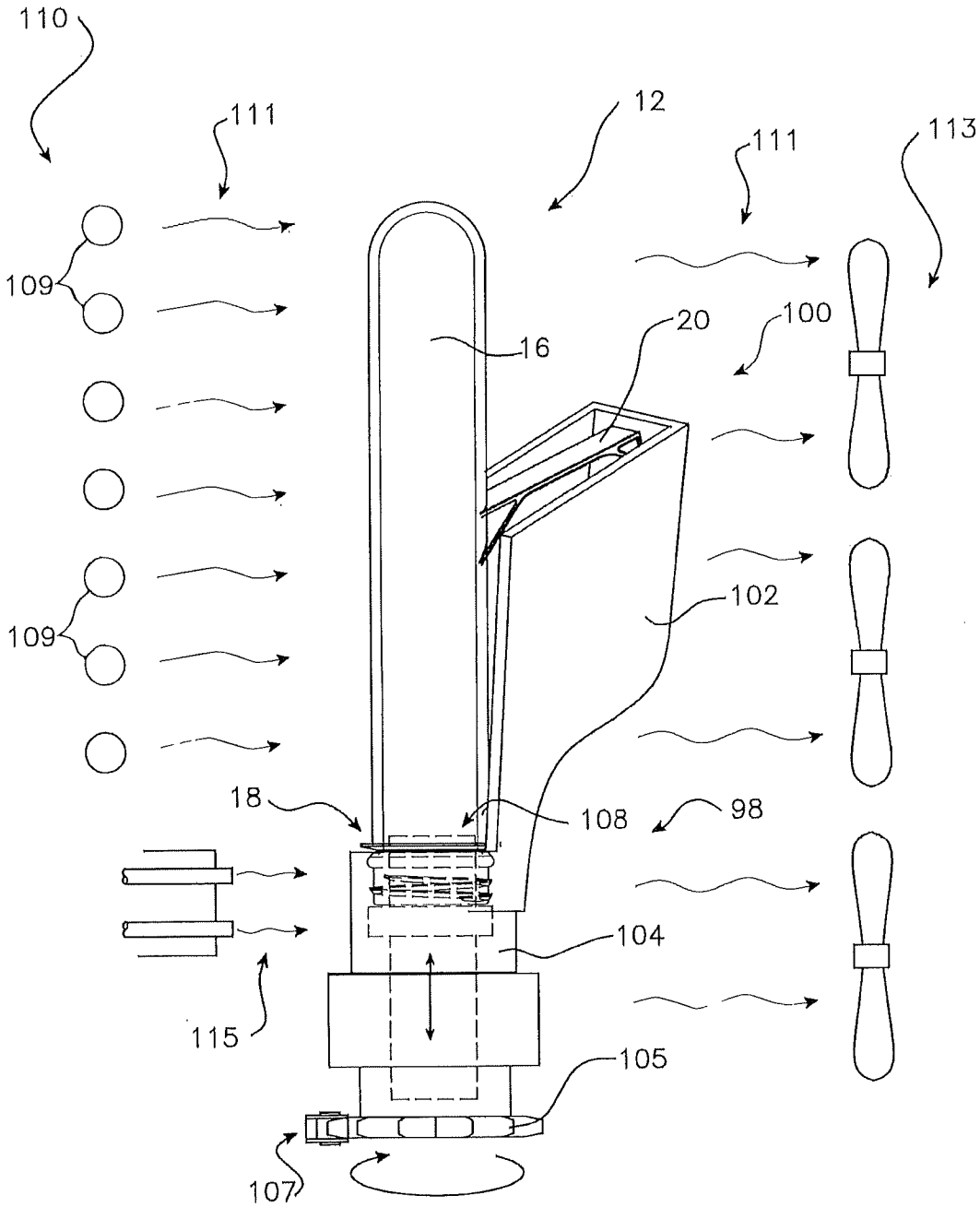

Fig. 8

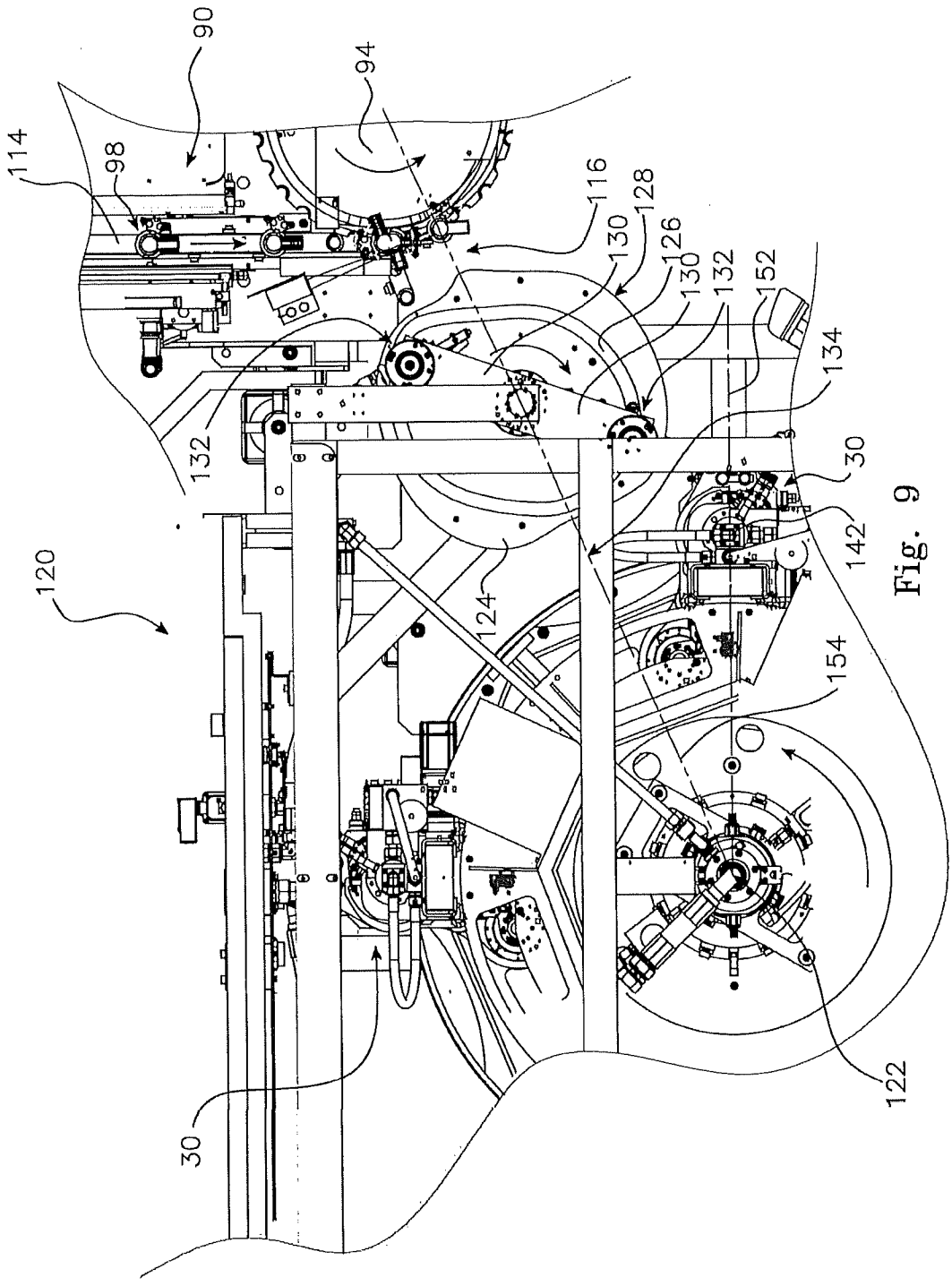
90
94
114
98
116
128
130
126
130
132
152
134
132
30
120
142
124
154
30
122

Fig. 9

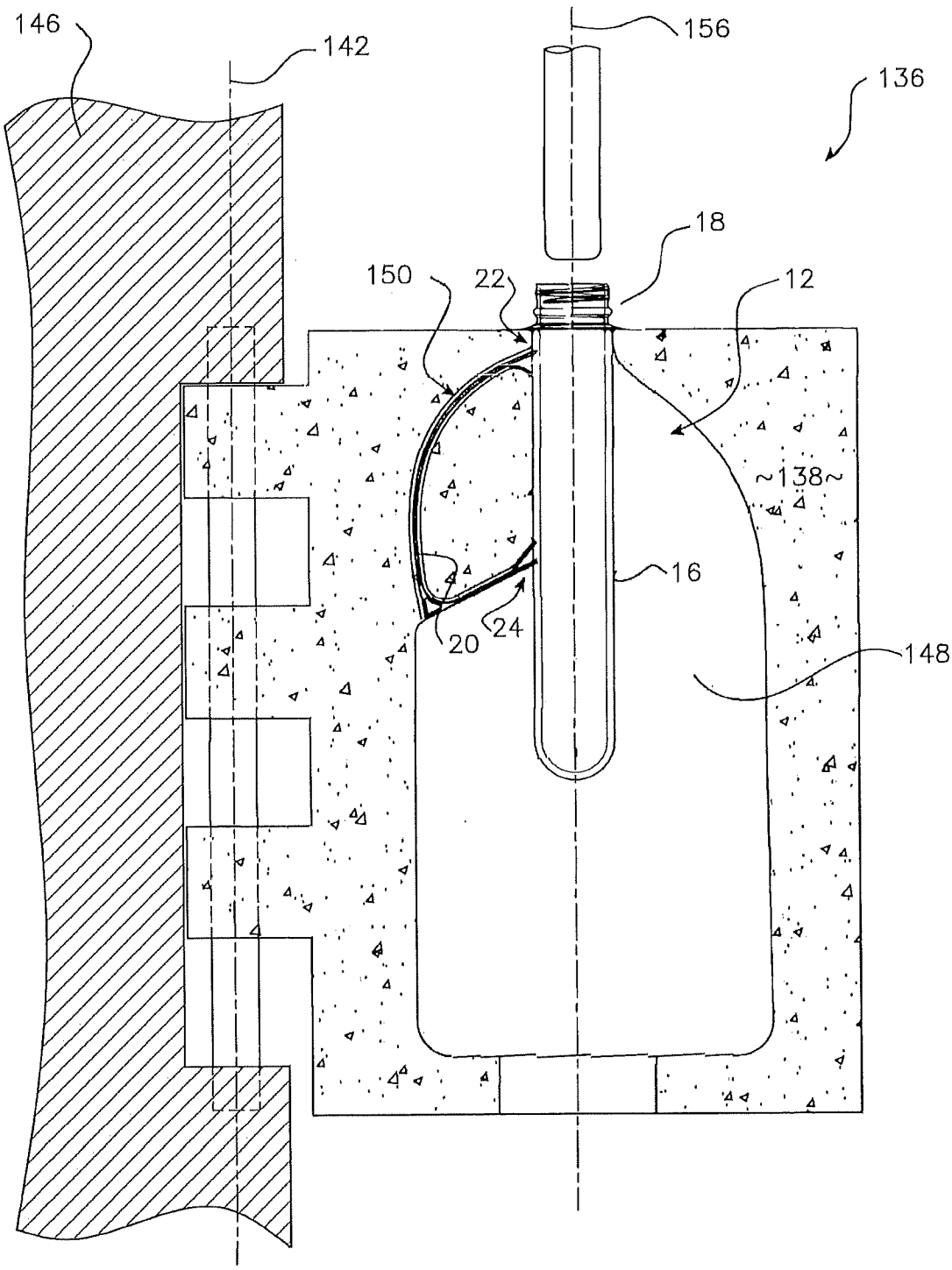

Fig. 10

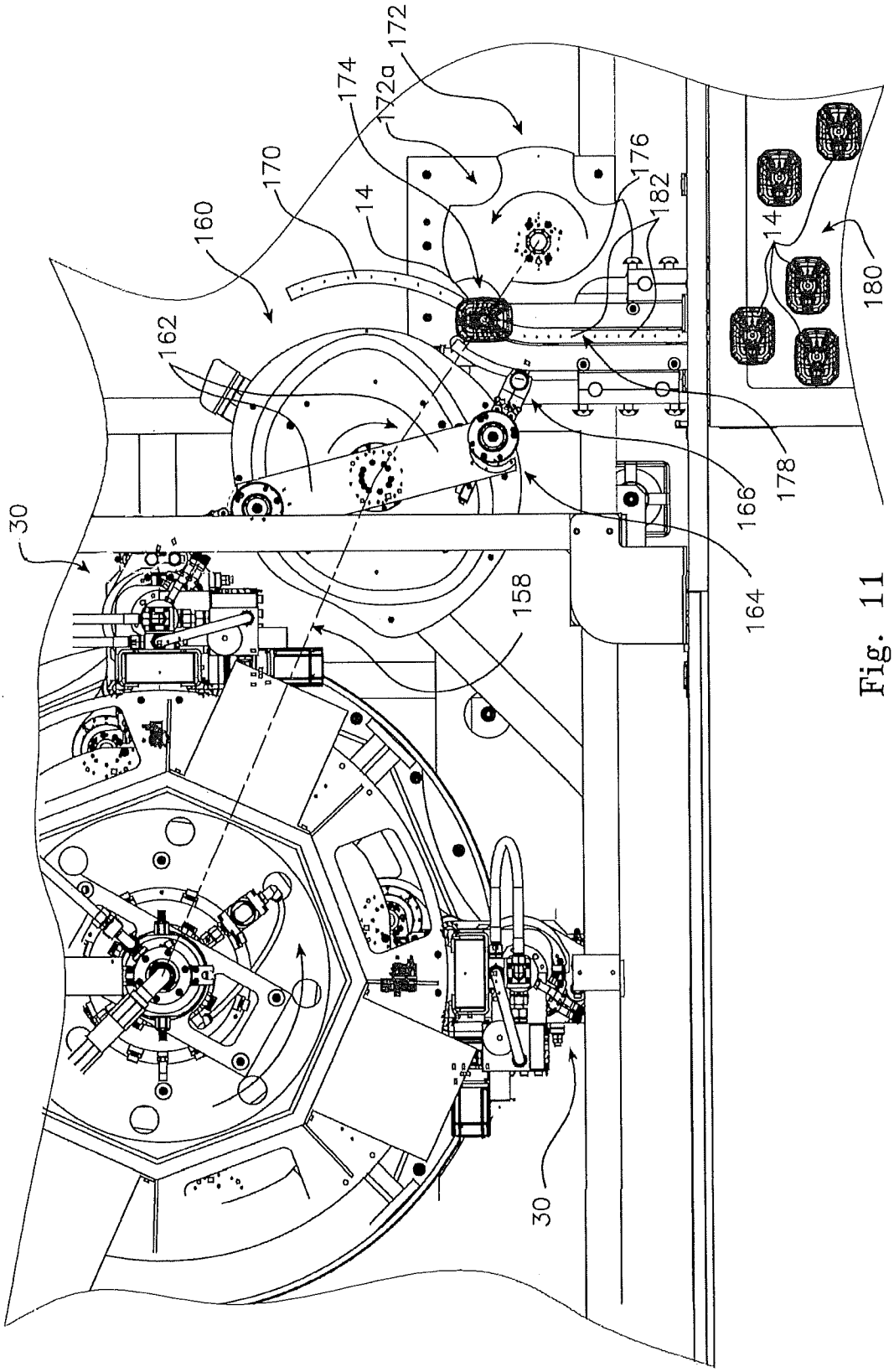

Fig. 11

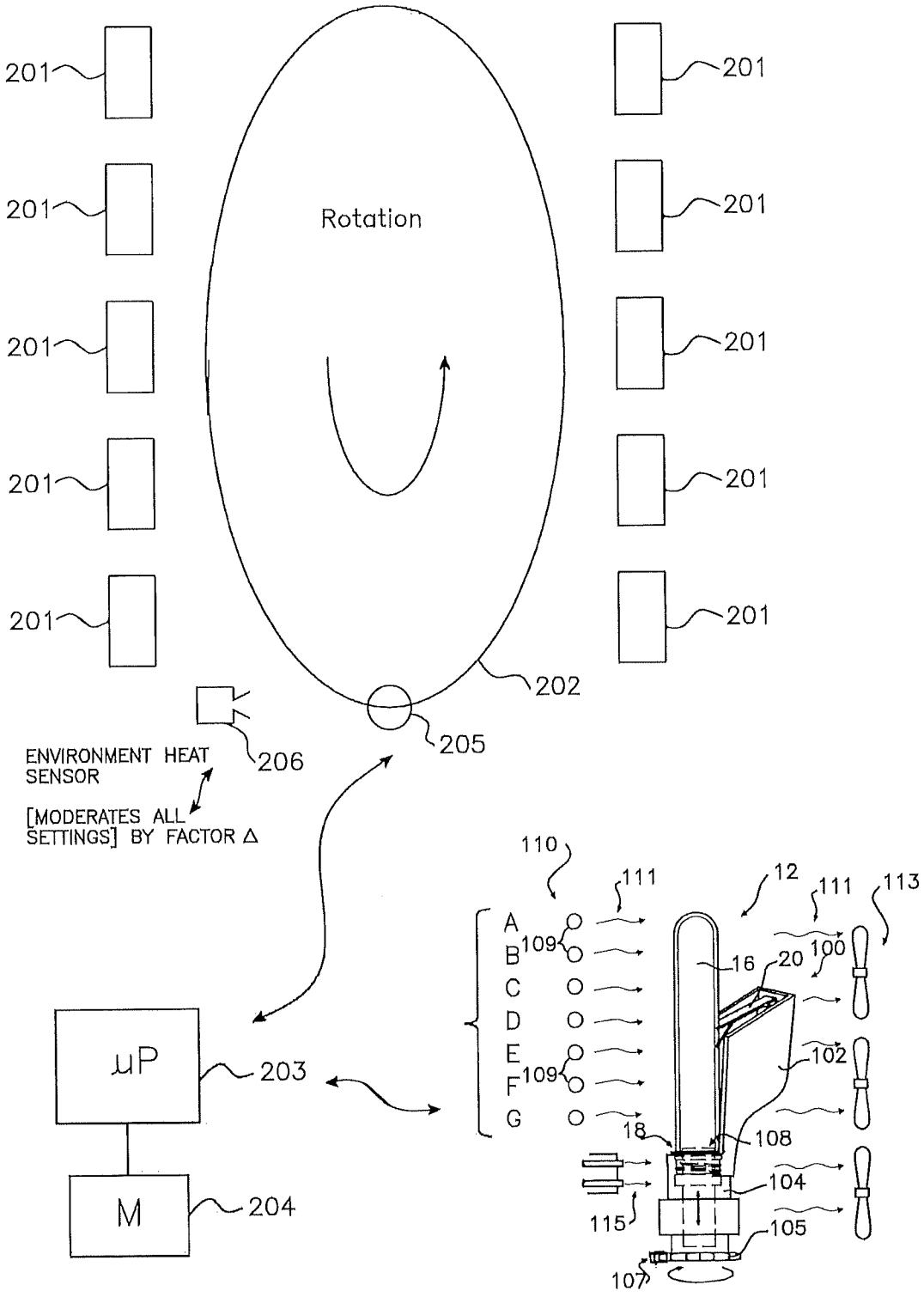
201
201
201
201
201
201
201
201
201
201
Rotation
202
205
206
ENVIRONMENT HEAT SENSOR
[MODERATES ALL SETTINGS] BY FACTOR Δ
μP
203
M
204
110
111
12
111
113
A
B
C
D
E
F
G
109
109
16
20
100
102
18
108
104
115
105
107

Fig. 12

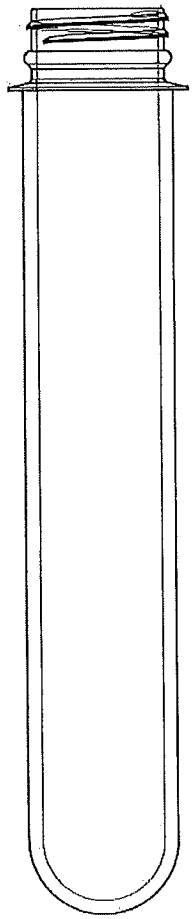

Fig. 13 (Prior Art)

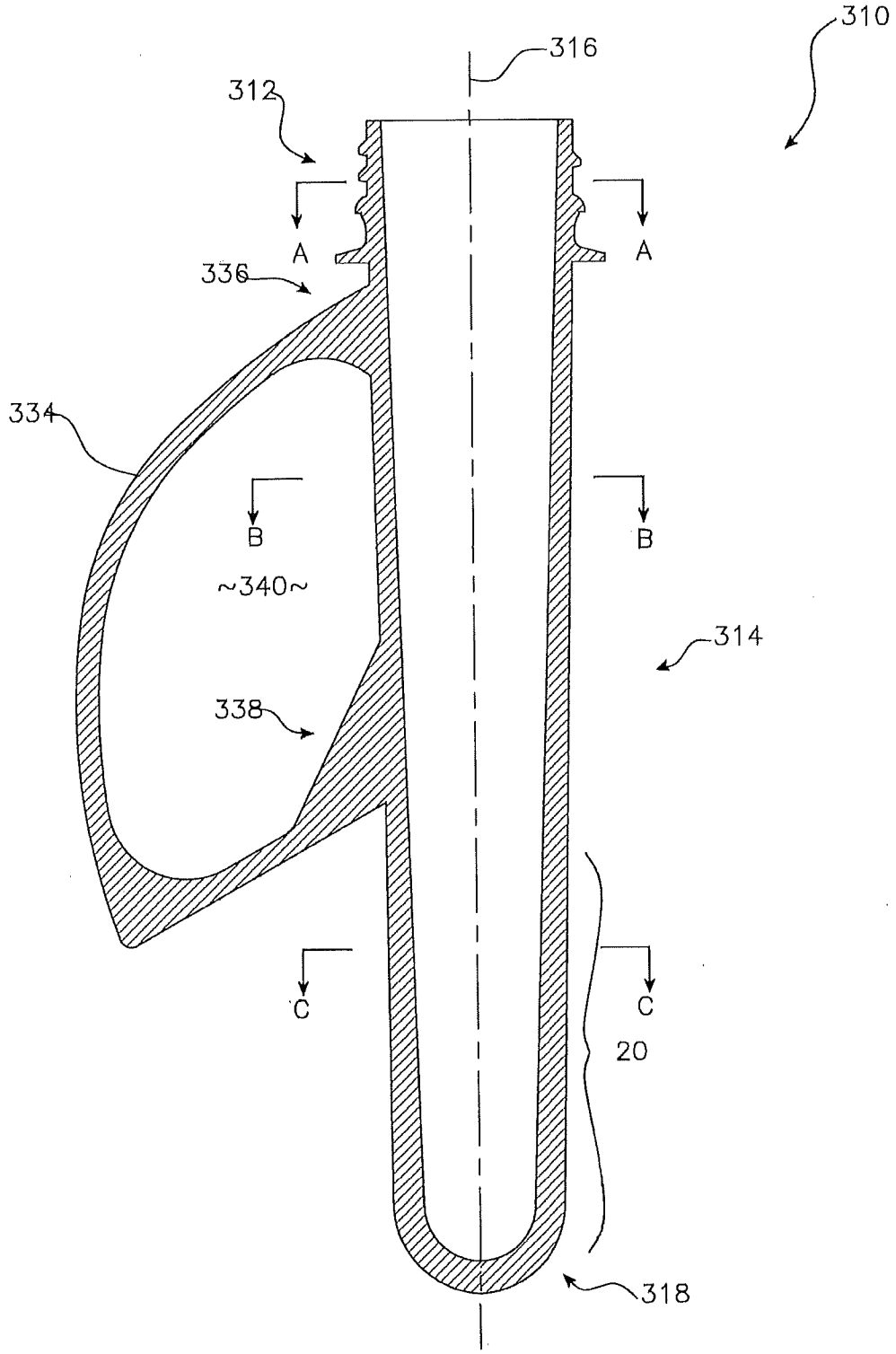

Fig. 13A

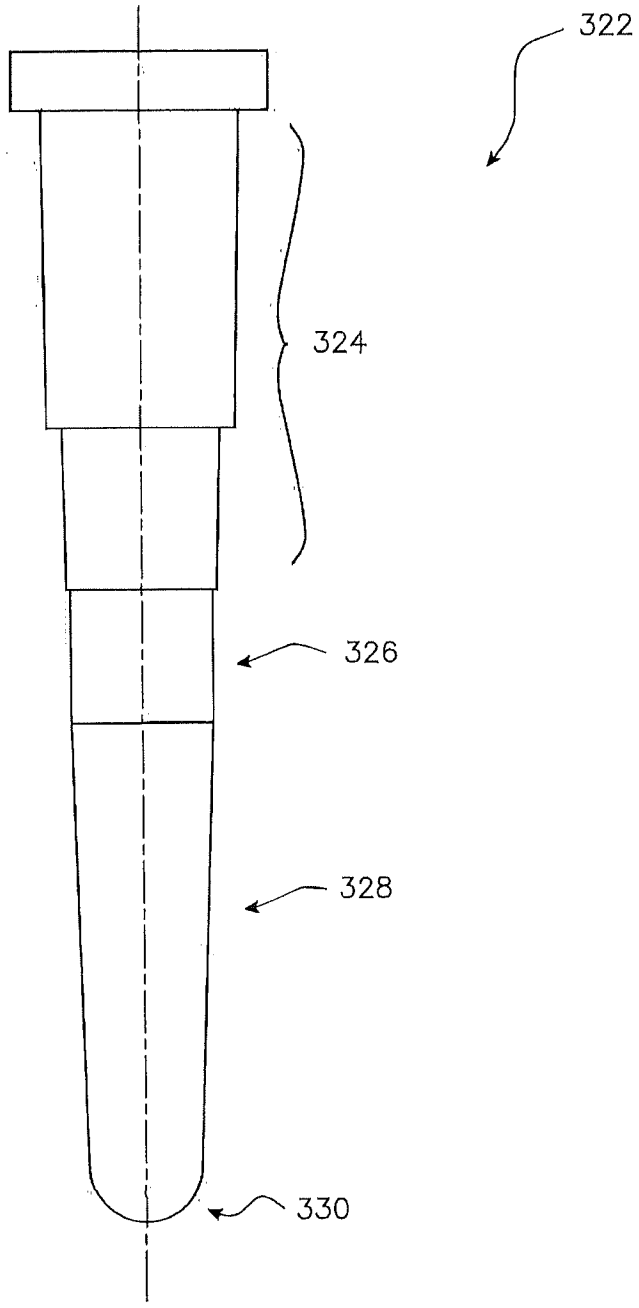

Fig. 14

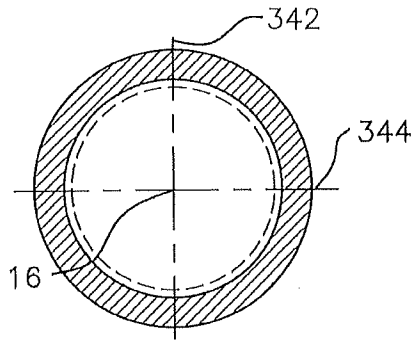

Fig. 15

Section A–A

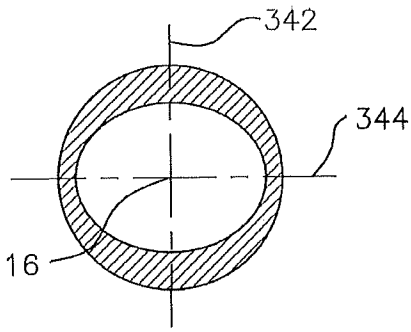

Fig. 16

Section B–B

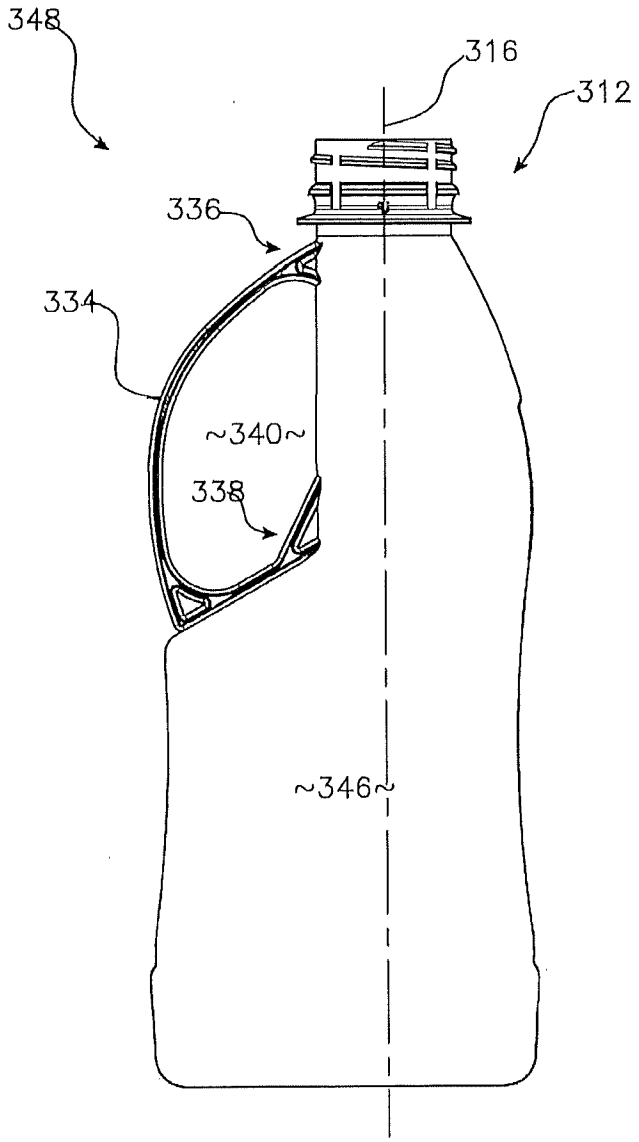

Fig. 17

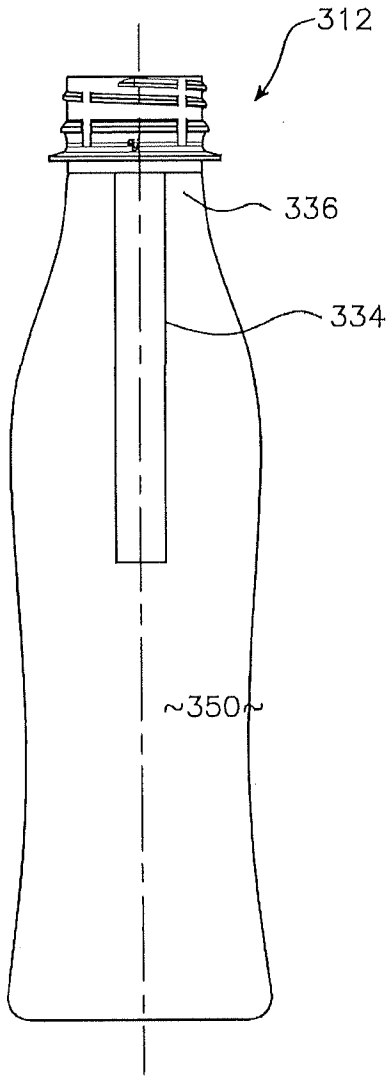

Fig. 18

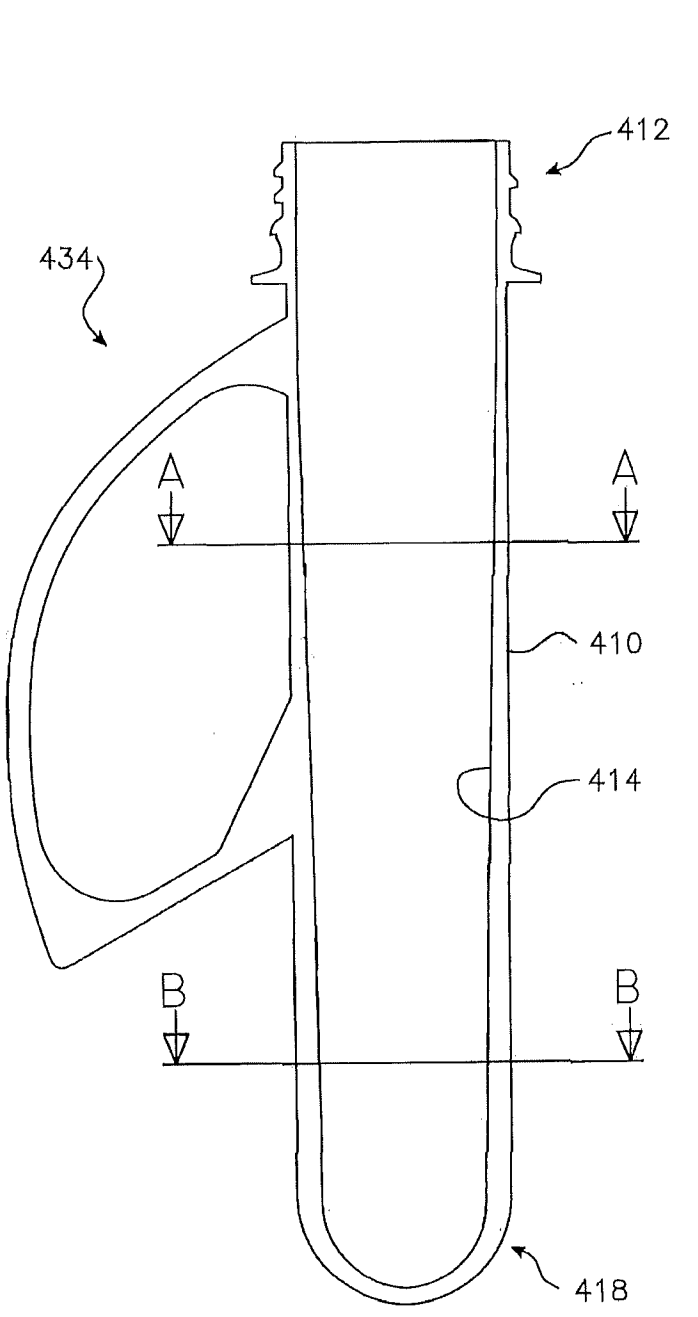

Fig. 19

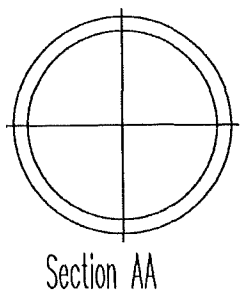

Fig. 19A

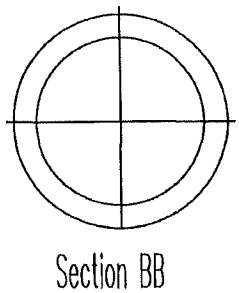

Fig. 19B

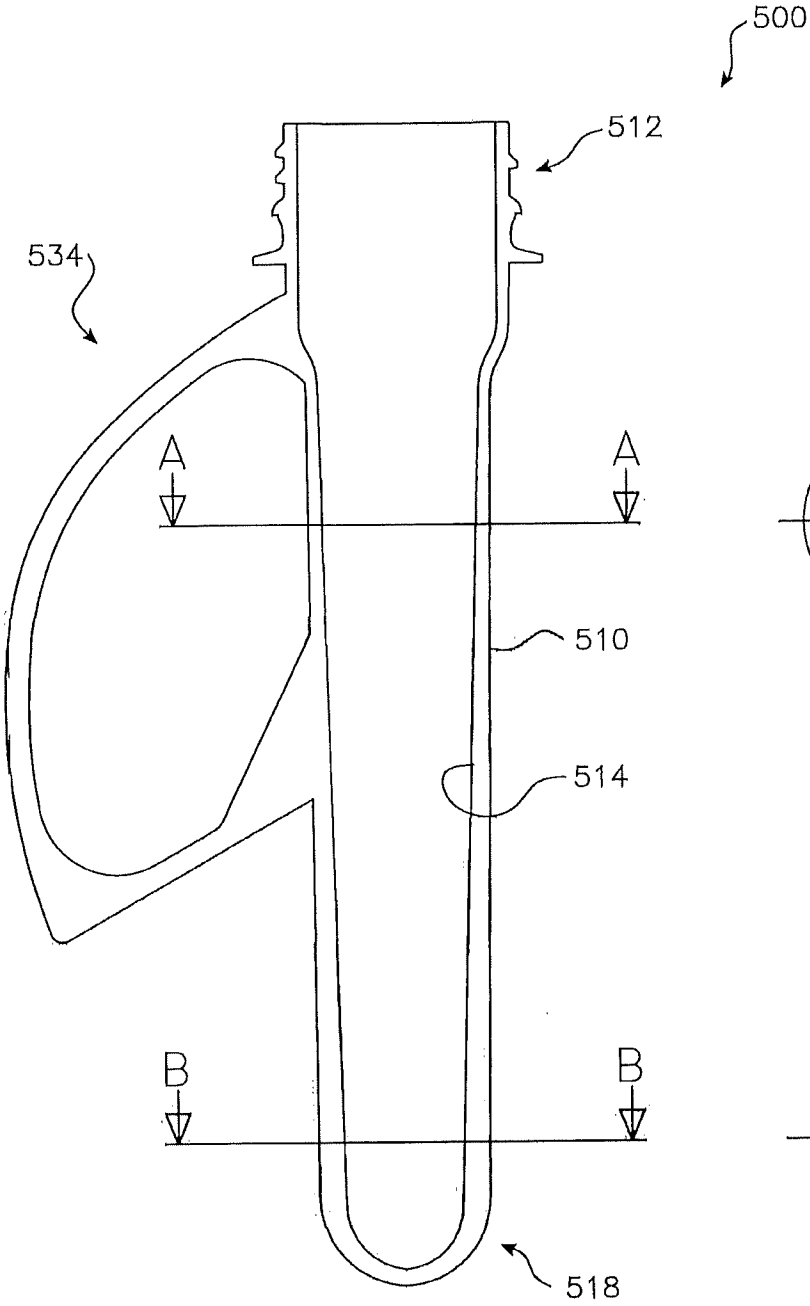

Fig. 20

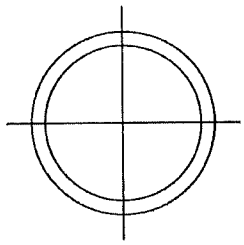

Fig. 20A

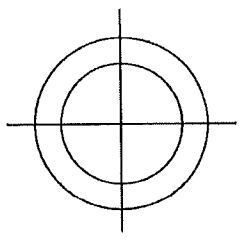

Fig. 20B

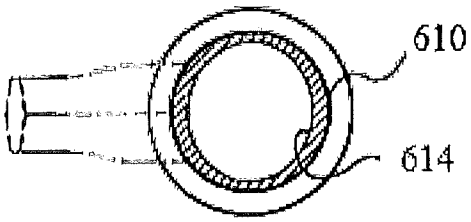

Section A–A Fig. 21A

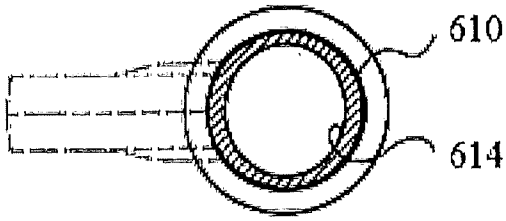

Section B–B Fig. 21B

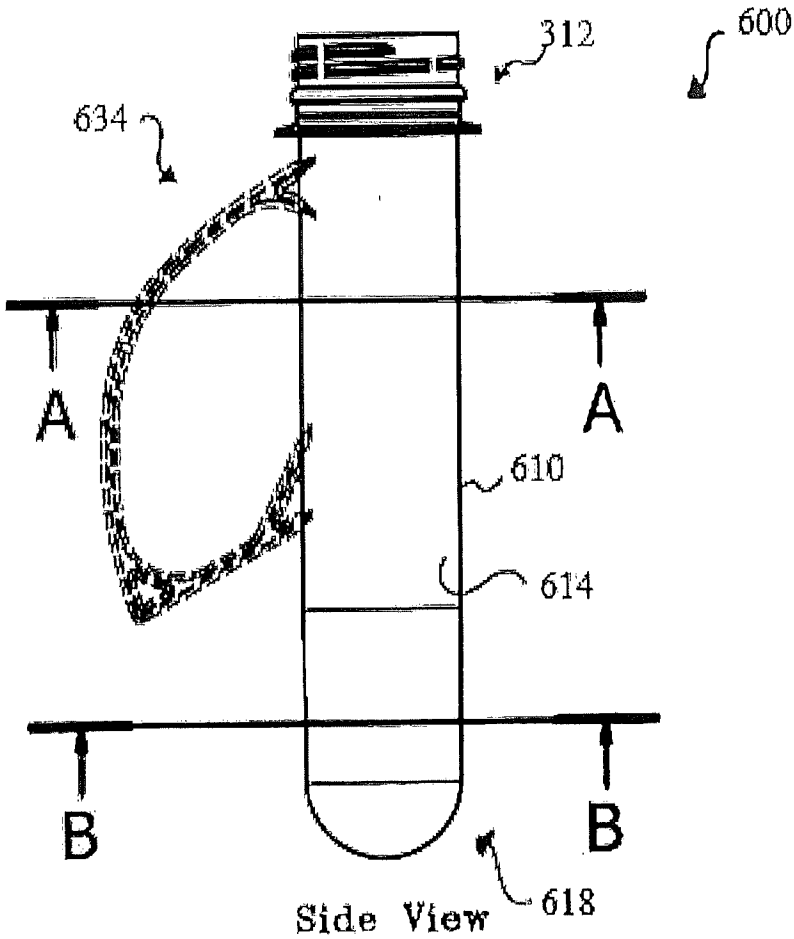

Side View

Fig. 21

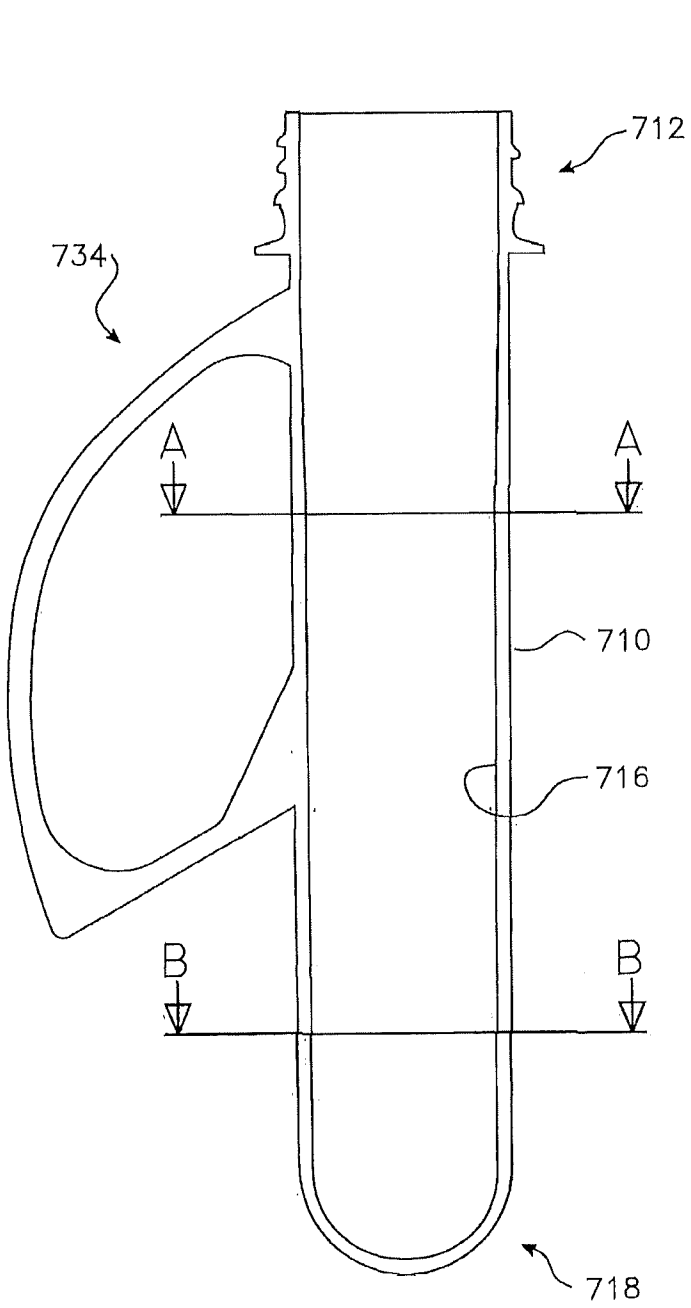

Fig. 22

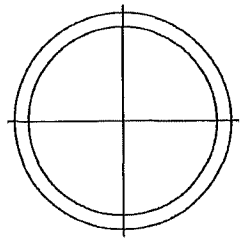

Fig. 22A

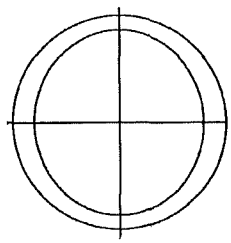

Fig. 22B

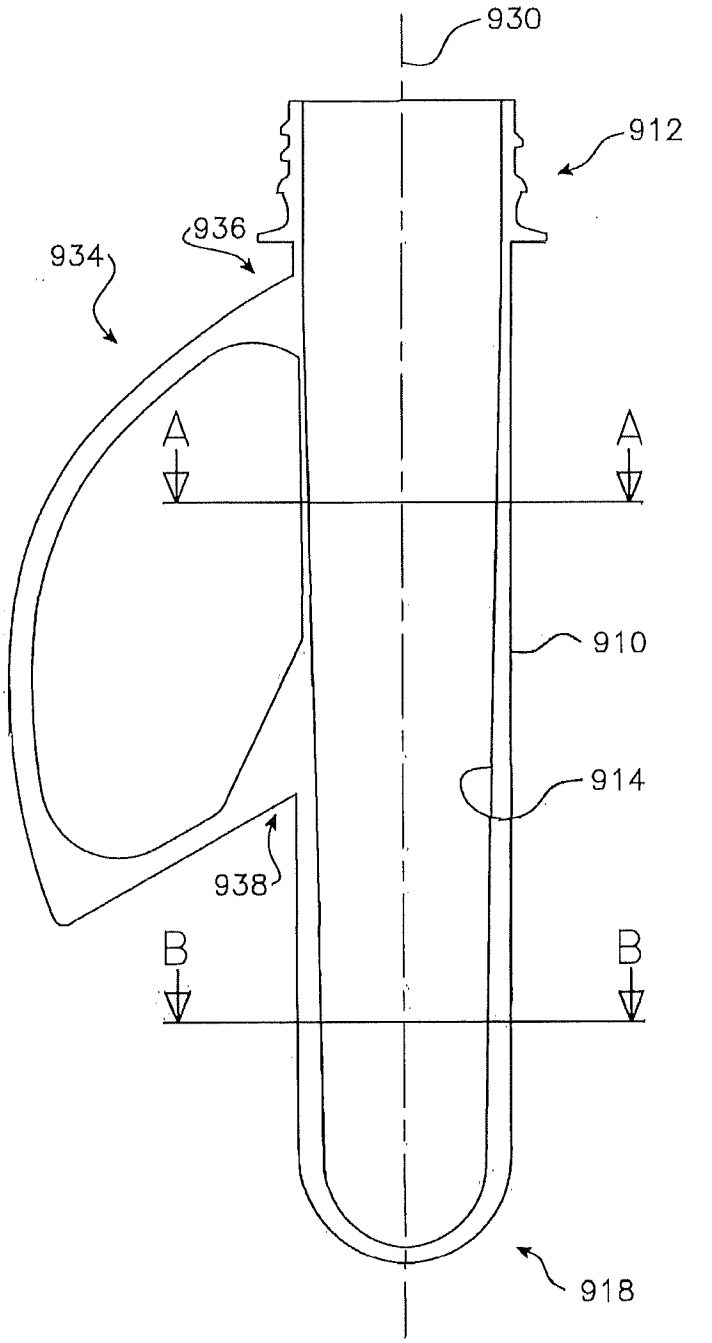

Fig. 23

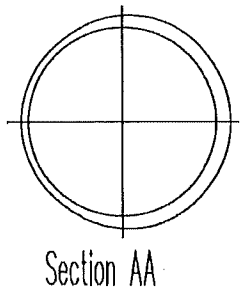

Fig. 23A

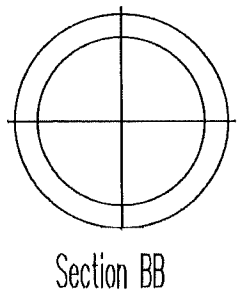

Fig. 23B

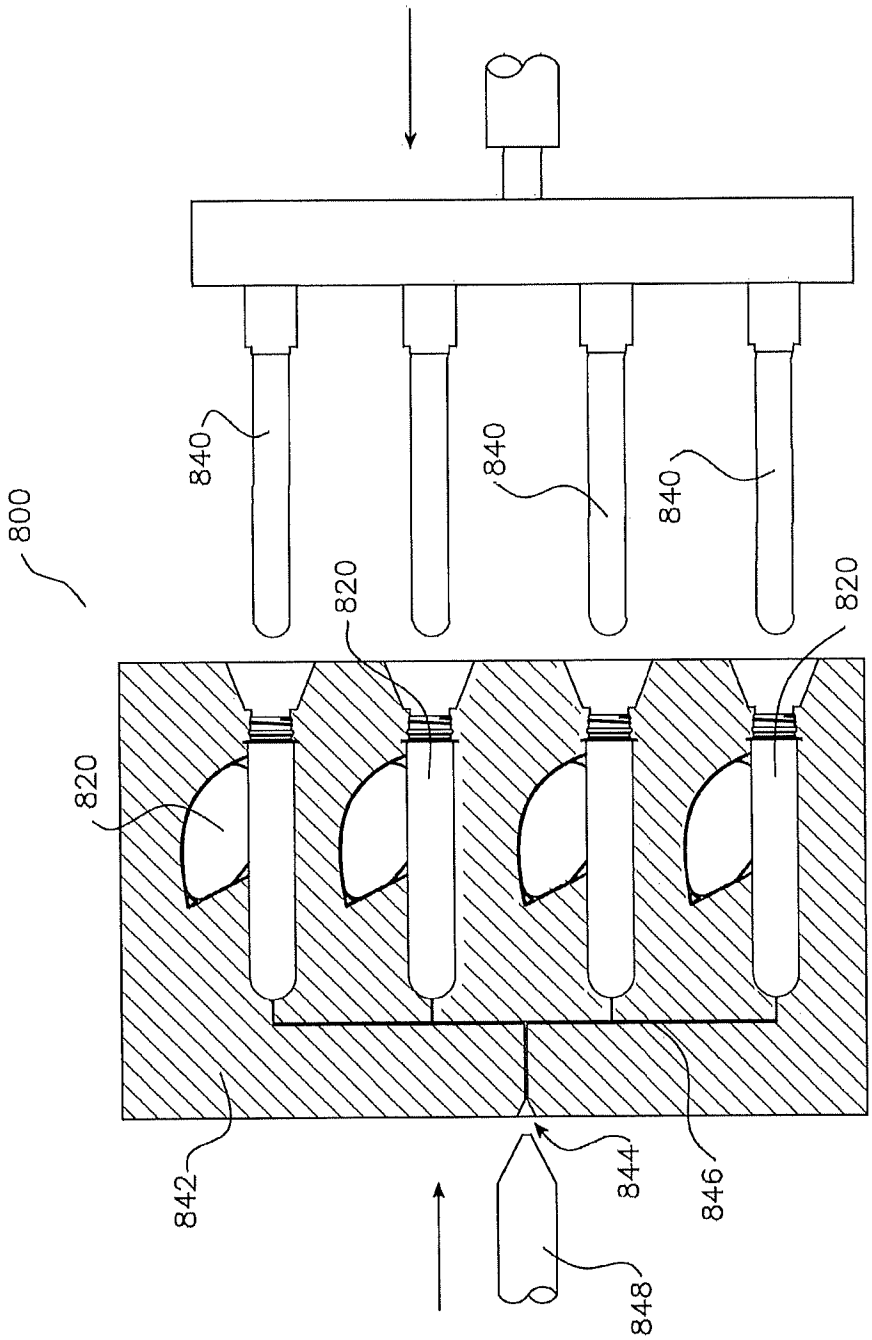

Fig. 24

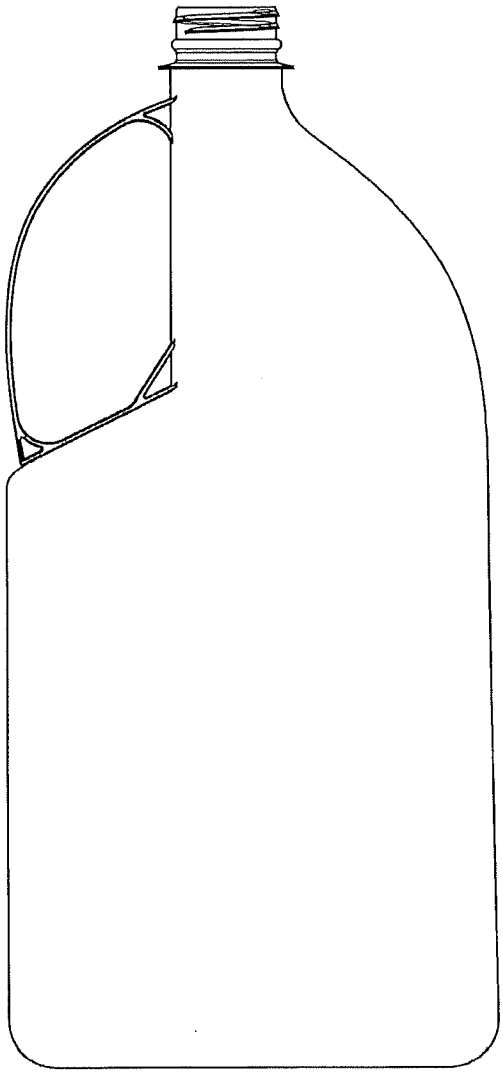

Fig. 25

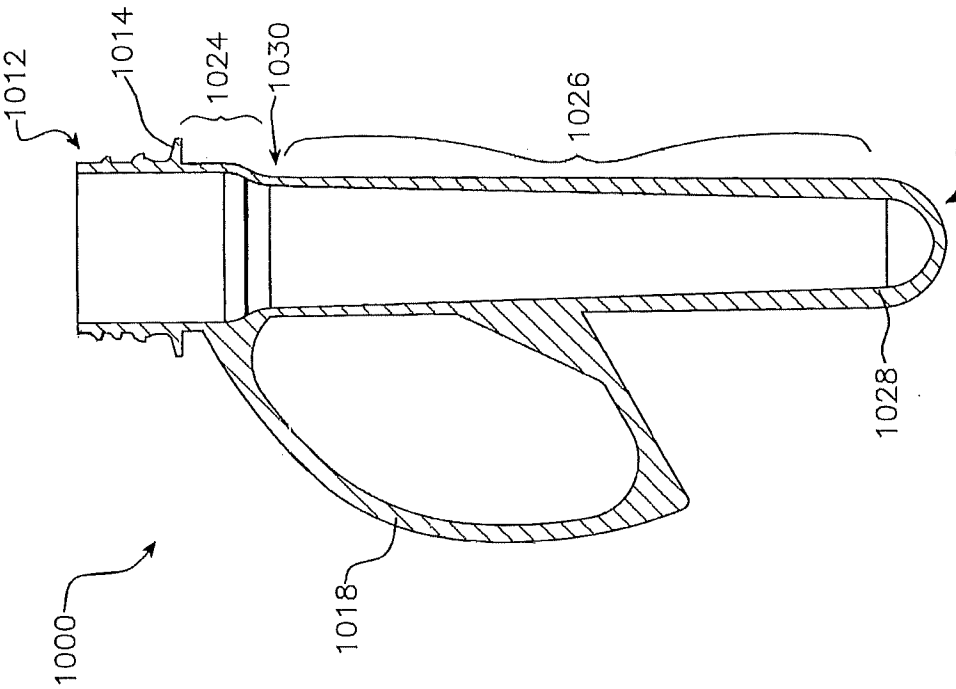
1012
1014
1024
1030
1026
1030
1028
1018
1000

Fig. 27

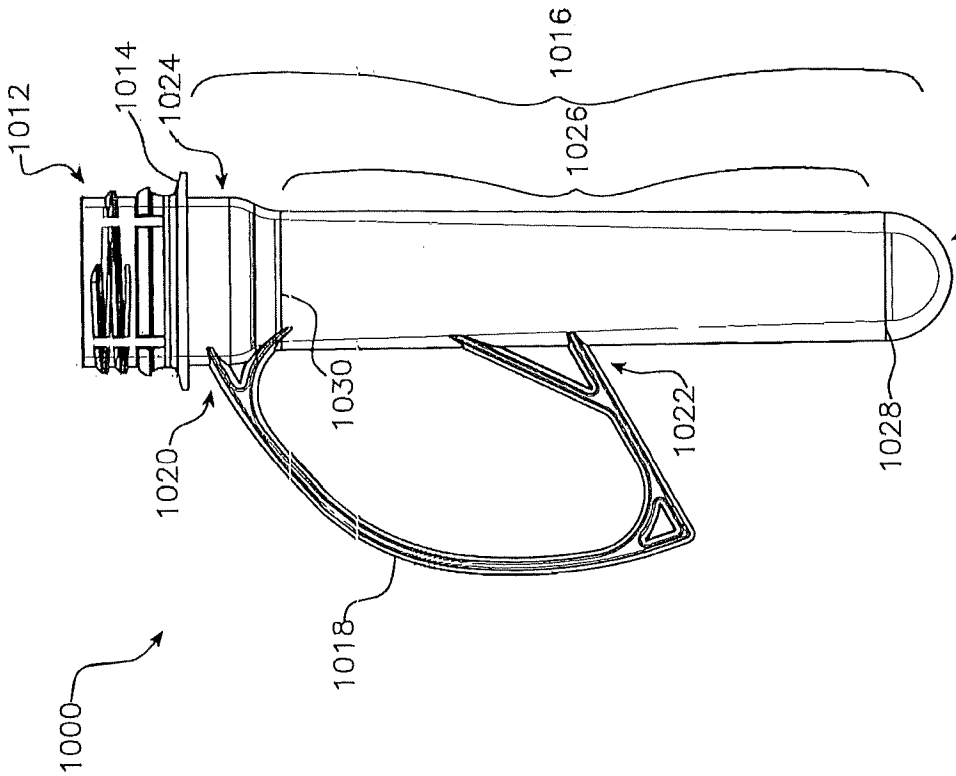
1012
1014
1024
1016
1026
1032
1030
1022
1028
1020
1018
1000

Fig. 26

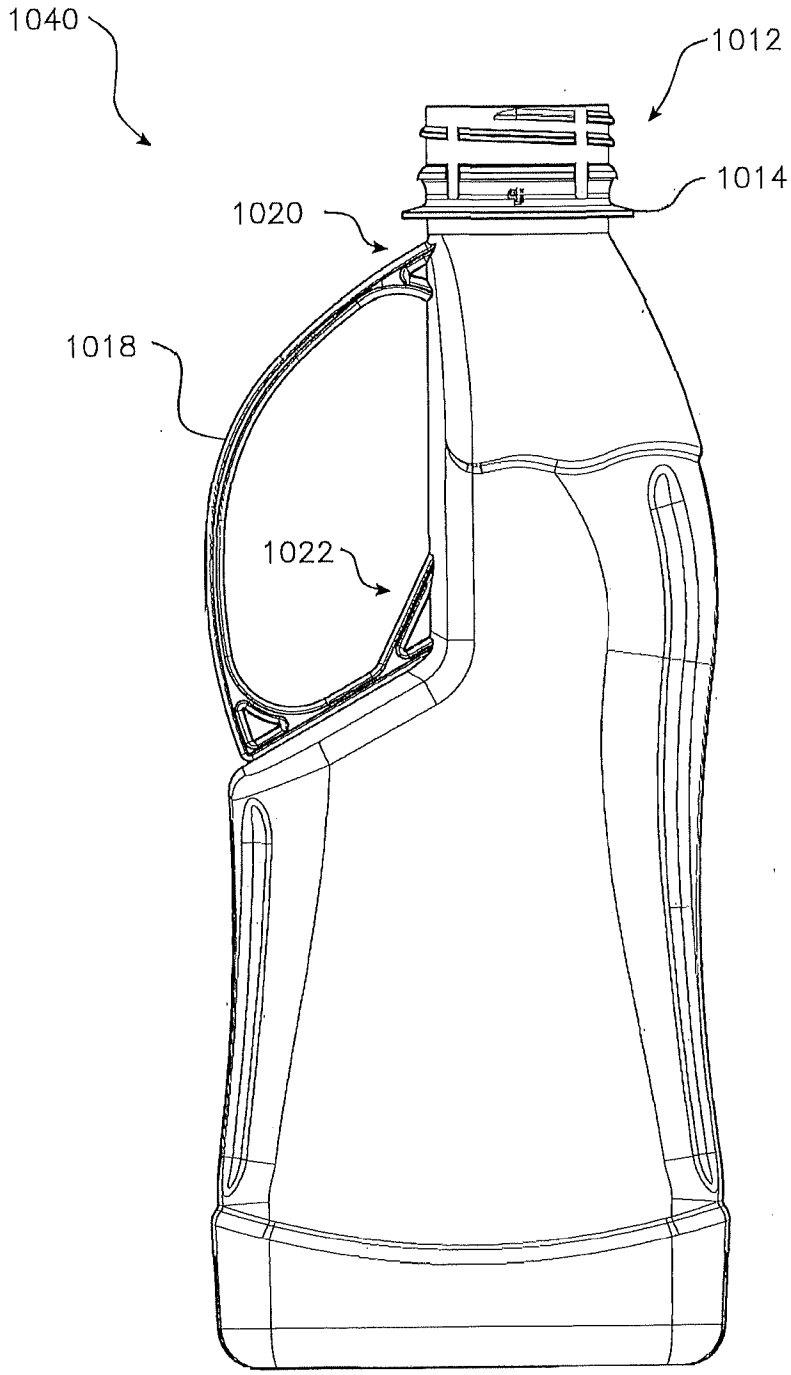

Fig. 28

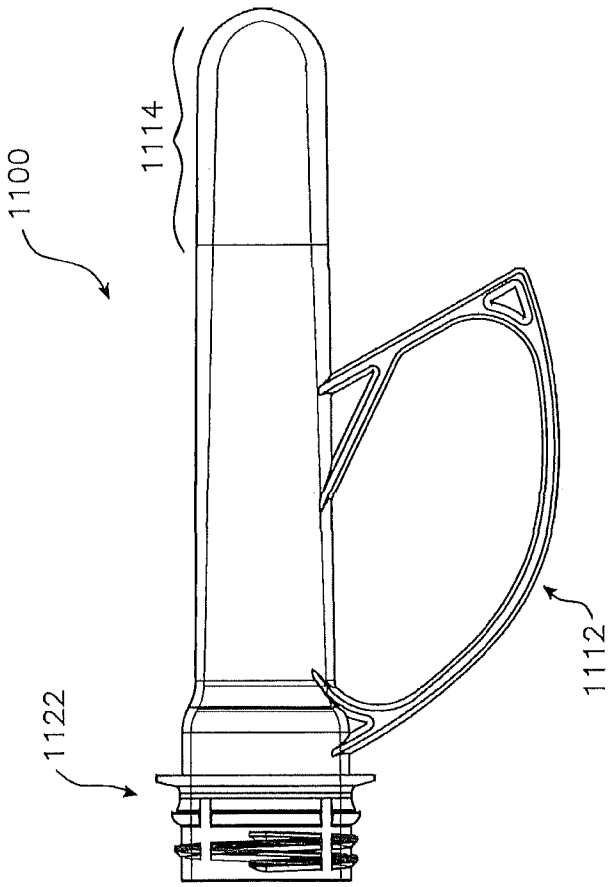

Fig. 29

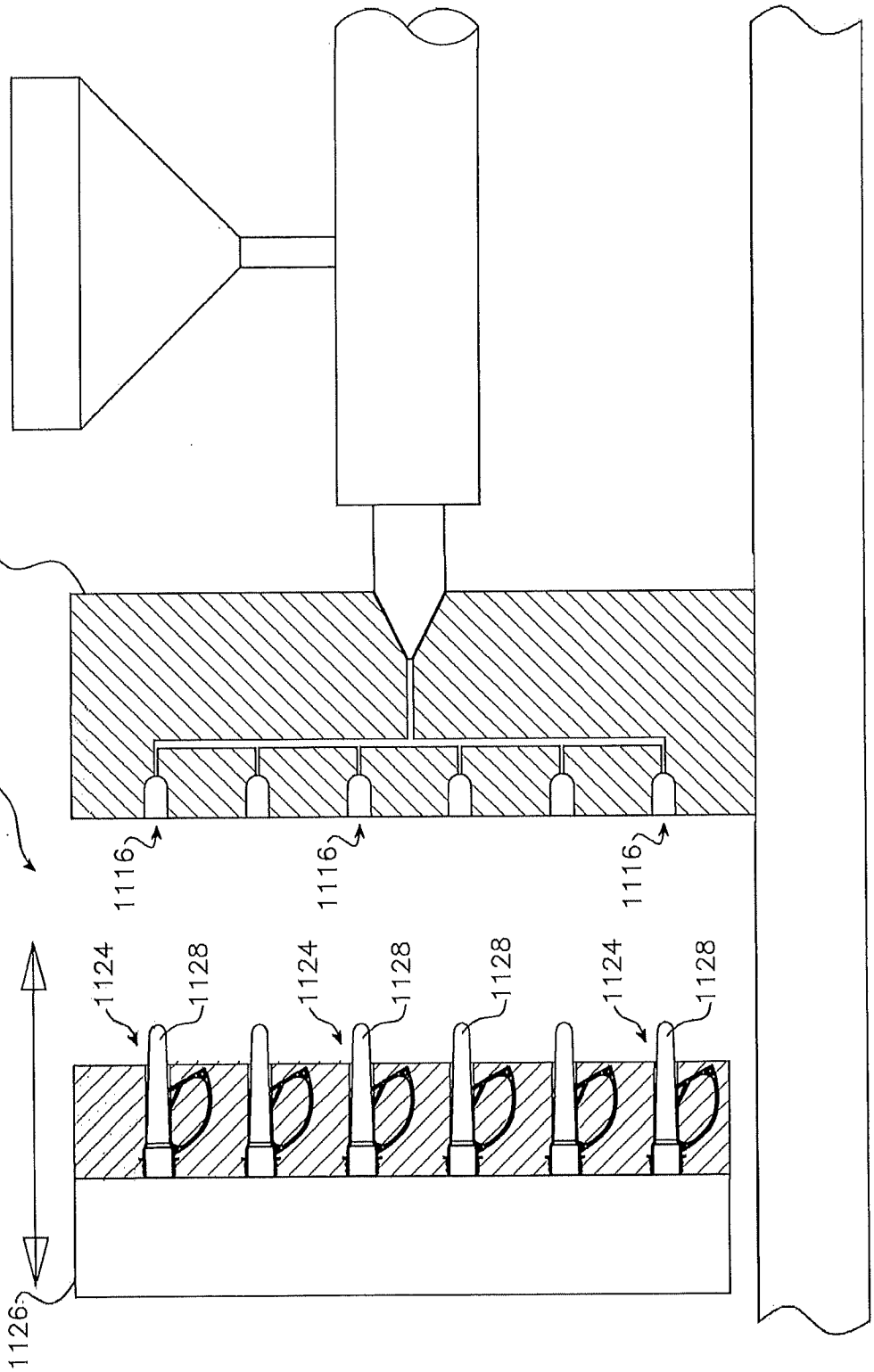
1118
1120
1116
1116
1116
1124
1128
1124
1128
1128
1124
1128
1126

Fig. 30

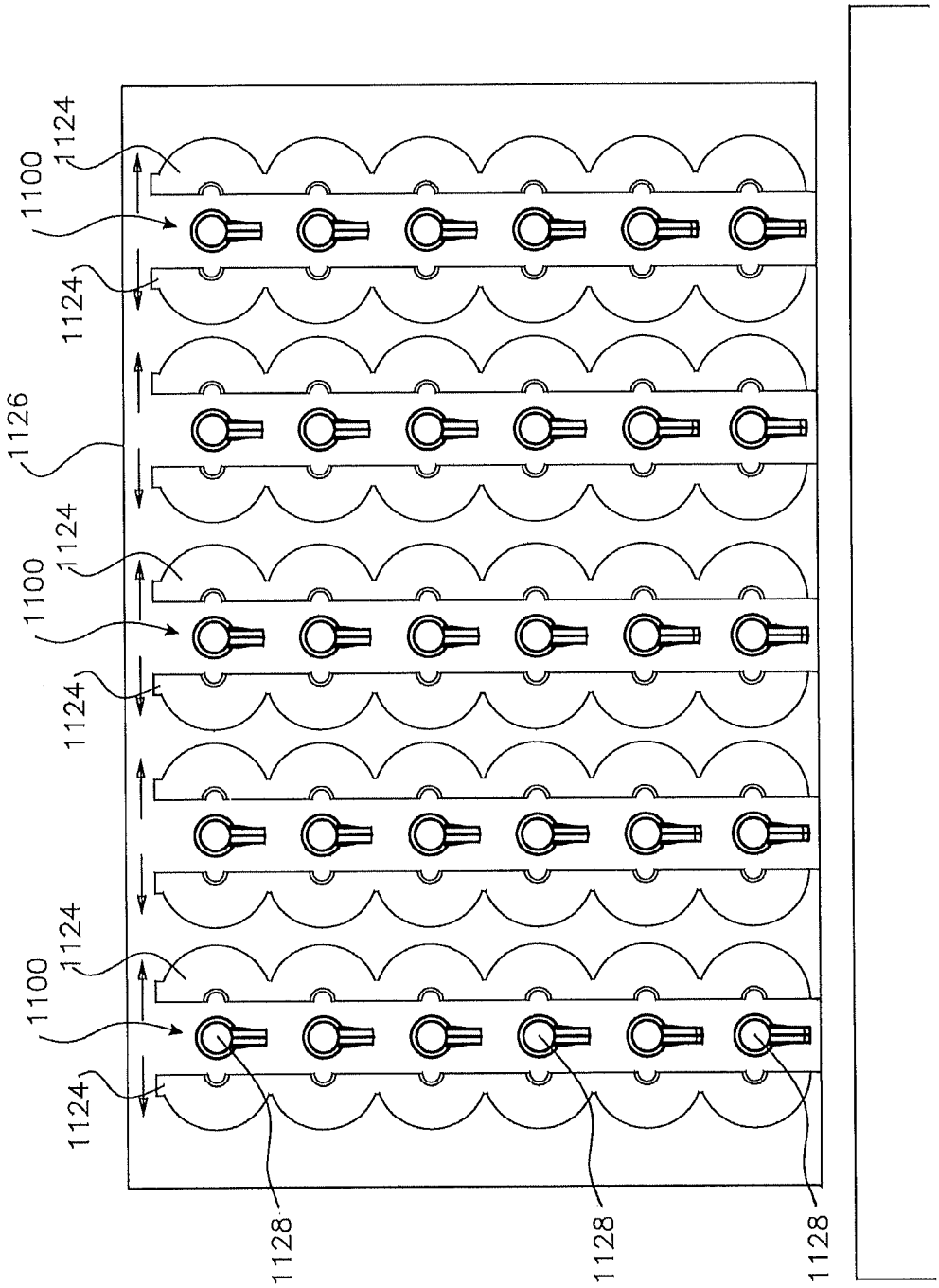

Fig. 31

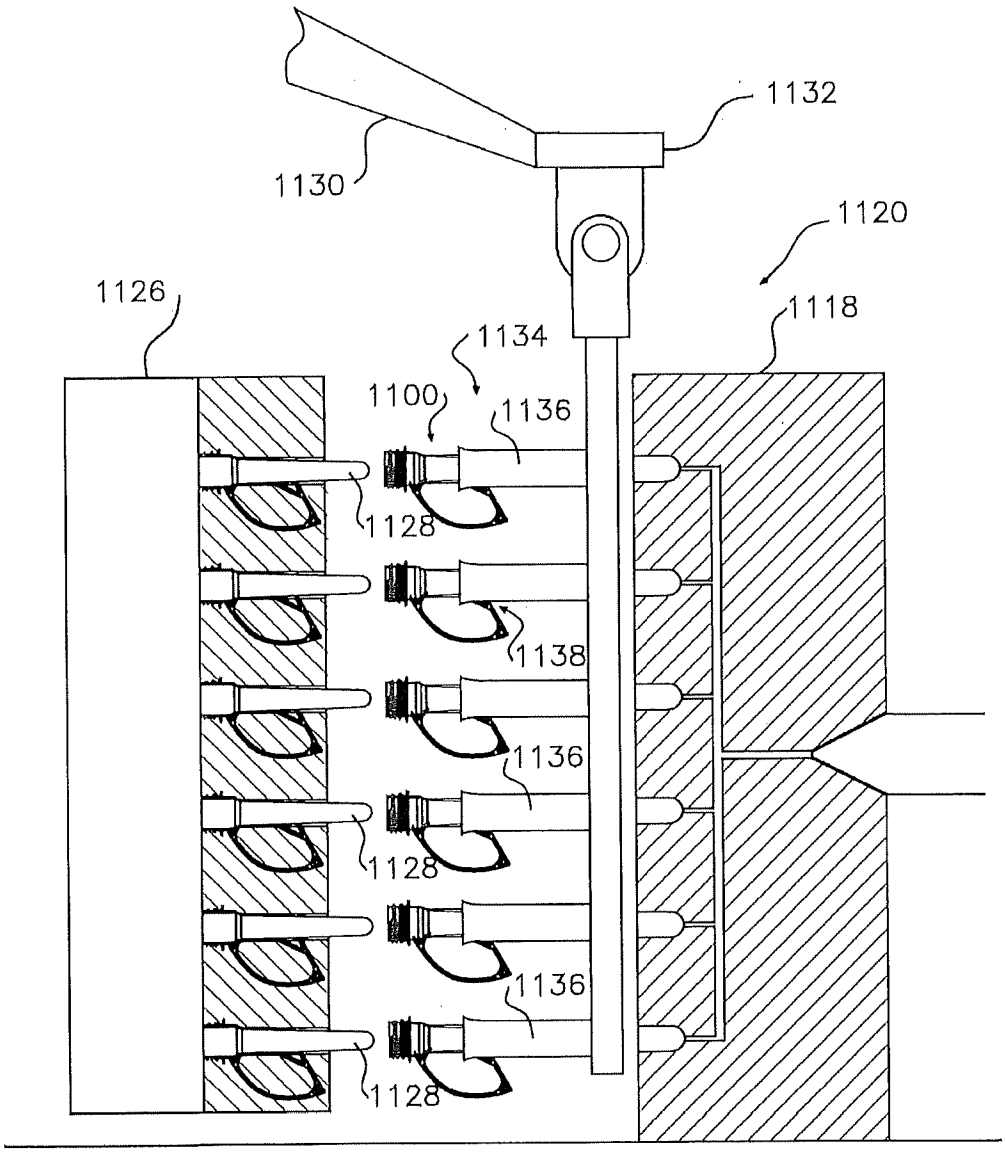
1132
1130
1120
1126
1118
1134
1100
1136
1128
1138
1136
1128
1136
1128

Fig. 32

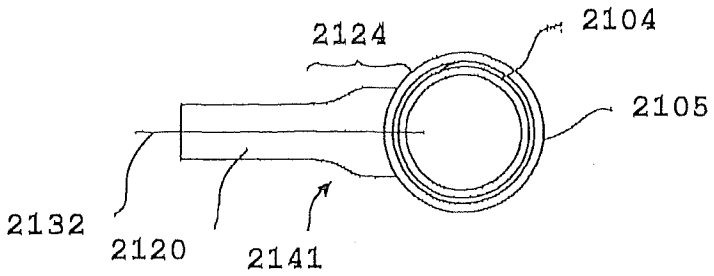

Fig. 35

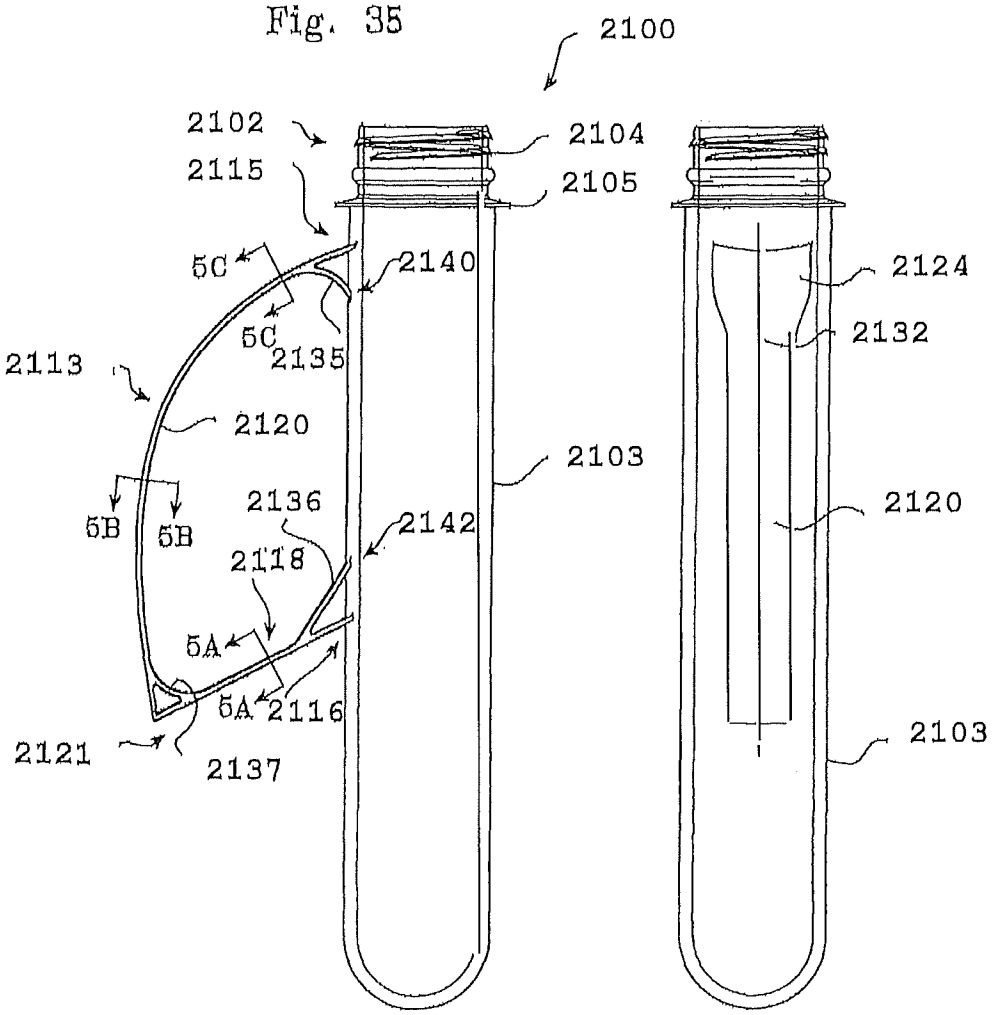

Fig. 33

Fig. 34

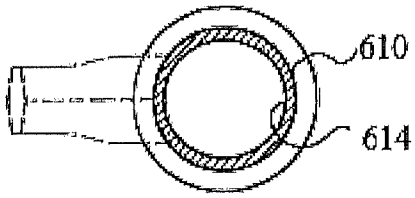

Section A–A Fig. 36A

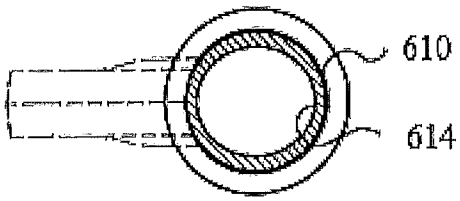

Section B–B Fig. 36B

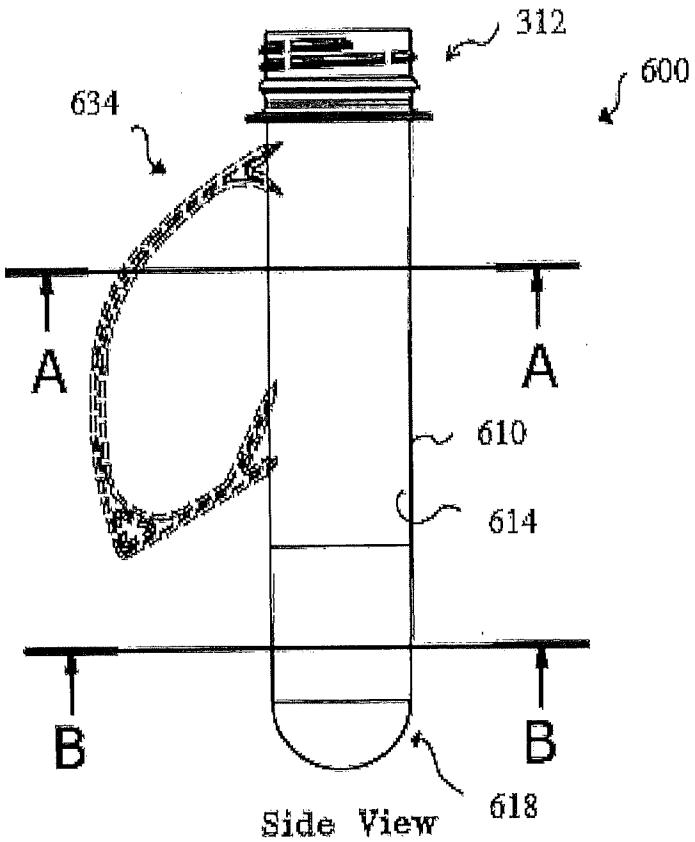

Side View
Fig. 36

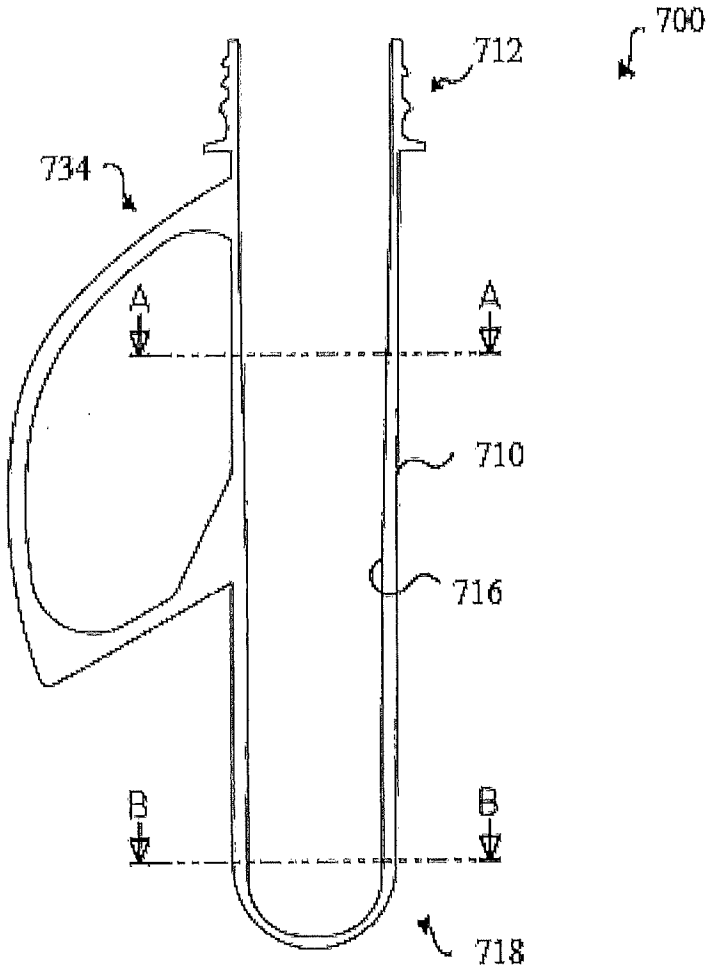

Fig. 37

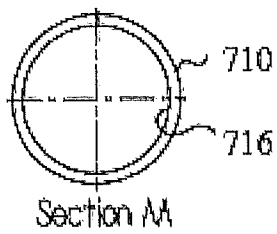

Fig. 37A

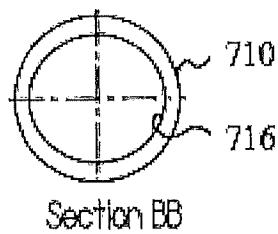

Fig. 37B

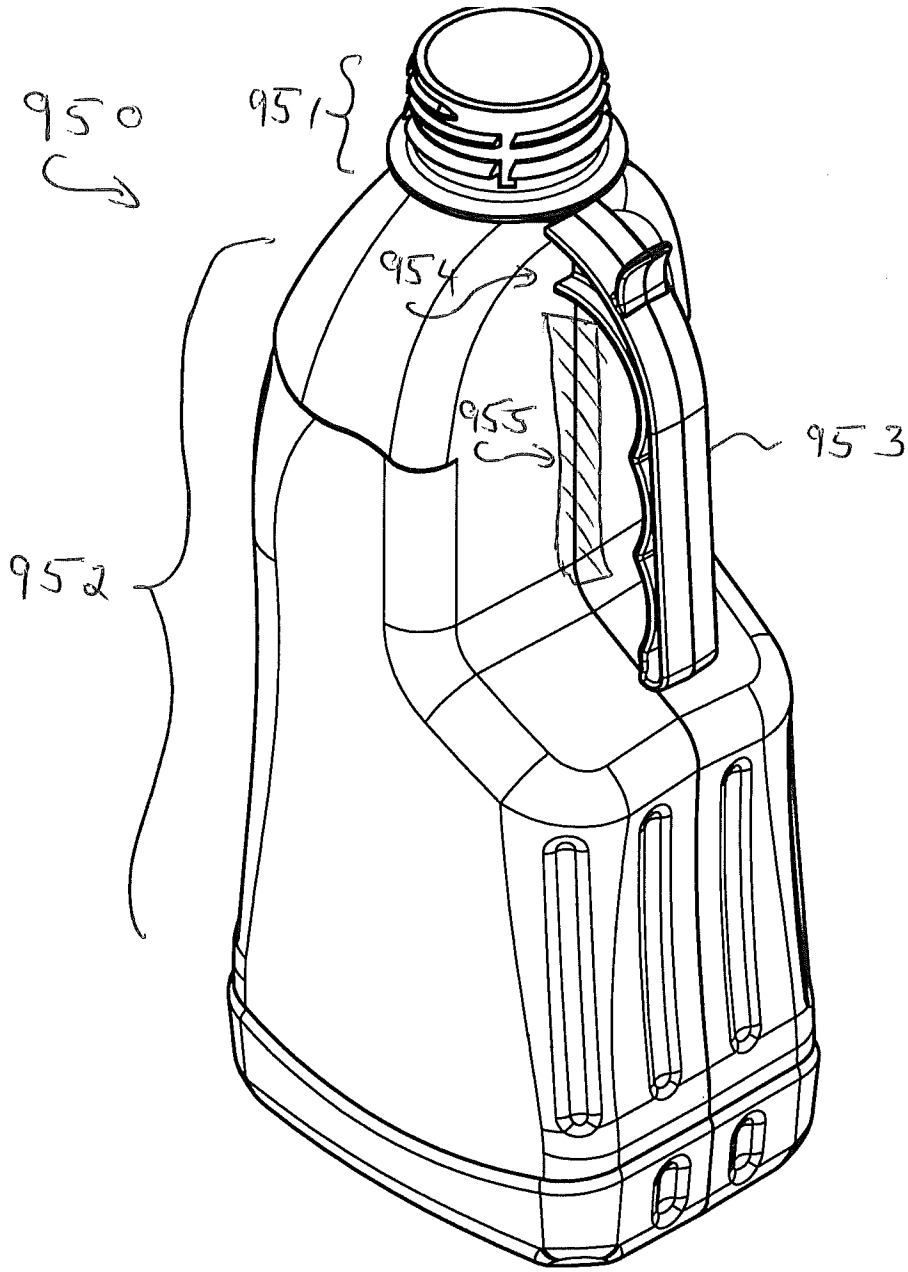

fig 38

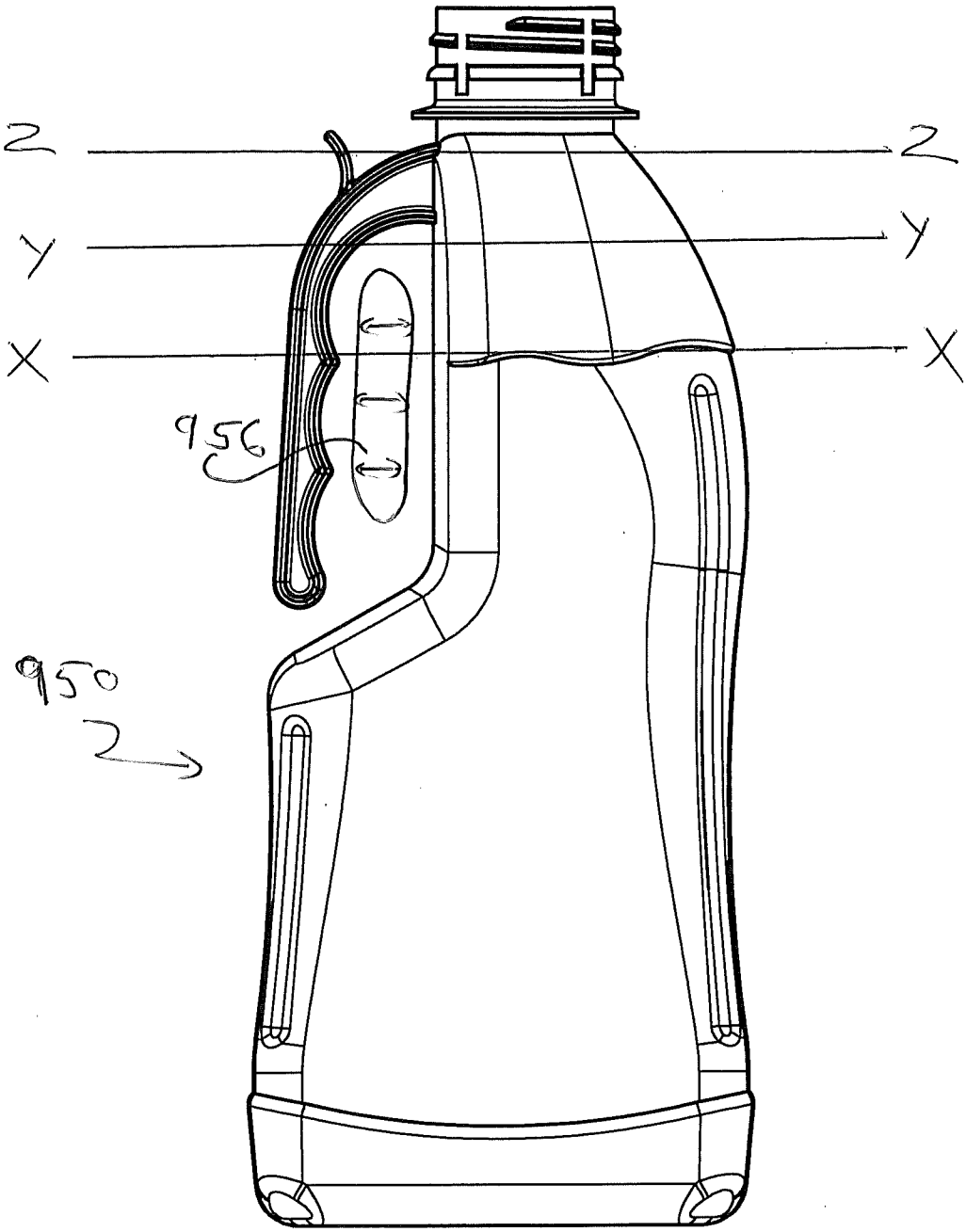

Fig 39

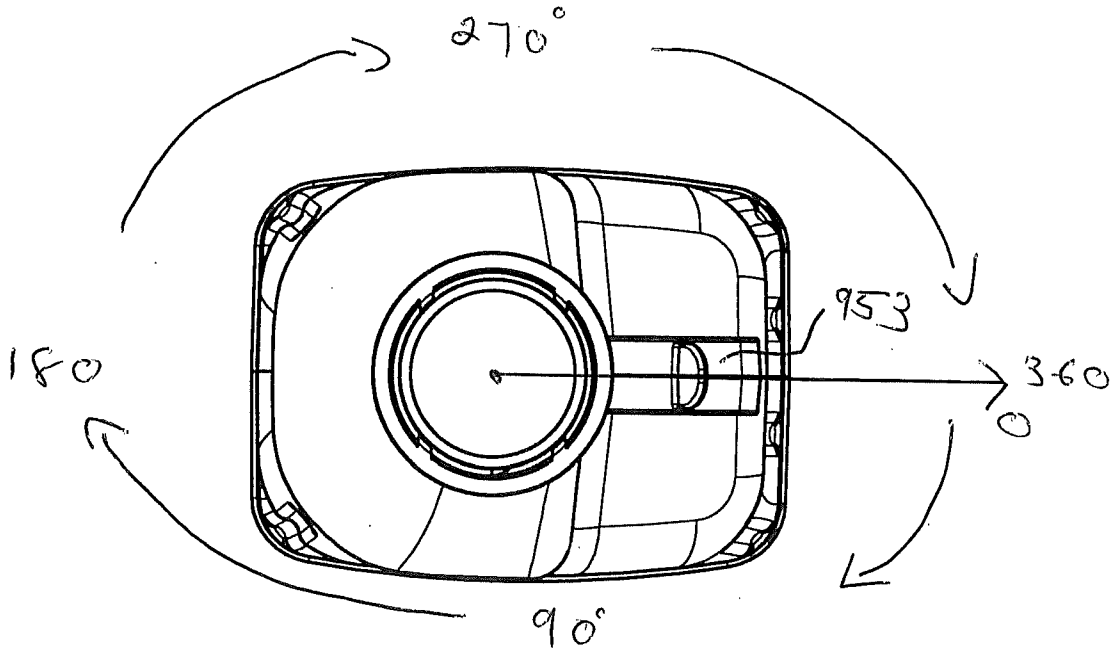

View from Above : Angle Reference

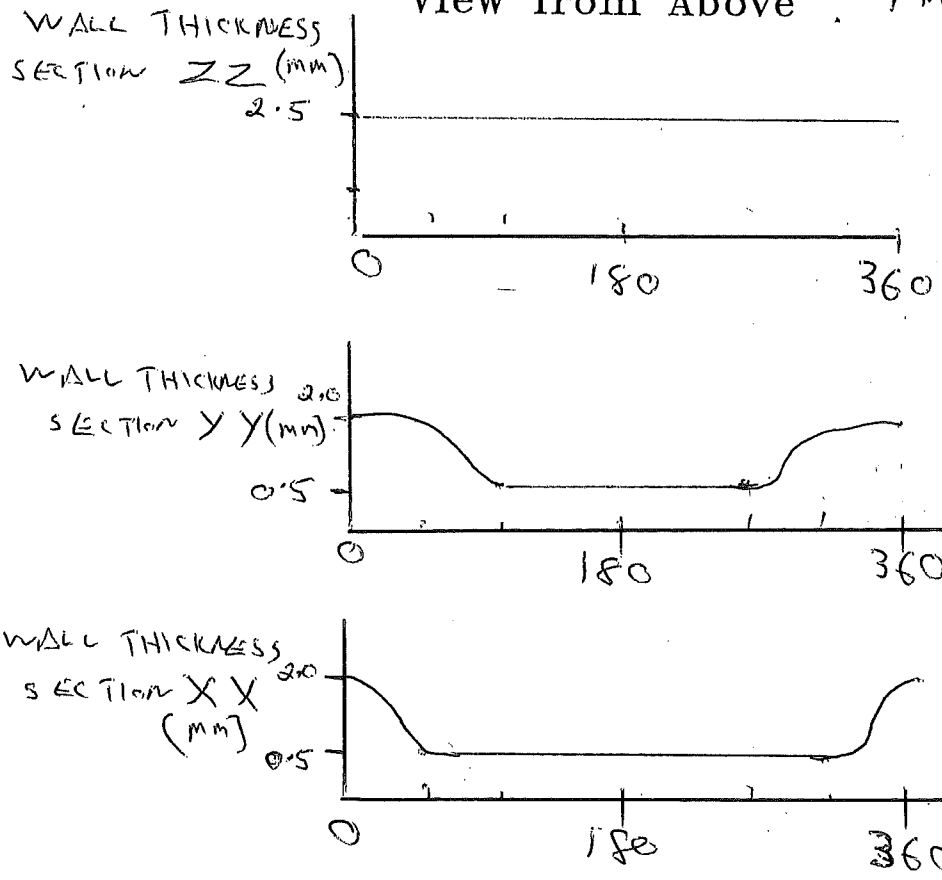

Fig 40

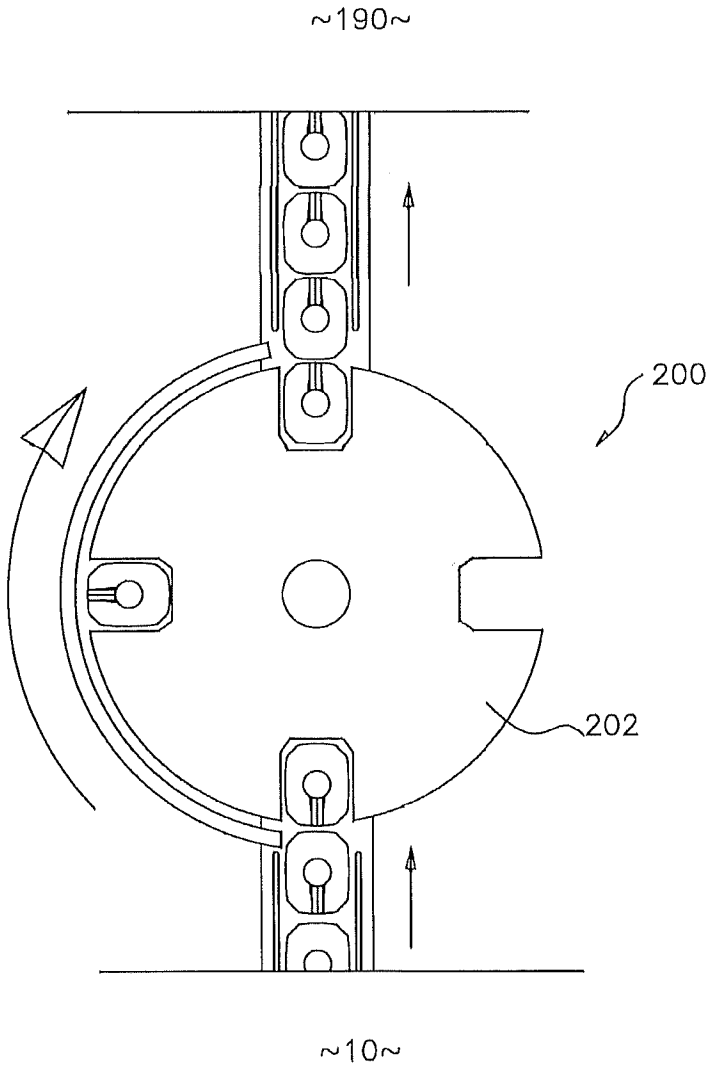

Fig. 41

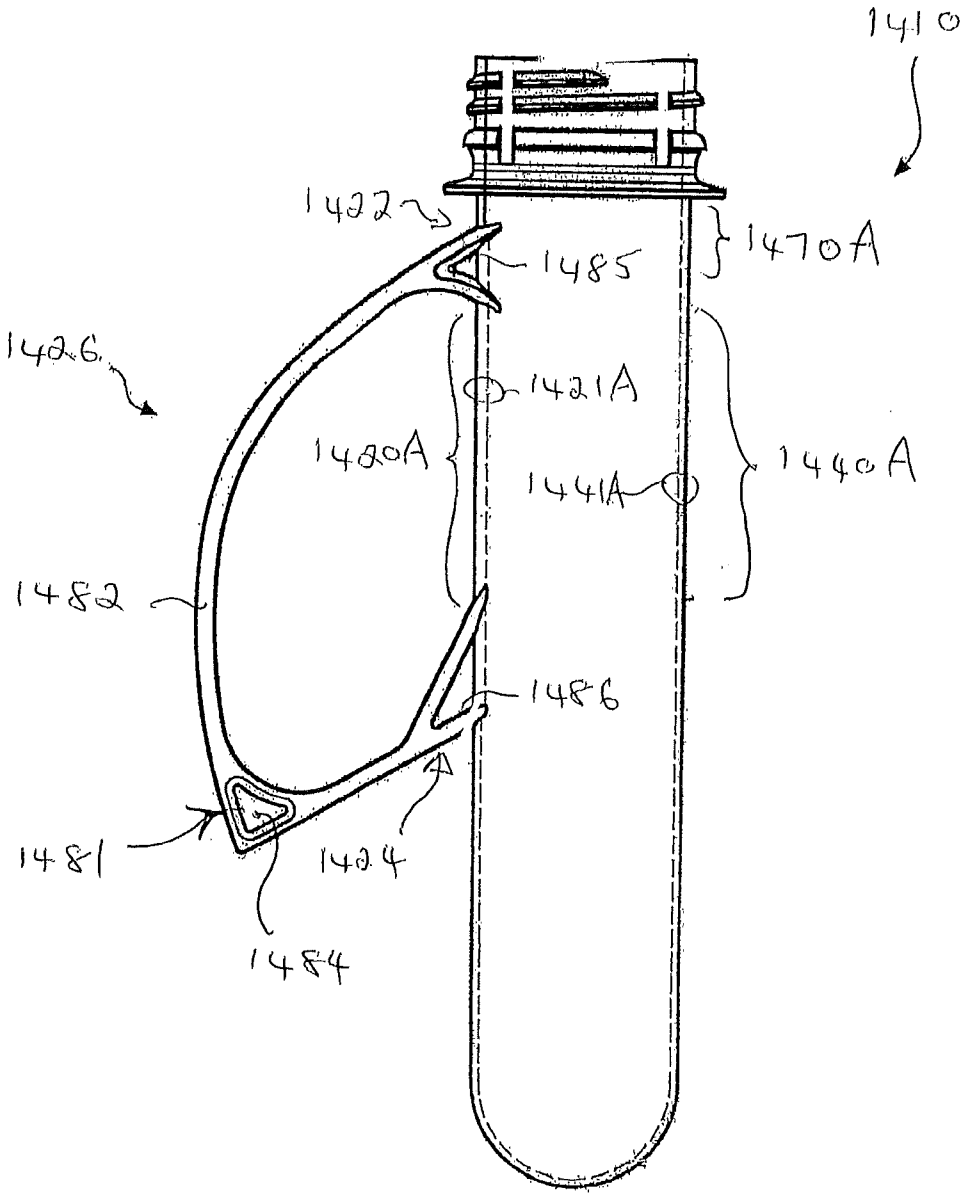
1410
1422
1485
1470A
1426
1421A
1420A
1441A
1440A
1482
1486
1481
1424
1484

Fig. 42

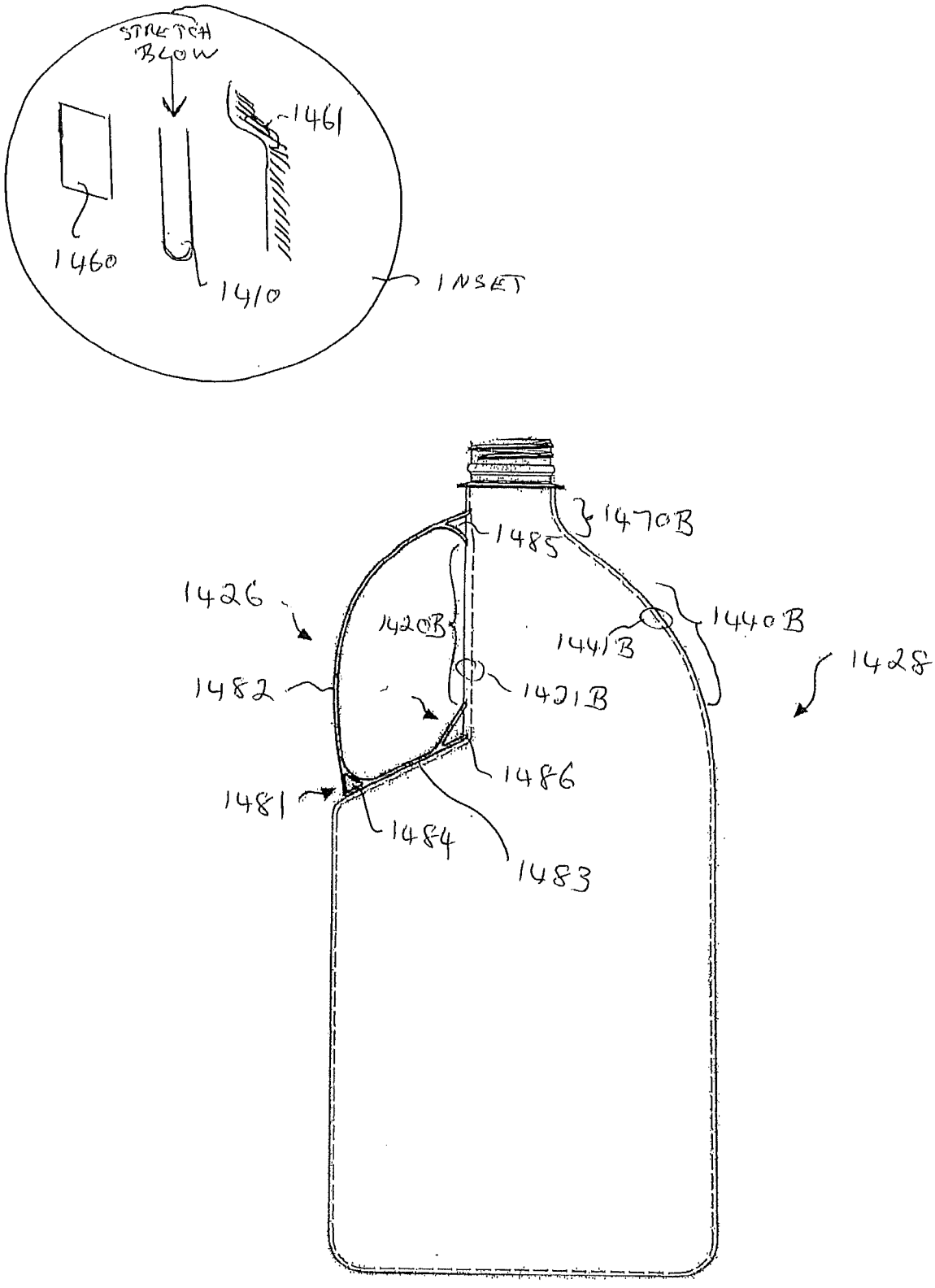
STRETCH
BLOW
1461
1460
1410
INSET
1470B
1485
1426
1420B
1441B
1440B
1428
1482
1431B
1486
1481
1484
1483

Fig. 43

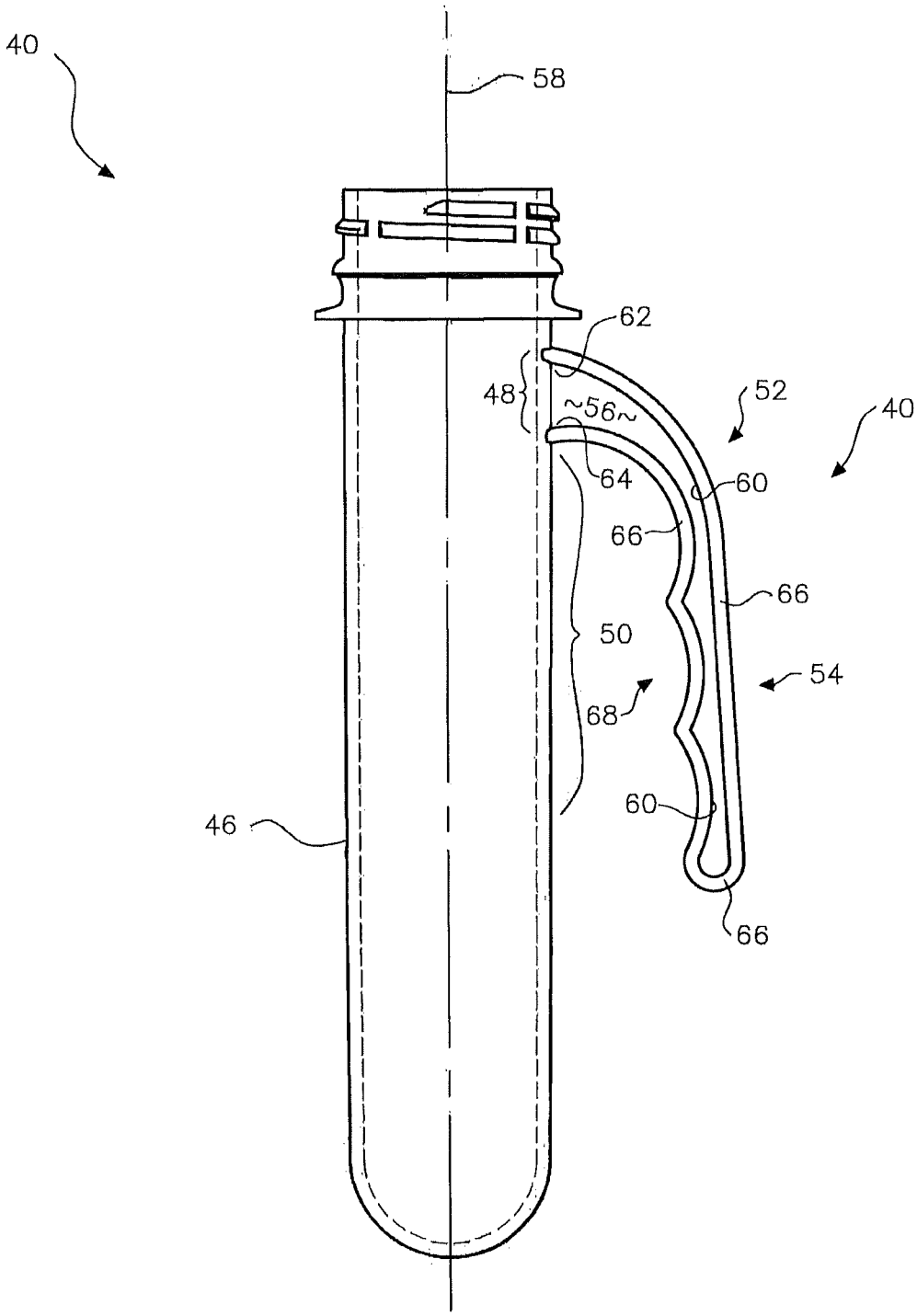

Fig. 44

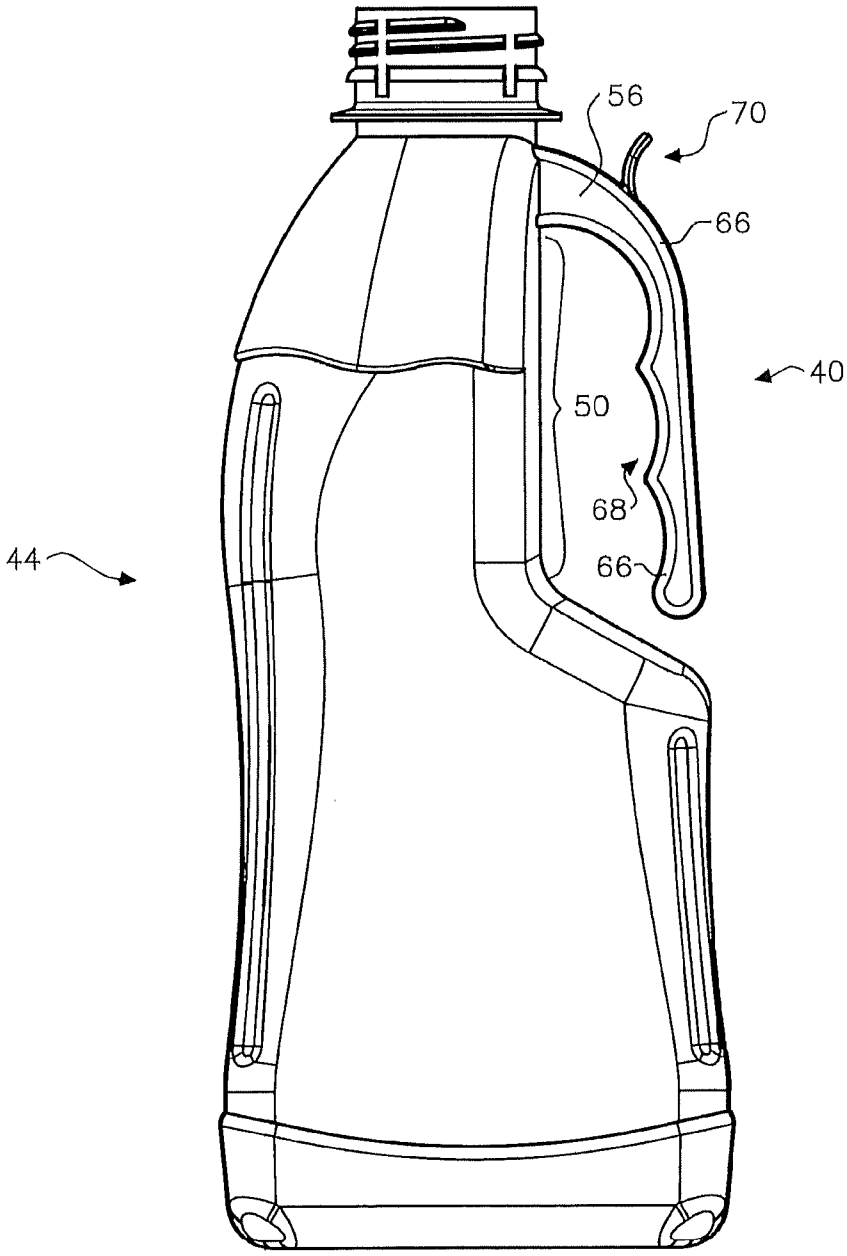

Fig. 45

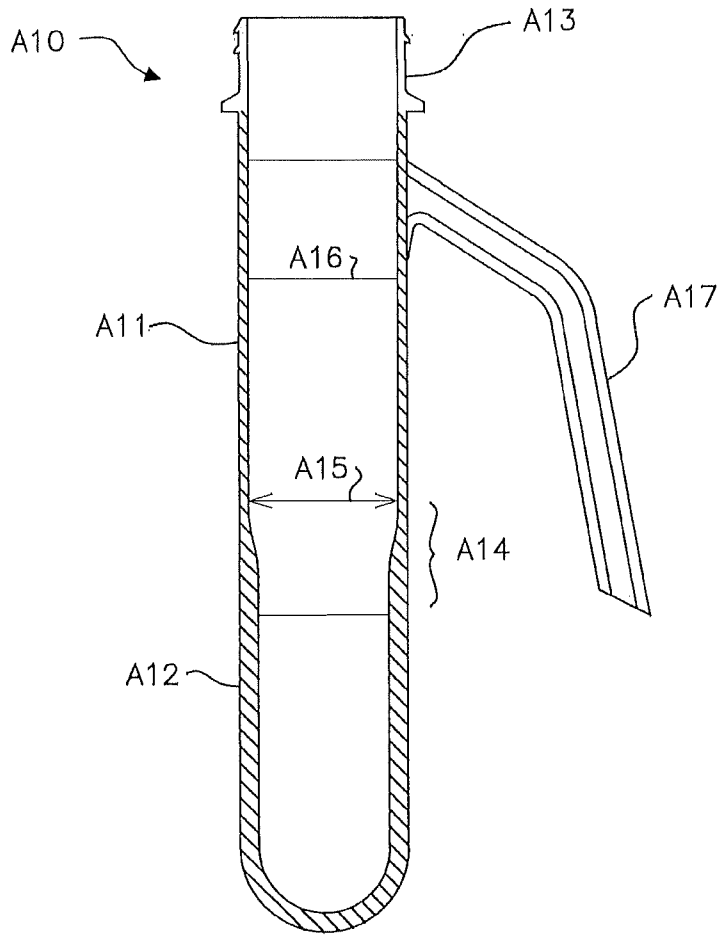

Fig. 46

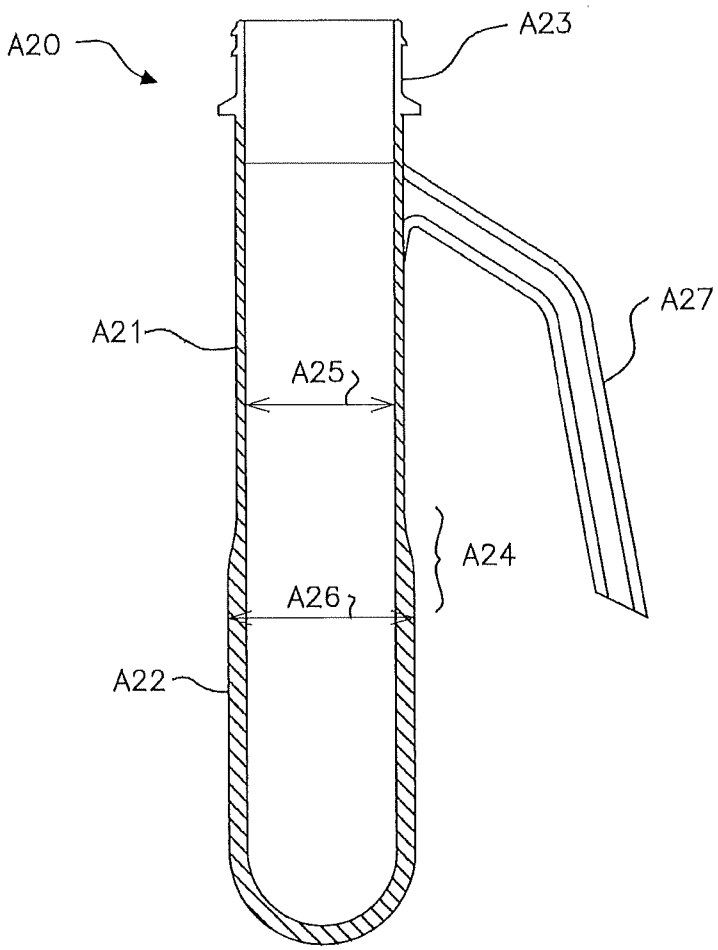

Fig. 47

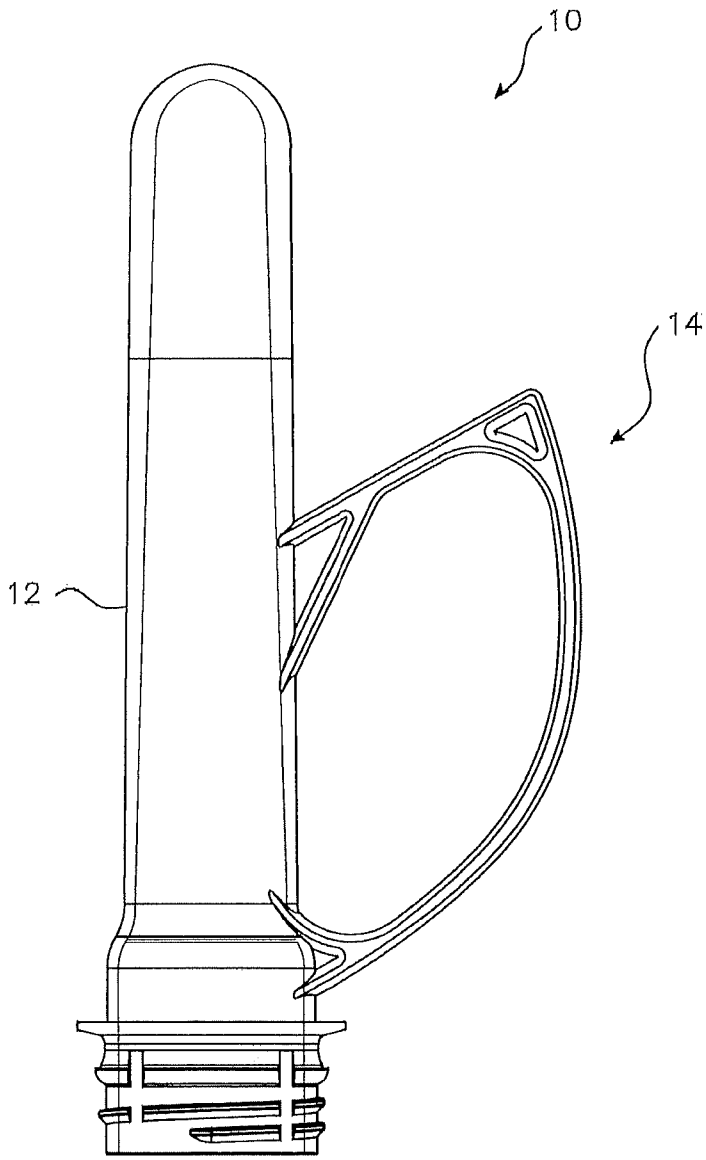

Fig. 48

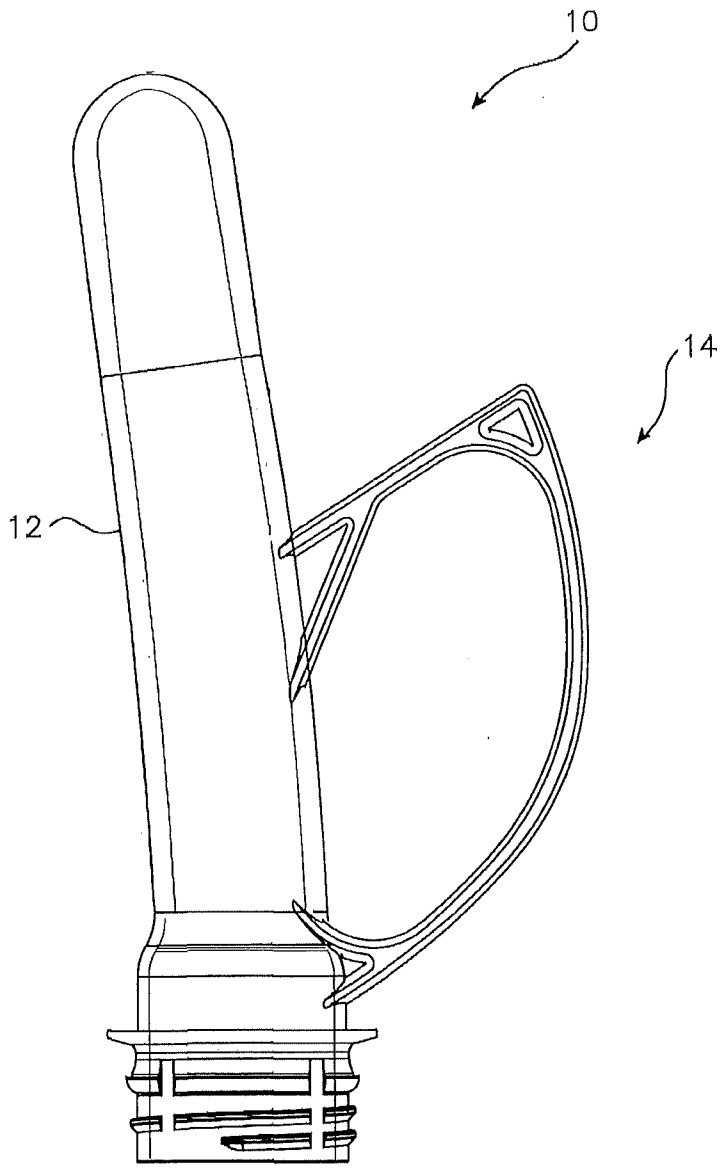

Fig. 49

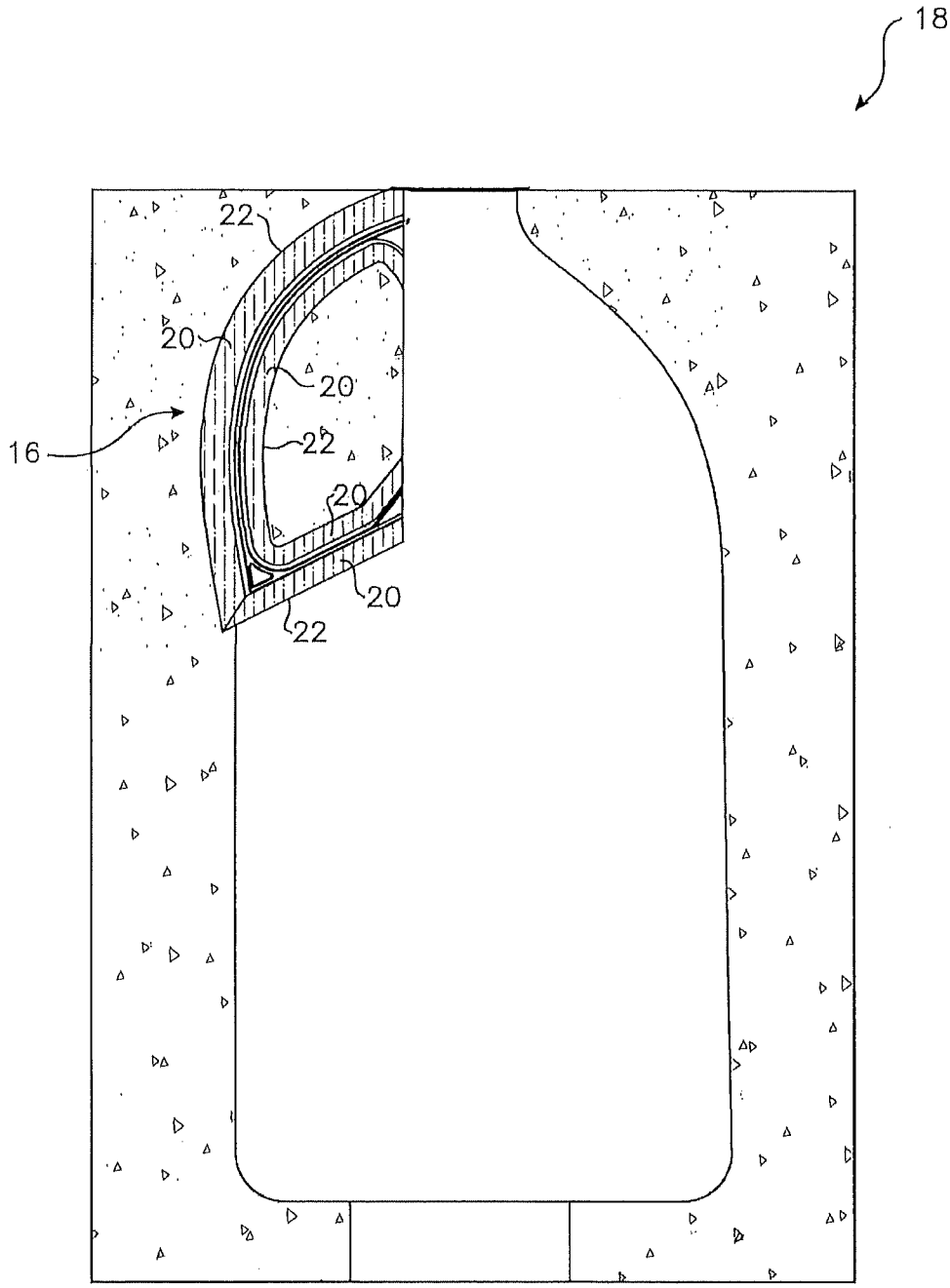

Fig. 50

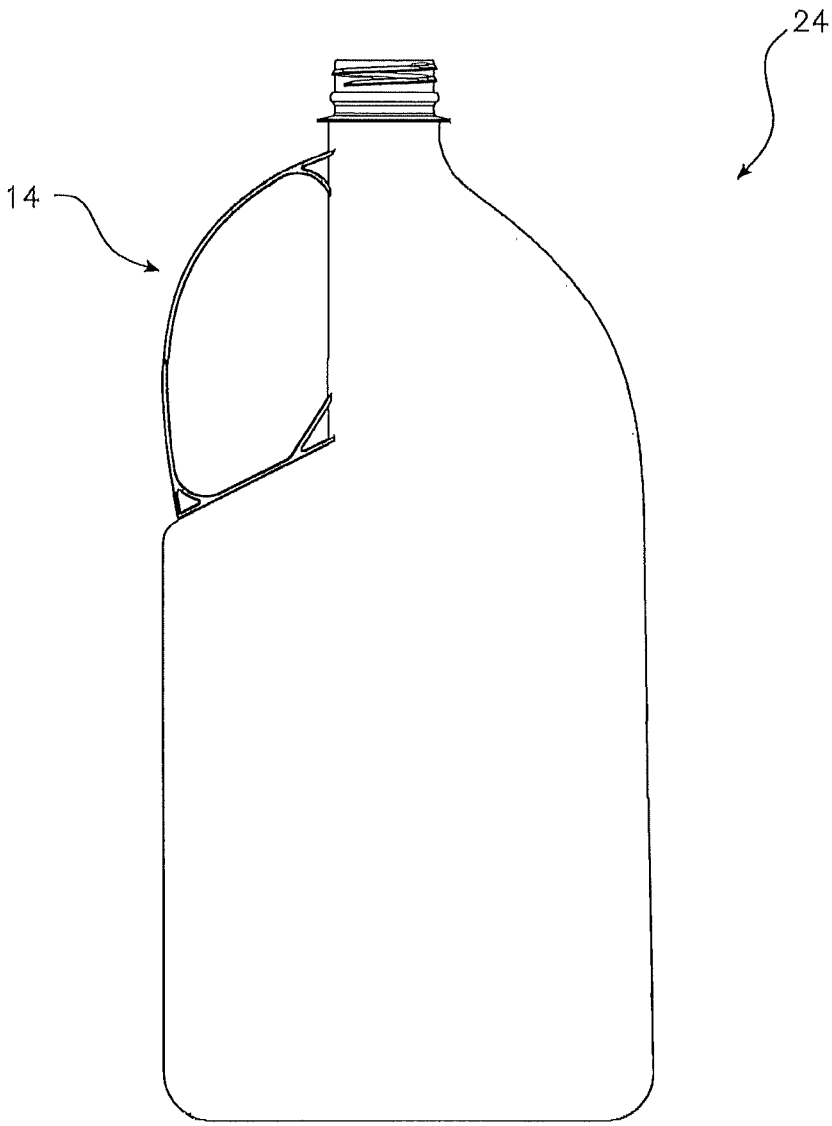

Fig. 51

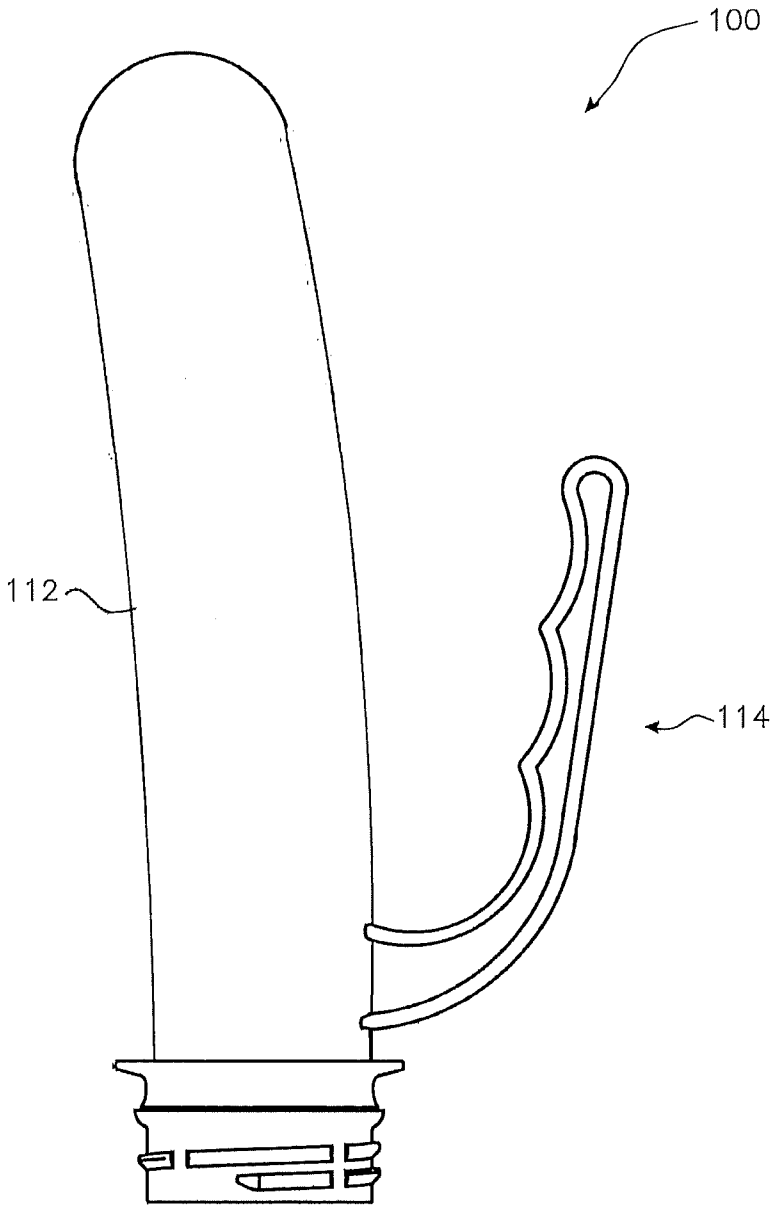

Fig. 52

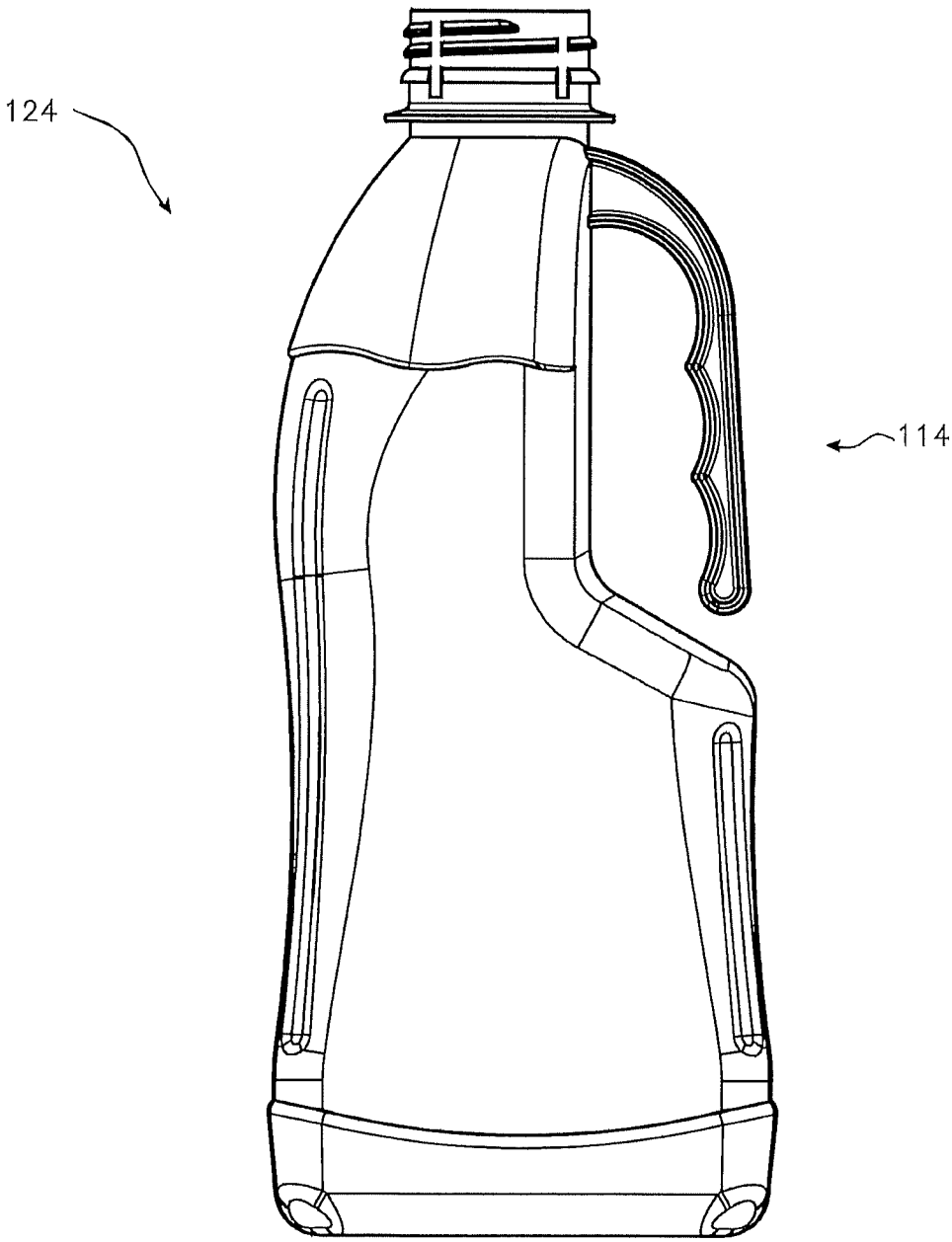

Fig. 53

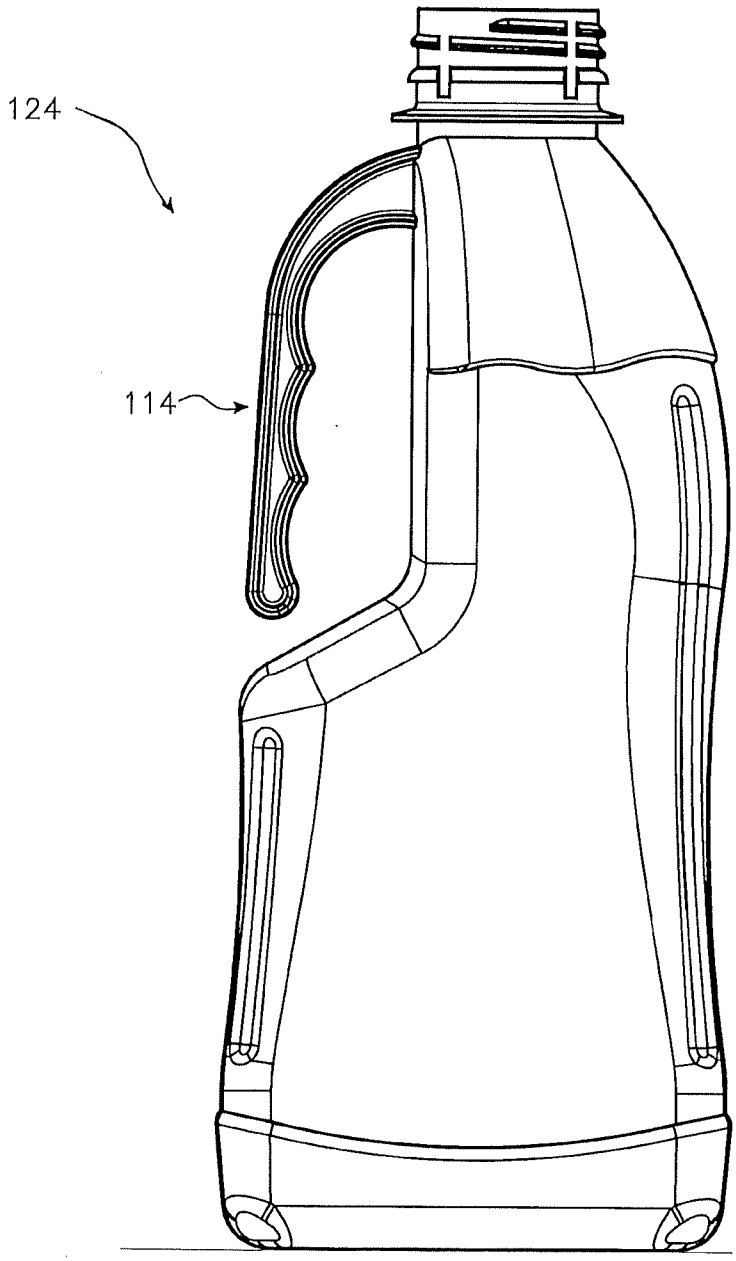

Fig. 54

INTERNATIONAL SEARCH REPORT

International application No.
PCT/AU2022/050453

A. CLASSIFICATION OF SUBJECT MATTER

B29B 11/08 (2006.01) ***B29B 11/14 (2006.01)*** ***B29C 49/00 (2006.01)*** ***B29C 49/08 (2006.01)*** ***B29C 49/28 (2006.01)***
B29C 49/42 (2006.01) ***B29C 49/48 (2006.01)*** ***B29C 49/64 (2006.01)*** ***B29K 67/00 (2006.01)*** ***B29L 23/00 (2006.01)***
B29L 31/00 (2006.01)

According to International Patent Classification (IPC) or to both national classification and IPC

B. FIELDS SEARCHED

Minimum documentation searched (classification system followed by classification symbols)

Documentation searched other than minimum documentation to the extent that such documents are included in the fields searched

Electronic data base consulted during the international search (name of data base and, where practicable, search terms used)

PATENW & ESPACENET & GOOGLE PATENTS/SCHOLAR/SEARCH: IPC/CPC B29C49/48, B29C2949/07, B29C2949/0791, B29C49/6472, B29C49/08, B29C49/0005, B29C49/28, B29L2031/7158, B29L2031/757, B65B3/022, B65D1/02/LOW, B29B11/14, B29K2067/003, B29L2023/22, B29C49/4205, B29C49/42119, B29C2049/7878, B29C2049/4856, B29C2949/0763, B65G47/24, B29C31/002, B29C31/085, B29C49/78, B29C49/42, B29C49/64 & **Keywords** integral, handle, preform, PET, blow moulding, combined, grip, protect, heat, shield, cover, continuous, loading, bottle, connect and like terms. Applicant and Inventor name searched in IP Australia internal databases.

C. DOCUMENTS CONSIDERED TO BE RELEVANT

Category*	Citation of document, with indication, where appropriate, of the relevant passages	Relevant to claim No.
	Documents are listed in the continuation of Box C	

[X] Further documents are listed in the continuation of Box C [X] See patent family annex

* Special categories of cited documents:
"A" document defining the general state of the art which is not considered to be of particular relevance
"D" document cited by the applicant in the international application
"E" earlier application or patent but published on or after the international filing date
"L" document which may throw doubts on priority claim(s) or which is cited to establish the publication date of another citation or other special reason (as specified)
"O" document referring to an oral disclosure, use, exhibition or other means
"P" document published prior to the international filing date but later than the priority date claimed
"T" later document published after the international filing date or priority date and not in conflict with the application but cited to understand the principle or theory underlying the invention
"X" document of particular relevance; the claimed invention cannot be considered novel or cannot be considered to involve an inventive step when the document is taken alone
"Y" document of particular relevance; the claimed invention cannot be considered to involve an inventive step when the document is combined with one or more other such documents, such combination being obvious to a person skilled in the art
"&" document member of the same patent family

Date of the actual completion of the international search	Date of mailing of the international search report
19 August 2022	19 August 2022
Name and mailing address of the ISA/AU	**Authorised officer**
AUSTRALIAN PATENT OFFICE PO BOX 200, WODEN ACT 2606, AUSTRALIA Email address: pct@ipaustralia.gov.au	Kosta Tsoukalis AUSTRALIAN PATENT OFFICE (ISO 9001 Quality Certified Service) Telephone No. +61 2 6283 2620

INTERNATIONAL SEARCH REPORT C (Continuation). DOCUMENTS CONSIDERED TO BE RELEVANT		International application No. **PCT/AU2022/050453**
Category*	Citation of document, with indication, where appropriate, of the relevant passages	Relevant to claim No.
X	WO 2013/093610 A1 (B&R INDUSTRIES PTY LTD) 27 June 2013 Figures 2-3; Abstract; Claims 14, 16; Paragraph [0041].	1-16, 20, 23-27
X	US 2018/0281233 A1 (DT INVENTIONS) 04 October 2018 Abstract; Figures 6-7C, 9A-9C, 11A-11C, 13A-13C; Paragraphs [0063], [0067]; Claim 15	1-16, 20, 23, 25-27
X	US 2011/0064899 A1 (THIBODEAU) 17 March 2011 Abstract; Claims 1, 10; Figures 2-3; Paragraph [0011]	1-5, 7-12, 16.
X	US 2016/0082645 A1 (R&D TOOL & ENGINEERING CO.) 24 March 2016 Abstract; Paragraph [0005]; Figures 8, 12, 15-16, Claim 21	1-5, 7-12, 16, 20

INTERNATIONAL SEARCH REPORT

International application No.
PCT/AU2022/050453

Box No. II Observations where certain claims were found unsearchable (Continuation of item 2 of first sheet)

This international search report has not been established in respect of certain claims under Article 17(2)(a) for the following reasons:

1. ☐ Claims Nos.:
because they relate to subject matter not required to be searched by this Authority, namely:
the subject matter listed in Rule 39 on which, under Article 17(2)(a)(i), an international search is not required to be carried out, including

2. ☒ Claims Nos.: 17-19, 21-22
because they relate to parts of the international application that do not comply with the prescribed requirements to such an extent that no meaningful international search can be carried out, specifically:
See Supplemental Box

3. ☐ Claims Nos:
because they are dependent claims and are not drafted in accordance with the second and third sentences of Rule 6.4(a)

Box No. III Observations where unity of invention is lacking (Continuation of item 3 of first sheet)

This International Searching Authority found multiple inventions in this international application, as follows:

See Supplemental Box for Details

1. ☐ As all required additional search fees were timely paid by the applicant, this international search report covers all searchable claims.
2. ☒ As all searchable claims could be searched without effort justifying additional fees, this Authority did not invite payment of additional fees.
3. ☐ As only some of the required additional search fees were timely paid by the applicant, this international search report covers only those claims for which fees were paid, specifically claims Nos.:
4. ☐ No required additional search fees were timely paid by the applicant. Consequently, this international search report is restricted to the invention first mentioned in the claims; it is covered by claims Nos.:

Remark on Protest

☐ The additional search fees were accompanied by the applicant's protest and, where applicable, the payment of a protest fee.

☐ The additional search fees were accompanied by the applicant's protest but the applicable protest fee was not paid within the time limit specified in the invitation.

☐ No protest accompanied the payment of additional search fees.

Supplemental Box

Continuation of **Box II**

Claims 17-19, 21-22 are so unclear that it makes it difficult to understand the features of these claims and which embodiments they relate to. This is especially the case since these claims are, in part, appended to claims which are considered to lack clarity, thus making it difficult to form a reasonable construction and thus opinion on these claims. As a result, I have reserved opinion on these claims until the applicant amends and/or further clarifies the scope of these claims in their response to the Opinion.

Continuation of: **Box III**

This International Application does not comply with the requirements of unity of invention because it does not relate to one invention or to a group of inventions so linked as to form a single general inventive concept.

This Authority has found that there are different inventions based on the following features that separate the claims into distinct groups:

- Group I: Claims 1, 4-5 (in part), 7-27 (in part) are directed to a PET container having a neck portion and a body portion to which is integrally connected to a PET handle.. The feature of a region in the form of a strip of PET material is located on the container under the PET handle is specific to this group of claims.

- Group II: Claims 2, 4-27 (in part) are directed to a PET container having a neck portion and a body portion to which is integrally connected to a PET handle.. The feature of an elongate portion of PET material; and a region in the form of a strip of PET material is located on the preform and the corresponding container opposite the elongate portion of PET material is specific to this group of claims.

- Group III: Claim 3, 4-5 (in part), 7-27 (in part) are directed to a PET container having a neck portion and a body portion to which is integrally connected to a PET handle.. The feature of a region in the form of a strip of PET material is located on the preform and corresponding container opposite the PET handle is specific to this group of claims.

- Group IV: Claims 6-27 (in part) are directed to a PET container stretch blow-moulded from a preform; the preform and the container having a neck portion and a body portion to which is integrally connected a PET handle.. The feature of the strip of material differentiated in thickness from thickness of a wall of the container on a side opposite from that of the connection point is specific to this group of claims.

PCT Rule 13.2, first sentence, states that unity of invention is only fulfilled when there is a technical relationship among the claimed inventions involving one or more of the same or corresponding special technical features. PCT Rule 13.2, second sentence, defines a special technical feature as a feature which makes a contribution over the prior art.

When there is no special technical feature common to all the claimed inventions there is no unity of invention.

In the above groups of claims, the identified features may have the potential to make a contribution over the prior art but are not common to all the claimed inventions and therefore cannot provide the required technical relationship. Therefore there is no special technical feature common to all the claimed inventions and the requirements for unity of invention are consequently not satisfied *a priori*.

INTERNATIONAL SEARCH REPORT Information on patent family members	International application No. **PCT/AU2022/050453**

This Annex lists known patent family members relating to the patent documents cited in the above-mentioned international search report. The Australian Patent Office is in no way liable for these particulars which are merely given for the purpose of information.

Patent Document/s Cited in Search Report		Patent Family Member/s	
Publication Number	**Publication Date**	**Publication Number**	**Publication Date**
WO 2013/093610 A1	27 June 2013	WO 2013093610 A1	27 Jun 2013
		AU 2012356292 A1	31 Jul 2014
		AU 2012356292 B2	05 May 2016
		EP 2794229 A1	29 Oct 2014
		EP 2794229 B1	22 Apr 2020
		IL 233233 B	31 Oct 2018
		JP 2015506285 A	02 Mar 2015
		JP 6315206 B2	25 Apr 2018
		MY 172397 A	22 Nov 2019
		NZ 627288 A	31 Mar 2016
		SG 11201403548Y A	26 Sep 2014
US 2018/0281233 A1	04 October 2018	US 2018281233 A1	04 Oct 2018
		US 10703020 B2	07 Jul 2020
		AU 2018250176 A1	21 Nov 2019
		AU 2018250176 B2	30 Sep 2021
		BR 112019020801 A2	28 Apr 2020
		CA 3059224 A1	11 Oct 2018
		CL 2019002833 A1	13 Mar 2020
		CN 110678305 A	10 Jan 2020
		CO 2019012042 A2	18 Feb 2020
		EP 3606713 A1	12 Feb 2020
		JP 2020515443 A	28 May 2020
		JP 6872636 B2	19 May 2021
		KR 20190139237 A	17 Dec 2019
		KR 102227623 B1	16 Mar 2021
		PE 20200096 A1	16 Jan 2020
		US 2020215723 A1	09 Jul 2020
		US 11220024 B2	11 Jan 2022
		US 2020215722 A1	09 Jul 2020
		WO 2018187412 A1	11 Oct 2018
US 2011/0064899 A1	17 March 2011	US 2011064899 A1	17 Mar 2011
		US 8524143 B2	03 Sep 2013
		US 2013328247 A1	12 Dec 2013
		US 9073667 B2	07 Jul 2015
		US 2014034601 A1	06 Feb 2014

Due to data integration issues this family listing may not include 10 digit Australian applications filed since May 2001.

INTERNATIONAL SEARCH REPORT Information on patent family members	International application No. **PCT/AU2022/050453**

This Annex lists known patent family members relating to the patent documents cited in the above-mentioned international search report. The Australian Patent Office is in no way liable for these particulars which are merely given for the purpose of information.

Patent Document/s Cited in Search Report		Patent Family Member/s	
Publication Number	**Publication Date**	**Publication Number**	**Publication Date**
		US 9499302 B2	22 Nov 2016
		US 2017028609 A1	02 Feb 2017
		US 10391698 B2	27 Aug 2019
US 2016/0082645 A1	24 March 2016	US 2016082645 A1	24 Mar 2016
		US 9962881 B2	08 May 2018
		WO 2016043838 A1	24 Mar 2016

End of Annex

Due to data integration issues this family listing may not include 10 digit Australian applications filed since May 2001.