No. 801,279. PATENTED OCT. 10, 1905.

J. VAN SLYKE.

MATTRESS ENVELOP.

APPLICATION FILED OCT. 28, 1904.

2 SHEETS—SHEET 1.

Fig. 1

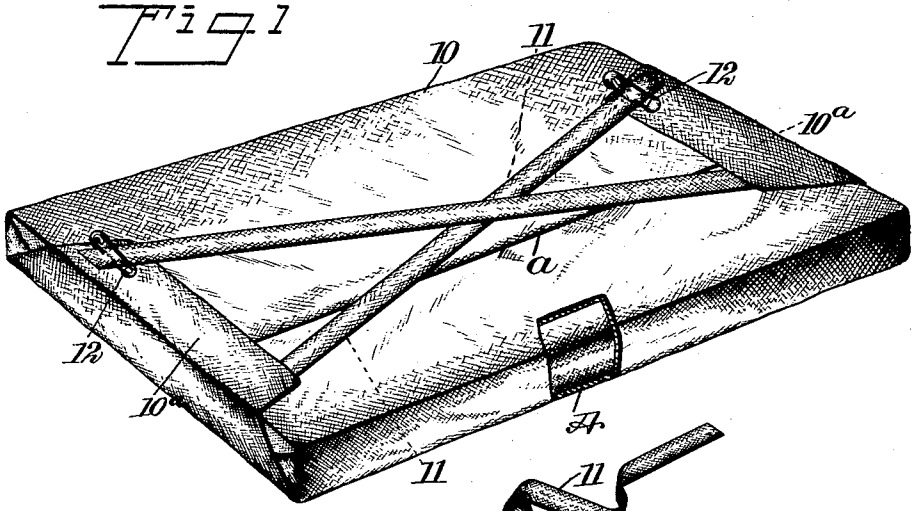

Fig. 2

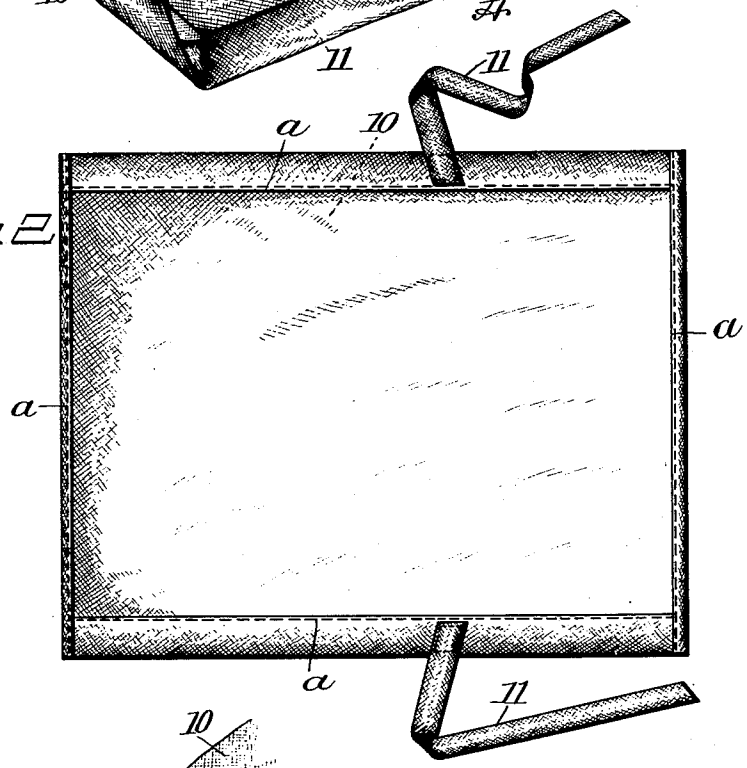

Fig. 3

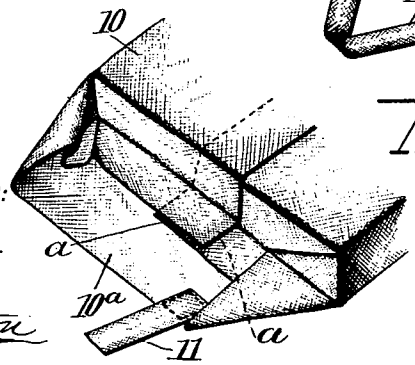

WITNESSES:

J. A. Brophy

Wm. P. Patton

INVENTOR

Josephine Van Slyke

BY

ATTORNEYS

No. 801,279. PATENTED OCT. 10, 1905.

J. VAN SLYKE.

MATTRESS ENVELOP.

APPLICATION FILED OCT. 28, 1904.

2 SHEETS—SHEET 2.

Fig. 4

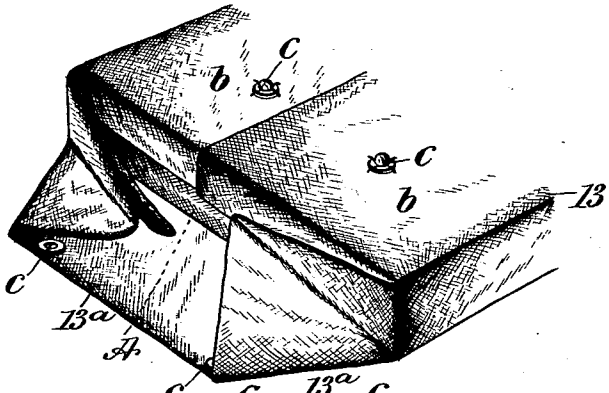

Fig. 5

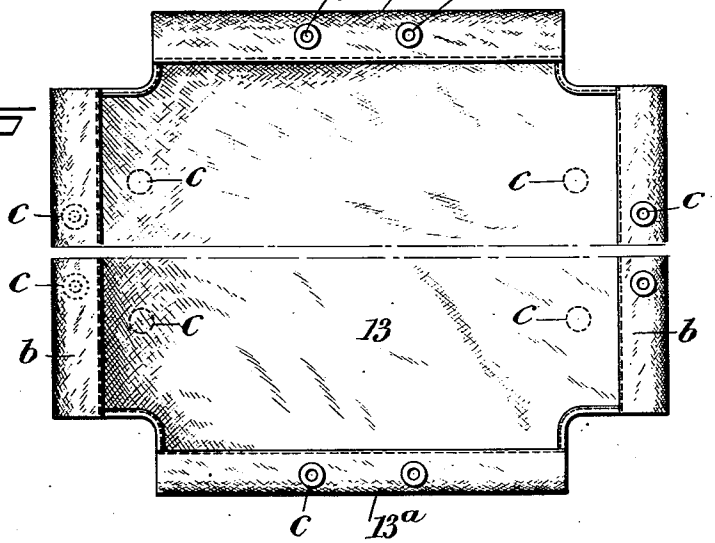

Fig. 6

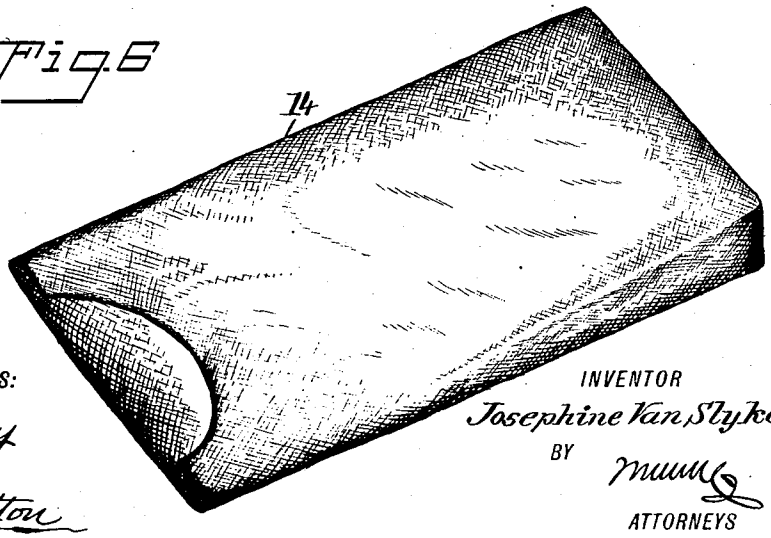

WITNESSES:

J. H. Brophy

Wm. P. Patton

INVENTOR

Josephine Van Slyke

BY

Munn & Co.

ATTORNEYS

UNITED STATES PATENT OFFICE

JOSEPHINE VAN SLYKE, OF DETROIT, MICHIGAN.

MATTRESS-ENVELOP.

No. 801,279. Specification of Letters Patent. Patented Oct. 10, 1905.

Application filed October 28, 1904. Serial No. 230,290.

To all whom it may concern:

Be it known that I, JOSEPHINE VAN SLYKE, a citizen of the United States, and a resident of Detroit, in the county of Wayne and State of Michigan, have invented a new and Improved Mattress-Envelop, of which the following is a full, clear, and exact description.

Mattresses for beds are liable to become soiled from various causes, requiring costly renovation.

For sanitary considerations and to preserve a mattress from undue wear, insure its absolute cleanliness, and avoid expensive reconstruction necessary when the exterior fabric is to be renovated I have devised an enveloping-cover for a mattress which is readily applied and removed, which perfectly protects the entire surface of the mattress-cloth from contact with anything which might soil or infect it with disease germs, which may be quickly exchanged for a clean one at proper intervals of time, thus conducing to personal comfort of the occupant of the bed, affords complete sanitary protection, preserves the mattress in a pure condition, and reduces wear of the mattress fabric to a minimum.

The invention consists in the provision of an exchangeable mattress covering or envelop constructed as hereinafter set forth and claimed.

Reference is to be had to the accompanying drawings, forming a part of this specification, in which similar characters of reference indicate corresponding parts in all the figures.

Figure 1 is a perspective view of one form of the envelop applied upon a mattress and one means for detachably securing the envelop thereon. Fig. 2 is a plan view of the mattress-envelop shown in Fig. 1 detached from the mattress. Fig. 3 is a perspective view of an end portion of the mattress-envelop shown in Figs. 1 and 2, representing the manner of folding the envelop upon an end of the mattress. Fig. 4 is a like view to Fig. 3, but showing a modified means for detachably securing the envelop on a mattress. Fig. 5 is a detached plan view of a mattress-envelop, shown reduced in length, slightly modified in marginal form as compared with the envelop represented in the preceding figures, and held in place on a mattress by the means shown in Fig. 4; and Fig. 6 is a perspective view of a further-modified construction of the mattress-envelop.

In Figs. 1 to 3, inclusive, an advantageous construction of the improvement is shown, the envelop consisting of a marginally-rectangular sheet of fibrous fabric 10 or other suitable material that may be readily folded. The sheet 10 may with advantage be hemmed at its edges, as shown at *a* in Fig. 2, and is so proportioned in length and width as will adapt it to be folded around the mattress A laterally and lap at its side edges, as is plainly shown in Fig. 3 by full and dotted lines. The end portions of the enveloping-sheet 10 extend beyond the ends of the mattress sufficiently to permit them each to be doubled in and folded, as flaps 10^a, over the ends of said mattress and over the adjacent lapped portions *a* of the sheet, thus completely enveloping the mattress.

One available means for detachably securing the enveloping-sheet upon the mattress A, that is partially shown at its side edge and end, respectively, in Figs. 1 and 4, consists of two preferably elastic bands 11, which are secured by one end of each band upon like corners of the folded flaps 10^a, these bands being drawn taut toward the remaining corners of the flaps, whereon they are attached by safety-pins 12, thus disposing the bands diagonally one across the other and holding the flaps 10^a bound closely upon the folded edge portions *a*, as is clearly shown in Fig. 1.

In Figs. 4 and 5 the enveloping-sheet 13 differs from that shown in Fig. 2 in that portions are removed from the corners of the fabric, thus avoiding bulkiness where the material is folded at the ends of the mattress to cover the same with flaps 13^a, it being understood that the side portions *b b* (shown of reduced length in Fig. 5) are lapped over the side edges of the mattress and one upon the other before the end flaps 13^a are formed, which when folded upon the envelop fabric at the ends of the mattress may be secured to the lapped portions *b* by snap-buttons *c*, such as are in common use as garment-fasteners.

In Fig. 6 the mattress-envelop 14 is shown in bag form, closed at the bottom and sides, but open at the opposite end for the reception of a mattress of the ordinary rectangular form, and for closure of said open end the envelop is of sufficient length to permit folding of the material similarly to that shown in Figs. 3 and 4, thus providing a flap that may be lapped over the end of the mattress and

be secured upon the adjacent side of the envelop, either with a snap-button or a safety-pin, as may be preferred.

It will be seen that the envelop of pliable fabric may be quickly secured as a complete inclosure for a mattress and may be shaped to conform with the contour of the same, thus providing a perfect protection for the mattress against soiling, and as the envelop receives the wear to which the mattress would be subjected if uncovered said envelop adds to the durability of the mattress. The exchange of the mattress-envelop may be made as often as is found desirable, thus substituting a clean one for one which is soiled, so that the bed may be kept clean, inodorous, and sanitary, as the material of the envelop when renovated may be sterilized to eradicate disease germs.

Having thus described my invention, I claim as new and desire to secure by Letters Patent—

1. An envelop for a mattress comprising a sheet of fibrous fabric wrapped upon the mattress around its side edges, and lapped at the folded portions one on the other, extended ends of the fabric being folded into flaps over the ends of the mattress, bands secured by one end of each upon a corner of a respective flap and extended to the opposite corner on the other flap crossing each other, and pins or other means for holding the bands drawn taut.

2. An envelop for a mattress comprising a sheet of fibrous fabric having a rectangular contour, said sheet being wrapped upon the mattress and having its side edge portions lapped one upon the other, the end portions of the fabric that have been folded along with the intermediate portion thereof being folded into flaps that are lapped upon respective ends of the mattress, two elongated bands, one end of each band being attached to a corner of a flap and thence extended diagonally to a corner on the other flap, said bands crossing each other, and safety-pins or the like engaging the extended ends of the bands and the corners of the flaps they lap upon, for detachably securing said ends of the bands upon the flaps and thus securing the envelop upon the mattress.

In testimony whereof I have signed my name to this specification in the presence of two subscribing witnesses.

JOSEPHINE VAN SLYKE.

Witnesses:

ADOLPHUS W. WIER,
MAUD E. SUMAN.