Dec. 16, 1952 R. J. VAN SCHIE 2,621,806

MACHINE FOR FEEDING METAL SHEETS FROM THE TOP OF STACKS

Filed Aug. 1, 1950 4 Sheets-Sheet 1

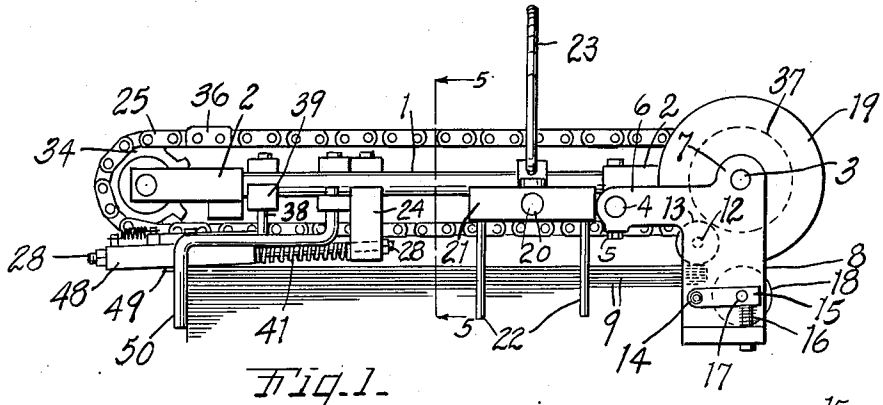

Fig. 1.

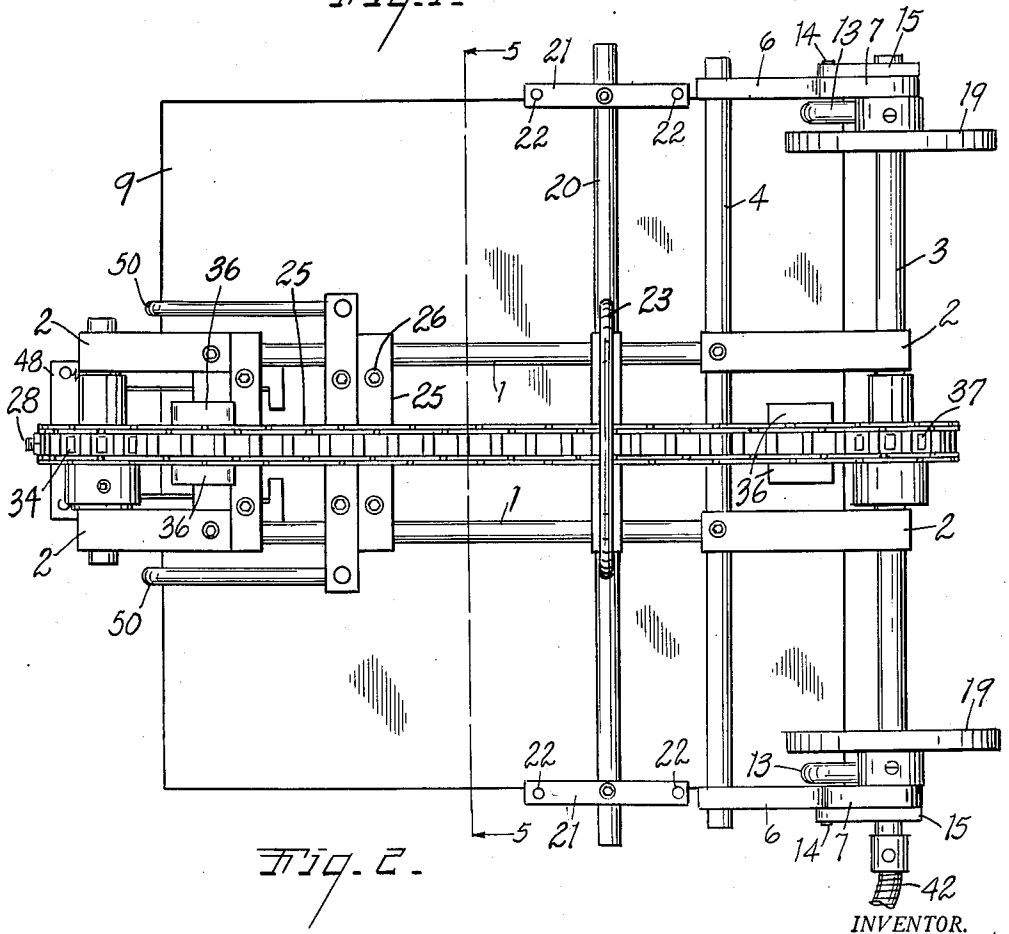

Fig. 2.

INVENTOR.
Robert J. VanSchie
BY
ATTORNEY

Dec. 16, 1952 R. J. VAN SCHIE 2,621,806

MACHINE FOR FEEDING METAL SHEETS FROM THE TOP OF STACKS

Filed Aug. 1, 1950 4 Sheets-Sheet 2

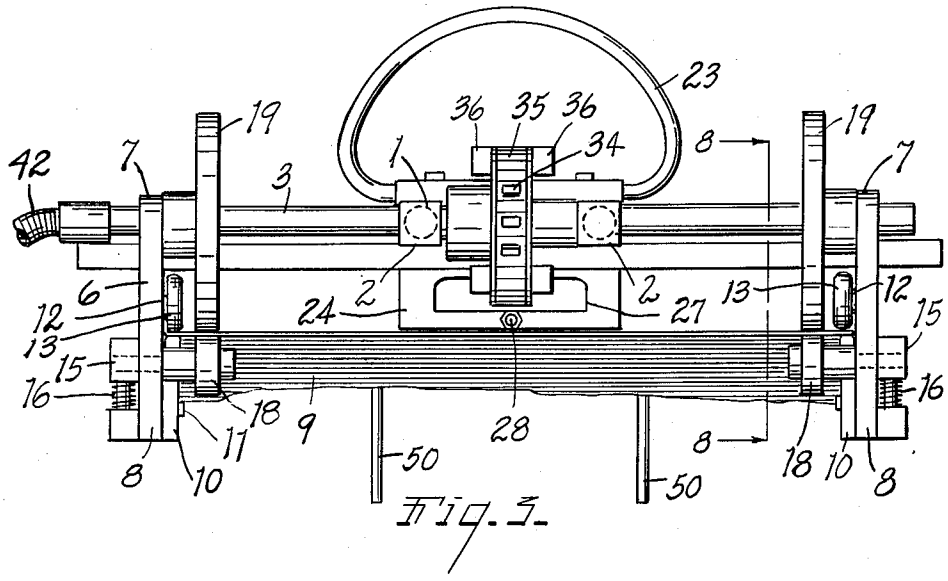

Fig. 3.

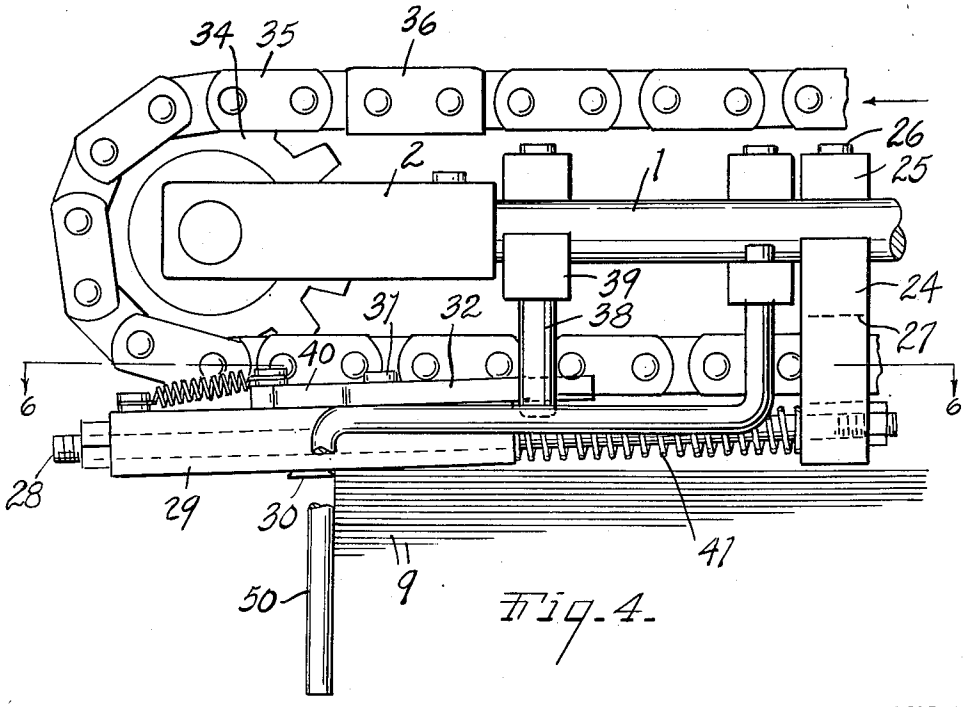

Fig. 4.

INVENTOR.
Robert J. Van Schie
BY
Otto A. Earl
ATTORNEY.

Dec. 16, 1952 R. J. VAN SCHIE 2,621,806

MACHINE FOR FEEDING METAL SHEETS FROM THE TOP OF STACKS

Filed Aug. 1, 1950 4 Sheets-Sheet 3

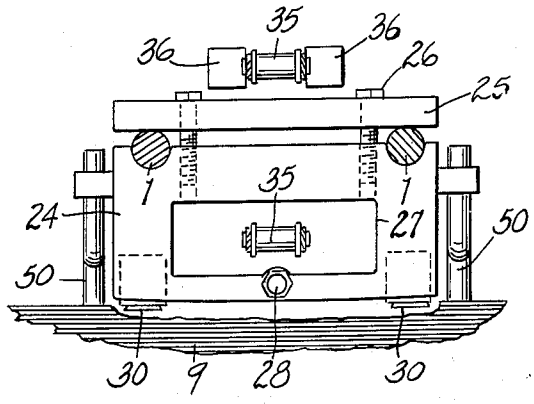

Fig. 5.

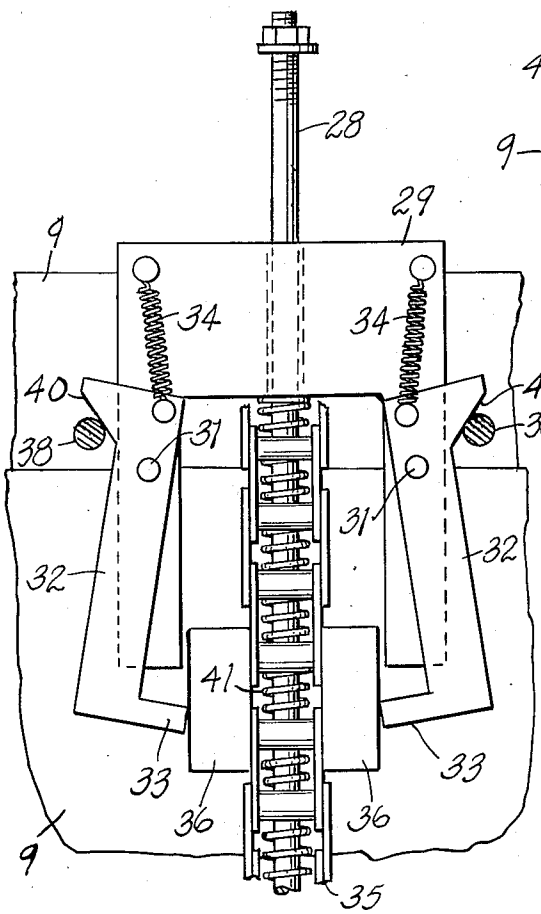

Fig. 7.

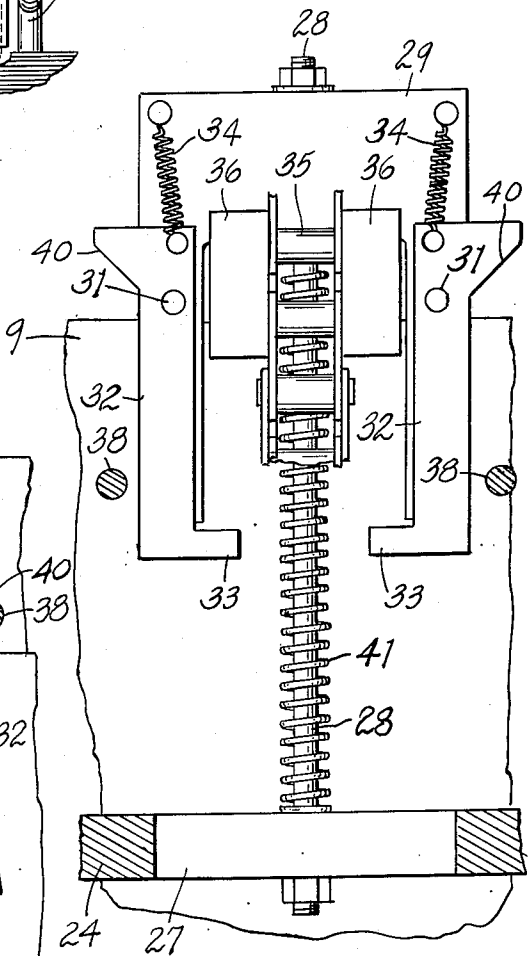

Fig. 6.

INVENTOR.
Robert J. Van Schie
BY
Otto Earl
ATTORNEY.

Dec. 16, 1952 R. J. VAN SCHIE 2,621,806

MACHINE FOR FEEDING METAL SHEETS FROM THE TOP OF STACKS

Filed Aug. 1, 1950 4 Sheets-Sheet 4

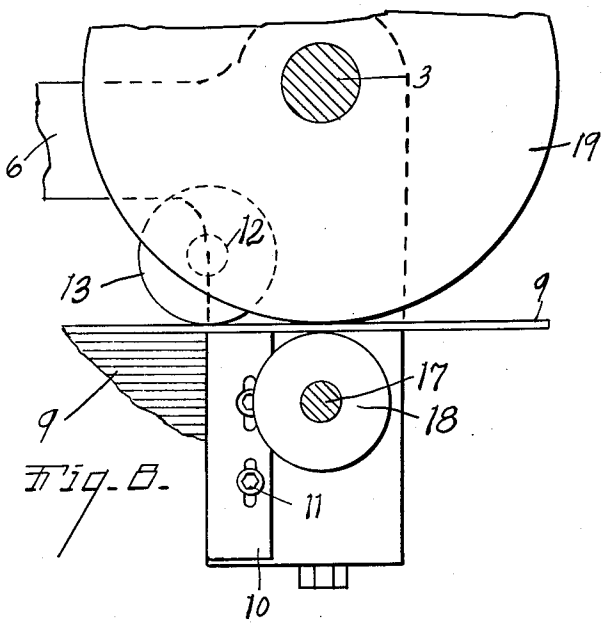

Fig. 8.

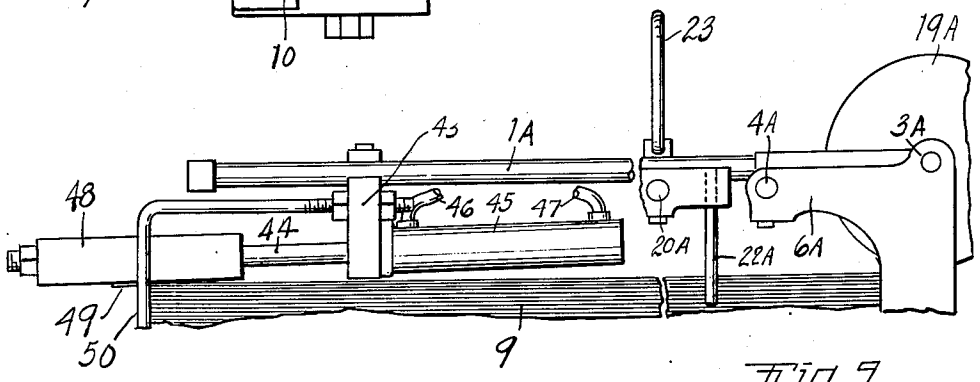

Fig. 9.

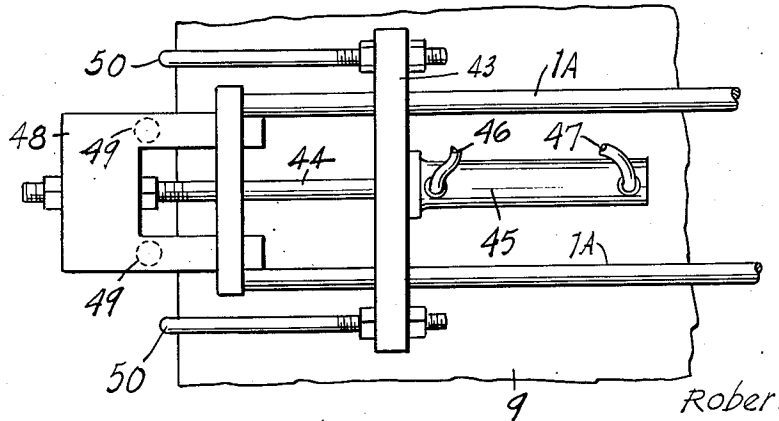

Fig. 10.

INVENTOR.
Robert J. Van Schie
BY
Otto Earl
ATTORNEY.

Patented Dec. 16, 1952

2,621,806

UNITED STATES PATENT OFFICE

2,621,806

MACHINE FOR FEEDING METAL SHEETS FROM THE TOP OF STACKS

Robert J. Van Schie, Grand Rapids, Mich.

Application August 1, 1950, Serial No. 177,030

12 Claims. (Cl. 214—8.5)

1

This invention relates to improvements in a machine for feeding metal sheets from the top of a stack.

The principal objects of this invention are:

First, to provide an improved form of sheet feeding mechanism which will reliably function to feed the top sheet from a stack of metal sheets, even though some of the sheets may be badly bent.

Second, to provide a sheet feeding machine of the floating type which descends along a stack of sheets as the top sheets are successively fed therefrom and which is supported on the stack from three points so as to always operatively engage the top sheet of the stack, even though the sheet may be bent.

Third, to provide a sheet feeding machine having a translatable feeding alignment which forms a central support for the rear end of the machine and which is transversely tiltable to successively engage the rear edge of a sheet on which the machine is supported, even though the sheet may be bent.

Fourth, to provide a sheet feeding machine which is easily adjustable transversely and longitudinally to operate upon sheets of different sizes.

Fifth, to provide a sheet feeding machine which is relatively light and of simple construction, yet which is entirely effective and positive in sheet feeding action.

Other objects and advantages relating to details of my invention will be apparent from a consideration of the following description and claims.

The drawings, of which there are four sheets, illustrate two forms of my sheet feeding machine, one adapted for operation by rotary or mechanical power and the other adapted for operation by hydraulic power. The two forms of the machine are equally effective so that neither one is designated as a preferred form as any choice between the machines depends solely upon the type of power available.

Fig. 1 is a side elevational view of the first form of machine operatively positioned upon a stack of metal sheets.

Fig. 2 is an enlarged plan view of the machine shown in Fig. 1.

Fig. 3 is a front elevational view of the machine shown in Fig. 1.

Fig. 4 is an enlarged fragmentary side elevational view of the back end of the machine shown in Fig. 1.

Fig. 5 is a fragmentary transverse vertical cross sectional view taken along the plane of line 5—5 of Figs. 1 and 2.

2

Fig. 6 is an enlarged fragmentary horizontal cross sectional view of the rear end of the machine taken along the plane of line 6—6 in Fig. 4.

Fig. 7 is an enlarged fragmentary horizontal view similar to Fig. 6 but showing the sheet advance mechanism in advanced position.

Fig. 8 is an enlarged fragmentary longitudinal cross sectional view through the forward end of the machine taken along the plane of the line 8—8 in Fig. 3.

Fig. 9 is a fragmentary side elevational view, partially broken away, of a modified form of the machine shown in Fig. 1.

Fig. 10 is a fragmentary plan view of the rear end of the machine shown in Fig. 9.

The principal supporting or body elements of the first form of my machine consist of the transversely spaced longitudinally extending parallel rods 1. A pair of longitudinal blocks 2 are secured to the forward ends of the rods and project forwardly therefrom to form transverse bearings for a transversely extending drive shaft 3. The rear ends of the blocks 2 also form supporting connections for the transversely extending rod 4 which projects laterally from each side of the longitudinal rods beyond the sides of the largest sheet which the machine is to be applied to. Transversely adjustably mounted on the ends of the transverse rod 4 and secured thereto as by the setscrews 5 (see Fig. 1) are a pair of bearing blocks 6. The blocks 6 extend forwardly and are provided in their forward upper corners with bearings 7 for the ends of the drive shaft 3.

The bearing blocks 6 are provided with vertically depending extensions 8 on their forward ends which are adapted to lie alongside of the sides of a stack of metal sheets indicated at 9—9. The depending portions 8 thus transversely locate or center the longitudinal rods 1 over the top of the stack. Forwardly of the forward edges of the sheets 9 the depending portions 8 are provided on their inner sides with vertically adjustable throat pieces 10 which engage the forward edges of the sheets 9. The throat pieces are adjustably clamped in place by the screws 11 shown in Figs. 3 and 8. The inner sides of the depending portions 8 are further provided with stub shafts 12 located above and to the rear of the throat pieces 10. The shafts 12 rotatably support the front supporting wheels 13 which are thus positioned with their lower rims spaced slightly above and to the rear of the throat pieces 10. The supporting wheels 13 are transversely rounded to permit slight rocking of the machine

and are located over the front edges of the sheets 9 by reason of the engagement of the throat pieces with the front side of the stack. The vertical space between the wheels 13 and throat pieces 10 constitutes a variable thickness throat which will pass a single one of the sheets 9.

Outwardly projecting pivot pins 14 on the depending portions 8 of the bearing blocks pivotally support the forwardly projecting arms 15. The forward ends of the arms 15 are constantly urged upwardly by coil springs 16 and stub shafts 17 carried by the arms project inwardly through the depending portions 8 and rotatably support the pressure rollers 18 below the feed rollers 19 mounted on the ends of the drive shaft 3. By reference to Fig. 8 it will be noted that the pressure rollers 18 and feed rollers 19 are located forwardly of the supporting wheels 13 and the throat blocks 10. The feed rollers 19 are thus ineffective to operate on the sheets 9 until one of the sheets is advanced through the throat to between the feed rollers and pressure rollers.

Rearwardly of the transverse bar 4, the longitudinal rods 1 are connected to a transverse guide and carrying rod 20. Side blocks 21 with depending fingers 22 are transversely adjustable on the rod 20 to engage the sides of the stack of sheets and further align the machine upon the stack. Desirably a handle or hook 23 is secured to the top of the transverse bar 20 as this is approximately over the center of gravity of the machine and forms a convenient point for lifting the machine in transferring it from one stack of sheets to another.

Still further rearwardly of the transverse bar 20 there is provided a rear support block 24. The rear support block 24 depends below the longitudinal rods 1 and is longitudinally adjustably secured thereto by the transversely extending clamp plate 25 and the screws 26. The rear support block 24 has an opening 27 formed therethrough for the passage of a chain, to be described, and the lower portion of the support block rigidly supports a guide rod 28 which projects rearwardly at a slightly downwardly inclined angle as is best illustrated in Fig. 4. The guide rod 26 serves to slidably support the shoe 29 and the under surface of the shoe rests upon the top of the stack of sheets 9 to support the rear end of the machine from the central portion of the stack.

As is best illustrated in Figs. 4 to 7 the shoe 29 is of forwardly opening U-shaped outline with the base of the U slidably and rotatably embracing the guide rod 28. The forwardly extending arms of the U-shaped shoe at all times project forwardly over the top of the stack of sheets and are provided with depending jaws 30 midway along their under sides. The jaws 30 are desirably provided with knife edges and are no thicker than the thickness of the sheets to be fed so that advancing motion of the shoe on the guide rod will function to engage and advance the top sheet of the stack. It will be noted that the relatively narrow width of the shoe 29 coupled with its central location transversely of the stack and the rotatable character of the shoe on the guide rod 28 permits the shoe to accurately align itself with and engage the rear edge of the top sheet 9 regardless of any bends which may be present in the sheet. The action of the shoe 29 and teeth 30 on the top sheet 9 is thus positive.

In order to advance the shoe 29 on the guide rod 28 the side branches of the U-shaped shoe are provided with upstanding pivot pins 31 on which are pivotally mounted the generally flat fingers 32. The forward ends of the fingers 32 are provided with inwardly turned jaw or nose portions 33. Tension springs 34 connected between the rear ends of the fingers 32 and fixed points on the shoe 29 serve to bias the fingers and nose portions 33 inwardly to closely spaced relationship. Rotatably mounted between the rear ends of the longitudinal rods 1 is an idler sprocket 34 positioned over the shoe 29. Trained around the sprocket 34 is a chain 35, the lower reach of which extends between the nose portions 33 on the fingers and forwardly through the previously described opening 27 in the rear support block 24. Outwardly projecting dogs 36 carried at intervals on opposite sides of the chain 35 are operative to engage the rear faces of the nose portions 33 and thus advance the fingers 32 and shoe 29 with the lower reach of the chain 35. The chain 35 is driven from the drive shaft 3 at the front of the machine by a sprocket 37.

During the engaged forward motion of the dogs 36 and nose portions 33 the fingers 32 are restrained against outward swinging motion by reason of the engagement of the depending release pins 38 along the outer sides of the fingers 32. The release pins 38 are fixedly mounted on the longitudinal rods 1 by means of the crossbar 39 and project downwardly therefrom far enough to lie alongside of the fingers. As the fingers 32 and shoe 29 are advanced past the release pins 38 as is most clearly illustrated in Figs. 6 and 7 the pivot pins 31 of the fingers 32 will be carried past the release pins so that there is no longer any restraint to outward swinging motion of the forward ends of the fingers 32. Forward pressure of the dogs 36 on the nose portions 33 accordingly spreads the nose portions until the dogs can slide forwardly therebetween. In the event that the forward motion of the dogs does not automatically spread the fingers 32, the rear ends of the fingers are provided with outwardly projecting releasing cams 40 which engage the releasing pins as in Fig. 7 to positively open the fingers 32. The chain 35 and dogs 36 are thus free to continue their advance while forward motion of the shoe 29 is terminated. The shoe 29 is returned to its rearmost position after release of the dogs 36 by means of a coil spring 41 positioned around the guide rod 28 between the shoe and the rear support block 24. The longitudinal movement of the shoe 29 and teeth 30 is sufficient to advance each successive top sheet 9 to the feed rollers 19 which thereafter continue to feed each sheet while the shoe is returning to retracted position and while the dogs 36 are advanced by the chain 35 to commence another cycle of the machine. Power is applied to the drive shaft 3 from a suitable source by the flexible shaft 42.

The modified form of my machine illustrated in Figs. 9 and 10 operates on much the same principle as the first form of machine just described insofar as the sheet advancing and feeding mechanism is concerned. The modified machine includes longitudinal body rods 1A which support the bearing blocks 6A and transverse support rod 4A at their forward ends. A forward drive shaft 3A is journalled in the bearing blocks and carries feed rollers 19A which operate in the same manner as the before described feed rollers 19. Rearwardly of the transverse support rod 4A the rods 1A are connected to the transversely extending rod 20A with the depending locator pins 22A on the ends thereof. Still

further rearwardly the longitudinal rods 1A are adjustably secured to the rear support block 43. The block 43 corresponds somewhat in function to the support block 24 of the first form of the machine. In place of the fixed guide rod of the first form of my machine, the block 43 is bored longitudinally to slidably pass and support a piston rod 44. The piston rod is connected to a suitable piston within the hydraulic cylinder 45 secured to the forward face of the block 43. Hydraulic conduits 46—47 serve to admit hydraulic pressure to opposite ends of the cylinder to reciprocate the piston rod 44. The rear end of the piston rod 44 is longitudinally fixed to the base of the U-shaped shoe 48 while permitting relative rotation or tilting of the shoe about the axis of the piston rod. The shoe 48 carries the downwardly projecting teeth 49 similar to the teeth 30 on the shoe 29 in the first form of my machine.

The support of the rear end of the modified machine thus extends through the shoe 48 and piston rod 44 to the rear support block 43 and longitudinal rods 1A. Adancing motion of the shoe 48 and sheet engaging teeth 49 is accomplished hydraulically instead of mechanically and while the cylinder 45 is disclosed as double acting to retract the shoe it is quite obvious that the piston rod 44 could be spring retracted if desired. The rear guide fingers 50, which engage the rear side of the stack of sheets 9, are carried by laterally projecting ends of the rear support block 43 instead of on a separate crossbar as in the first form of the invention.

Both forms of my machine described above are supported at three points on the stack of sheets. The rear support, which is located centrally of the stack of sheets, is tiltable relative to the body of the machine so as to always mate with and engage the rear edge of the top sheet regardless of wrinkles or bends in the sheet. The continuously driven feed rollers on each form of the machine function to advance each sheet at a fixed predetermined lineal speed while the intermittently advanced shoes determine the frequency with which a sheet will be fed off of the top of the stack. A minor detail of my machine is that the rear edges of the teeth 30 and 49 are also desirably sharpened to knife edges so that in retracting across the top surface of a sheet they will shear off any feather edge or flange which may be present on the edge of the sheet and which might otherwise prevent complete retraction of the shoe and jaws.

Having thus described my invention, what I claim as new and desire to secure by Letters Patent is:

1. A machine for successively feeding the top sheet from a stack of metal sheets comprising, a pair of transversely spaced longitudinally extending rods, a drive shaft rotatably carried by the front ends of said rods and projecting transversely from each side thereof, a transversely extending support rod secured to said longitudinal rods to the rear of said shaft, bearing members transversely adjustably secured to said support rod and projecting forwardly therefrom, said bearing members having bearings formed in their forward ends receiving the ends of said shaft, supporting rollers having transversely curved rims secured to the inner sides of said bearing members rearwardly from and below said shaft and adapted to rest upon the top front edge of said stack of sheets, feed rolls carried by said shaft and extending downwardly to the plane of the bottom of said supporting rollers, pressure rollers yieldably mounted on said bearing members below said feed rollers and spring pressed upwardly toward said feed rollers, throat members vertically adjustably mounted on the inner sides of said bearing members below said support rollers to engage the front edges of the sheets in said stack below the top sheet of said stack, means for driving said drive shaft, a second transverse rod secured to said longitudinal rods rearwardly of said support rod, depending fingers transversely adjustably mounted on said second transverse rod and engageable with the sides of said stack, a rear support block secured transversely between said longitudinal rods and adjustable longitudinally therealong, a guide rod projecting rearwardly from said rear support block beyond the rear edge of said stack and thereabove, a forwardly opening U-shaped feed shoe longitudinally slidable on said guide rod and transversely rotatable thereabout, sheet engaging teeth projecting from the bottom of said shoe on each side of said guide rod, said teeth being no thicker than the thickness of a sheet to be fed, a rear stack guide longitudinally adjustably secured to said longitudinal rods and having fingers extending rearwardly and downwardly from its transverse ends to engage the rear of said stack, an idler sprocket and shaft carried by the rear ends of said longitudinal rods and therebetween, a drive sprocket secured to said drive shaft and aligned with said idler sprocket, a chain trained around said sprockets with its lower reach extending across the top of said shoe and said stack, dogs projecting outwardly from opposite sides of said chain, a pair of fingers pivotally mounted on the top of said shoe on each side thereof and having inwardly turned forward nose portions disposed in the path of said dogs, a release support bar mounted on said longitudinal rods for longitudinal adjustment therealong and having release fingers depending from the transverse ends thereof to alongside the path of movement of said shoe, release cams projecting laterally from said fingers and behind the pivots thereof to be engaged by said release pins, springs on said shoe and connected to said fingers to bias said fingers to dog engaging position, and a spring positioned around said guide rod between said shoe and said rear support block to return said shoe to its rearmost position.

2. A machine for successively feeding the top sheet from a stack of metal sheets comprising, a pair of transversely spaced longitudinally extending rods, a drive shaft rotatably carried by the front ends of said rods and projecting transversely from each side thereof, a transversely extending support rod secured to said longitudinal rods to the rear of said shaft, bearing members transversely adjustably secured to said support rod and projecting forwardly therefrom, said bearing members having bearings formed in their forward ends receiving the ends of said shaft, supporting rollers secured to the inner sides of said bearing members rearwardly from and below said shaft and adapted to rest upon the top front edge of said stack of sheets, feed rolls carried by said shaft and extending downwardly to the plane of the bottom of said supporting rollers, pressure rollers yieldably mounted on said bearing members below said feed rollers and spring pressed upwardly toward said feed rollers, throat members vertically adjustably mounted on the inner sides of said bearing

members below said support rollers to engage the front edges of the sheets in said stack below the top sheet of said stack, means for driving said drive shaft, a rear support block secured transversely between said longitudinal rods and adjustable longitudinally therealong, a guide rod projecting rearwardly from said rear support block beyond the rear edge of said stack and thereabove, a feed shoe longitudinally slidable on said guide rod and transversely rotatable thereabout, sheet engaging teeth projecting from the bottom of said shoe on each side of said guide rod, said teeth being no thicker than the thickness of a sheet to be fed, a rear stack guide secured to said longitudinal rods and having fingers extending downwardly to engage the rear of said stack, an idler sprocket and shaft carried by the rear ends of said longitudinal rods, a drive sprocket secured to said drive shaft and aligned with said idler sprocket, a chain trained around said sprockets with its lower reach extending across the top of said shoe and said stack, dogs projecting outwardly from opposite sides of said chain, a pair of fingers pivotally mounted on the top of said shoe on each side thereof and having inwardly turned forward nose portions disposed in the path of said dogs, a release support bar mounted on said longitudinal rods and having release fingers depending from the transverse ends thereof to alongside the path of movement of said fingers, springs on said shoe and connected to said fingers to bias said fingers to dog engaging position, and a spring positioned between said shoe and said rear support block to return said shoe to its rearmost position.

3. In a machine for successively feeding the top sheet from a stack of metal sheets, the combination of a body adapted to be disposed longitudinally across the top of said stack, laterally spaced support wheels for supporting the front of said body from the front of the stack, driven feed rolls at the front of said body and located forwardly of said support wheels for feeding a sheet forwardly, means at the rear of said body for successively advancing single sheets to said feed rolls, said means including a shoe slidable longitudinally of the body and having sheet engaging teeth on its under side, a support on which said shoe is slidable and transversely rockably connected with the rear of said body to support the rear of said body through said shoe and centrally of said stack, release fingers horizontally pivotally mounted on the top of said shoe, and a chain driven with said feed rolls and having dogs thereon longitudinally engageable with said fingers to periodically advance said shoe.

4. In a machine for successively feeding the top sheet from a stack of metal sheets, the combination of a body adapted to be disposed longitudinally across the top of said stack, laterally spaced supports for supporting the front of said body from the front of the stack, driven feed rolls at the front of said body and located forwardly of said supports for feeding a sheet forwardly, means at the rear of said body for successively advancing single sheets to said feed rolls, said means including a shoe slidable longitudinally of the body and having sheet engaging teeth on its under side, a supporting connection between said shoe and the rear of said body and permitting transverse rocking of said shoe, release fingers laterally movably mounted on the top of said shoe, and a chain mounted on said body and driven in timed relationship with said feed rolls and having dogs thereon longitudinally engageable with said fingers to periodically advance said shoe.

5. In a machine for successively feeding the top sheet from a stack of metal sheets, the combination of a body adapted to be disposed longitudinally across the top of and supported solely by said stack, depending guides on the edges of said body for laterally engaging said stack and retaining said body thereon, laterally spaced supports on said body for supporting the front of said body from the front of the stack, stops adjustably carried on the front of said body transversely inwardly of the guides on the sides of the body and spaced vertically below the level of said supports and coacting therewith to form a discharge throat of adjustable width along the front edge of said body, driven feed rolls mounted on the front of said body and located forwardly of said supports for feeding a sheet forwardly, means at the rear of said body for successively advancing single sheets through said throat to said feed rolls, said means including a shoe movable longitudinally of the body and having sheet engaging teeth on its under side, a supporting connection between said shoe and the rear of said body and permitting transverse rocking of said shoe, and drive means carried on said body and connected to said shoe to periodically advance said shoe.

6. In a machine for successively feeding the top sheet from a stack of metal sheets, the combination of a body adapted to be disposed longitudinally across the top of and supported solely by said stack, depending guides on the edges of said body for laterally engaging said stack and retaining said body thereon, laterally spaced supports on said body for supporting the front of said body from the front of the stack, stops adjustably carried on the front of said body transversely inwardly of the guides on the sides of the body and spaced vertically below the level of said supports and coacting therewith to form a discharge throat of adjustable width along the front edge of said body, driven feed rolls mounted on the front of said body and located forwardly of said supports for feeding a sheet forwardly, means at the rear of said body for successively advancing single sheets through said throat to said feed rolls, said means including a shoe movable longitudinally of the body and having sheet engaging teeth on its under side, a supporting connection between said shoe and the rear of said body and permitting transverse rocking of said shoe, and a fluid pressure cylinder and piston carried on said body and connected to said shoe to periodically advance said shoe.

7. In a machine for feeding sheets from the top of a stack of metal sheets the combination of a body, means for supporting the front of said body from the front of said stack, adjustable guides on said body engageable with the four sides of the stack, driven feed rolls on said body for advancing a sheet from the front of said stack, means for advancing the top sheet of the stack to said feed rolls including a shoe slidable longitudinally of said body and connected thereto to support the rear of said body from the rear of said stack and centrally thereof, transversely spaced sheet engaging jaws on the bottom of said shoe, said shoe being transversely rockable relative to said body, spring means biasing said shoe rearwardly, and means on said body for periodically advancing said shoe on said body, said advancing means comprising a rotatable

chain loop driven with said feed rolls and having dogs automatically releasably connected with said shoe through part of their travel.

8. In a machine for feeding sheets from the top of a stack of metal sheets the combination of a body, means for supporting the front of said body from the front of said stack, driven feed rolls on said body for advancing a sheet from the front of said stack, means for advancing the top sheet of the stack to said feed rolls including a shoe slidable longitudinally of said body and connected thereto to support the rear of said body from the rear of said stack and centrally thereof, a sheet engaging jaw on the bottom of said shoe, said shoe being transversely rockable relative to said body, spring means biasing said shoe rearwardly, and means on said body for periodically advancing said shoe on said body, said advancing means comprising a rotatable chain driven with said feed rolls and having a dog connectable with said shoe through part of its travel.

9. In a machine for feeding sheets from the top of a stack of metal sheets the combination of a body, means for supporting the front of said body from the front of said stack, driven feed rolls on said body for advancing a sheet from the front of said stack, means for advancing the top sheet of the stack to said feed rolls including a shoe slidable longitudinally of said body and connected thereto to support the rear of said body from the rear of said stack and centrally thereof, a sheet engaging jaw on the bottom of said shoe, spring means biasing said shoe rearwardly, and means on said body for periodically advancing said shoe on said body, said advancing means comprising a rotatable chain driven with said feed rolls and having a dog connectable with said shoe through part of its travel.

10. In a machine for feeding sheets from the top of a stack of metal sheets the combination of a body adapted to be freely supported entirely from the top of said stack, depending guides on the edges of said body for laterally engaging said stack and retaining said body thereon, means for supporting the front of said body from the front of said stack, stops adjustably carried on the front of said body transversely inwardly of the guides on the sides of the body and spaced vertically below the level of said supports and coacting therewith to form a discharge throat of adjustable width along the front edge of said body, driven feed rolls on said body for advancing a sheet from the front of said stack, means for advancing the top sheet of the stack through said throat to said feed rolls including a shoe slidable longitudinally of said body and connected thereto to support the rear of said body from the rear of said stack and centrally thereof, a sheet engaging jaw on the bottom of said shoe, and means on said body for periodically advancing said shoe on said body.

11. In a machine for feeding sheets from the top of a stack of metal sheets the combination of a body, means for supporting the front of said body from the front of said stack, driven feed rolls on said body for advancing a sheet from the front of said stack, means for advancing the top sheet of the stack to said feed rolls including a shoe slidable longitudinally of said body and connection thereto to support the rear of said body from the rear of said stack, a sheet engaging jaw on the bottom of said shoe, said shoe being transversely rockable relative to said body, and means on said body for periodically advancing said shoe on said body, said advancing means comprising a fluid pressure cylinder and piston connected between said shoe and said body and forming the supporting connection therebetween.

12. In a machine for feeding sheets from the top of a stack of metal sheets the combination of a body, means for supporting the front of said body from the front of said stack, driven feed rolls on said body for advancing a sheet from the front of said stack, means for advancing the top sheet of the stack to said feed rolls including a shoe slidable longitudinally of said body and connected thereto to support the rear of said body from the rear of said stack, a sheet engaging jaw on the bottom of said shoe, and means on said body for periodically advancing said shoe on said body, said advancing means comprising a fluid pressure cylinder and piston connected between said shoe and said body.

ROBERT J. VAN SCHIE.

REFERENCES CITED

The following references are of record in the file of this patent:

UNITED STATES PATENTS

Number	Name	Date
679,961	French	Aug. 6, 1901
1,033,951	Sargent	July 30, 1912
2,138,682	Storck	Nov. 29, 1938
2,197,036	Ford	Apr. 16, 1940