660642

SPRUSON & FERGUSON

AUSTRALIA

PATENTS ACT 1990

PATENT REQUEST: STANDARD PATENT

I/We, the Applicant(s)/Nominated Person(s) specified below, request I/We be granted a patent for the invention disclosed in the accompanying standard complete specification.

[70,71] Applicant(s)/Nominated Person(s):

Yasuhiro Mori, of 30-12, 4 Chome, Imizumidai, Kamakura-shi, Kanagawa, JAPAN

[54] Invention Title:

A Molding with Cutoff Performance for Concrete Structure

[72] Inventor(s):

Yasuhiro Mori

[74] Address for service in Australia:

Spruson & Ferguson, Patent Attorneys
Level 33 St Martins Tower
31 Market Street
Sydney New South Wales Australia (Code **SF**)

Details of Basic Application(s):

[31] Appl'n No(s):	[33] Country:	[32] Application Date:
3-45720	JP	20 February 1991

DATED this SEVENTH day of JANUARY 1992

Yasuhiro Mori

By: J. Spruson.

Registered Patent Attorney

IRN: 200810 INSTR CODE: 62724

SC26641 07/01/92

SPRUSON & FERGUSON

Australia

Patents Act 1990

NOTICE OF ENTITLEMENT

I, Yasuhiro Mori, of 30-12, 4 Chome, Imizumidai, Kamakura-shi, Kanagawa, Japan, being the Applicant/Nominated Person in respect of an application entitled:

A Molding with Cutoff Performance for Concrete Structure

state the following:-

The Applicant/Nominated Person is the actual inventor.

The Applicant/Nominated Person is the applicant of the basic application listed on the Patent Request. The basic application listed on the Patent Request is the application first made in a Convention Country in respect of the invention.

DATED this 16th day of January 1992

Yasuhiro Mori

.....

Yasuhiro Mori

IRN: 200810

INSTR CODE: 62724

LHP:7360D

AU9210103

(12) PATENT ABRIDGMENT (11) Document No. AU-B-10103/92
(19) AUSTRALIAN PATENT OFFICE (10) Acceptance No. 660642

(54) Title
A MOLDING WITH CUTOFF PERFORMANCE FOR CONCRETE STRUCTURE

International Patent Classification(s)
(51)[5] B29C 059/02 E04G 009/10

(21) Application No. : 10103/92 (22) Application Date : 07.01.92

(30) Priority Data

(31) Number	(32) Date	(33) Country
3-45720	20.02.91	JP JAPAN

(43) Publication Date : 27.08.92

(44) Publication Date of Accepted Application : 06.07.95

(71) Applicant(s)
YASUHIRO MORI

(72) Inventor(s)
YASUHIRO MORI

(74) Attorney or Agent
SPRUSON & FERGUSON , GPO Box 3898, SYDNEY NSW 2001

(56) Prior Art Documents
US 4558875
US 3865779
US 3406087

(57) Claim

1. A moulded sealing plate for concrete structures, comprising a thermoplastic resin as a matrix and a particulate substance having a melting point which is higher than the melting point of the matrix, characterized in that the matrix resin has embossed surfaces on both faces thereof, and that the embossed surfaces are coated with a hydrophilic layer of a surfactant.

7. A process for manufacturing a sealing plate according to claim 1, comprising the steps of preparing a stock material comprising a thermoplastic resin as a matrix, a particulate substance which does not melt at the melting point of the matrix and a surfactant, heating that stock material to the melting point of the matrix and extruding the stock material from a molding die to form the embossed surfaces on both faces of the resin molding by utilizing the difference in the flowability between the matrix resin and the particulate substance, whereby the embossed surfaces are coated with a hydrophilic layer of the surfactant.

660642 S & F Ref: 200810

AUSTRALIA

PATENTS ACT 1990

COMPLETE SPECIFICATION

FOR A STANDARD PATENT

ORIGINAL

Name and Address of Applicant: Yasuhiro Mori
30-12, 4 Chome
Imizumidai
Kamakura-shi Kanagawa
JAPAN

Actual Inventor(s): Yasuhiro Mori

Address for Service: Spruson & Ferguson, Patent Attorneys
Level 33 St Martins Tower, 31 Market Street
Sydney, New South Wales, 2000, Australia

Invention Title: A Molding with Cutoff Performance for Concrete Structure

The following statement is a full description of this invention, including the best method of performing it known to me/us:-

S P E C I F I C A T I O N

TITLE OF THE INVENTION

A MOLDING WITH CUTOFF PERFORMANCE FOR CONCRETE STRUCTURE

BACKGROUND OF THE INVENTION AND RELATED ART STATEMENT

The present invention relates to a molding with cutoff performance that can be used as a cutoff plate or the like for concrete structures by placing the same at the joints of a concrete structure to prevent water seepage.

After pouring and curing of concrete during construction of concrete structures in general, concrete is likely to undergo cracking due to internal stresses caused by changes in the ambient temperature, humidity, pressure and the like. To prevent this, the structure to be poured with concrete is divided into sections of a suitable length with a joint in between each sections. These joints, however, may permit seepage of water such as rain and groundwater into the structure. As one of the most popular means to prevent cracking of concrete as well as water seepage into concrete, cutoff plates of metal, rubber or synthetic resin are embedded in the concrete along the length of the joint at the time of pouring concrete to ensure water sealing performance thereof.

Among such cutoff plates, those made of metal lack both ductility and elasticity, such that they cannot accommodate themselves to volume changes in the poured concrete and gaps easily develop between the poured concrete and the cutoff plate.

Cutoff plates made of a molding with cutoff performance and comprising rubber or synthetic resin, on the other hand, are advantageous in that because of their high elasticity, they are more accommodating to volume changes in the concrete and to displacements at the joints. As disclosed in JPA laid-open Hei 1-284640 and JUMA laid-open Sho 1-131406, cutoff plates of this type generally comprise a plate made of elastomer and the like provided with a cylindrical or pyramidal portion in the longitudinal direction at the center and a flange each on both edges which is thicker than the plate to ensure firm engagement with the concrete. Said cylindrical or pyramidal portion of the cutoff plate absorbs the external changes such as displacement of concrete at the joints, while the flanges on both edges with their firm engagement with the concrete prevent water seepage.

Cutoff plates made of a rubber-base molding are defective in that despite their elasticity, they easily deteriorate with time due to aging, and after certain period of use, they no longer function as a cutoff plate.

Cutoff plates made of a molding comprising synthetic

resin such as polyvinyl chloride and ABS resin are defective in that because the plate surface is inevitably made smooth at the stage of molding, adhesion between the plate surface and the concrete tends to decrease, although in this case the problem of deterioration does not accompany. For these reasons, the prior art cutoff plates made of a molding comprising synthetic resins are provided with flanges on both edges of the plate to improve the engagement with the concrete as well as to prevent seepage. In that sense, the prior art cutoff plates depend exclusively on the geometric features such as flanges to improve their engagement with the concrete.

Instead of relying on the flanges provided on both edges of the cutoff plate to improve engagement with the concrete as mentioned above, it is also proposed, as disclosed in JPA laid-open Sho 62-90455, to partly employ on the plate surface a water-swellable material made of water absorbent resin. However, the water-swellable material merely plugs the gap between the cutoff plate and the concrete as it swells by coming in contact with water seeped in said gap, and it fails to cause the concrete to become adhered to the cutoff plate.

Because synthetic resin plates hardly become bonded with the concrete, the prior art cutoff plates made of synthetic resins were provided with flanges on both edges to improve their engagement with the concrete as well as

watertight performance. However, it was conceived to improve this engagement between the plate and the concrete by forming the entire surface of the plate irregular instead of using the flanges which provide only partial engagement. The newly proposed method may not offer adhesion by chemical fusion between the synthetic resin plate and the concrete but will significantly improve the water sealing property by causing the entire surface of the plate to uniformly come in contact with the concrete.

As one possible means to form a rugged surface on the synthetic resin plate which constitutes the base of a cutoff plate, the resin plate may be passed through embossing rolls immediately after molding. Although this is applicable when the cutoff plate is flat, a cutoff plate with special configuration such as those provided with cylindrical portions or with flanges cannot be passed through the embossing rolls, as these projecting portions would get in the way and the plate cannot be treated for rugged finish on its entire surface.

To overcome these problems, it was proposed to spray the surface of such cutoff plate with an adhesive and to sprinkle with siliceous sand over the adhesive. This is also defective in that it requires additional means to sprinkle the siliceous sand and does not offer an adequate solution in view of cost and efficiency. Further, the rugged surface alone cannot help the concrete to adhere to

the plate because the resin material has a water repelling property and thus prevents the cement milk from adequately entering and filling the dents in the rugged surface. The effect of the rugged surface is therefore somewhat offset.

SUMMARY OF THE INVENTION

The present invention aims to solve the problems encountered in the prior art cutoff plates made of synthetic resins, and to provide a molding for obtaining a cutoff plate or the like whose surface can be efficiently made rugged at the stage of producing said molding without relying on a secondary post-molding process and whose rugged surface acts to improve the adhesion between the cement milk and the plate.

As a specific means to realize these objects, the present invention is characterized in that a starting stock material comprising a thermoplastic resin such as polyethylene as the matrix, a particulate substance which has a higher melting point than the matrix or which does not melt at the melting point of said matrix such as crosslinked polyethylene resin or an inorganic particulate substance such as sand, and a surfactant is passed through a molding die of a heating and extrusion molding machine at the melting point of said matrix resin to form a resin molding having embossed rugged surfaces both on the front and the back faces by utilizing the difference in the flow

viscosity of the matrix resin and the non-moulting particulate substance, and that a hydrophilic coating layer is formed with said surfactant on top of the thus formed rugged surfaces.

Accordingly, there is provided according to a first embodiment of the invention a moulded sealing plate for concrete structures, comprising a thermoplastic resin as a matrix and a particulate substance having a melting point which is higher than the melting point of the matrix, characterized in that the matrix resin has embossed surfaces on both faces thereof, and that the embossed surfaces are coated with a hydrophilic layer of a surfactant.

There is provided according to a second embodiment of the invention a process for manufacturing a sealing plate according to the first embodiment, comprising the steps of preparing a stock material comprising a thermoplastic resin as a matrix, a particulate substance which does not melt at the melting point of the matrix and a surfactant, heating that stock material to the melting point of the matrix and extruding the stock material from a molding die to form the embossed surfaces on both faces of the resin molding by utilizing the difference in the flowability between the matrix resin and the particulate substance, whereby the embossed surfaces are coated with a hydrophilic layer of the surfactant.

The stock material for preparing the molding with cutoff performance according to the present invention comprises 60 ~ 70 wt% of a thermoplastic resin as the matrix, 30 ~ 40 wt% of a non-melting particulate substance, 0,3 ~ 10 wt% of surfactant, and preferably 67 wt% of the matrix resin, 30 wt% of non-melting particulate substance and 3 wt% of surfactant, provided that the total weight percentage does not exceed 100 weight %.

Embossed rugged surfaces to be formed on both the front and the back of a resin plate to be molded become too rugged if the ratio of matrix resin as against that of non-melting particulate substance is too large, making it impossible for the cement milk to adequately enter and fill the dents on the embossed surfaces. This may leave air bubbles in the gap between the resin plate and the concrete. The ratio of non-melting particulate substance as against matrix resin is preferably less than half that of matrix so that the adequate ruggedness of the surface can be maintained.

The surfactant contained in the stock material for molding the resin plate forms a hydrophilic coating layer on the embossed rugged surface, and whereby the contact between the cement milk and the resin plate is positively

AUSTRALIAN PATENT OFFICE

enhanced to allow the cement milk to adequately enter and fill the dents on the surface. This results in firm bonding between the cutoff plate and the concrete.

BRIEF DESCRIPTION OF THE DRAWINGS

Other objects and advantages of this invention will become apparent when taken in conjunction with description herebelow of some embodiments shown in the accompanying drawings.

Fig. 1 is a partial perspective view to show the construction of a cutoff plate made from the molding according to one embodiment of the present invention.

Fig. 2 is a partial enlarged sectional view along the line II-II in Fig. 1.

Fig. 3 is a sectional view to show the process of forming the molding with cutoff performance according to the present invention.

Fig. 4 is a perspective view to show how the cutoff plate shown in Fig. 1 is used.

Fig. 5 is a perspective view to show another example of how the cutoff plate is used.

Fig. 6 is a perspective view to show another embodiment of a cutoff plate made from the molding of the present invention.

Fig. 7 is a perspective view to show another mode of use of the cutoff plate as a variation of that shown in Fig. 5.

DETAILED DESCRIPTION OF THE PREFERRED EMBODIMENTS

Preferred embodiments of the cutoff plate made from the molding of the present invention will now be described referring to the accompanying drawings. As shown in Fig. 1, a cutoff plate 1 is an elongated plate made from a molding with cutoff performance obtained by extrusion-molding a synthetic resin composition and has embossed surfaces 3 on both faces with plural dents. The cutoff plate 1 has a given width W suitable for the plate to be placed at a joint 21 of a concrete structure 20. Its entire surface 2 is preferably corrugated in the longitudinal direction thereof, and one or more ridges 5 are provided on both edges of the plate 1 extending in the longitudinal direction thereof, as shown in Fig. 4. The embossed surface 3 each is coated with a hydrophilic layer 4, as shown in Fig. 2.

The staring stock material for forming the molding for the cutoff plate 1 comprises, for example, a matrix of thermoplastic resin 6 such as polyethylene resin, a non-melting particulate substance 7 such as crosslinked polyethylene resin which has a higher melting point than said matrix resin 6 and which is difficult to melt at the melting temperature condition of the matrix resin 6, and a surfactant 8. The stock material is subjected to extrusion-molding in an extruder 9 shown in Fig. 3 to be molded into a product such as shown in Fig. 1.

As a method to give embossed surfaces 3 on both faces of a product such as the molding with cutoff performance according to the present invention, a method for extrusion-molding synthetic resins is disclosed in the Japanese Patent No. 1566160 (Japanese Patent Publication Hei 1-49100) granted to the inventors of this application. The method for manufacturing moldings according to said patent is characterized in that a particulate synthetic resin of polymeric compound as the main component and a particulate synthetic resin obtained by pulverizing a composition of crosslinked resin as an additive are mixed by stirring and heated to a molten state at a given temperature, the mixture of thus-obtained resins is placed into a die and made to conform to a given configuration, the mixture of thus-conformed resins is extruded from the die by releasing the molding pressure, whereupon the molding is provided with embossed surfaces as a result of difference in the flow viscosity of each resin material caused by the difference in their melting points.

The molding with cutoff performance according to the present invention is molded from a stock material which comprises polyethylene, polypropyrene, polyvinyl chloride or the like as the matrix resin of polymeric compound, a non-melting inorganic particulate substance such as the crosslinked polyethylene resin, siliceous sand, crushed glass, fly ash and the like, and an ester of fatty acid as

the ionic surfactant or block polymer or the like such as polyethylene oxide or polypropyrene oxide as the nonionic surfactant. Among said components, polyethylene resin, crosslinked polyethylene resin and higher ester of fatty acid are preferably used as the matrix resin, non-melting particulate substance and surfactant, respectively. The stock material for molding preferably contains 63 wt% of polyethylene resin, 30 wt% of crosslinked polyethylene and 0.3 wt% of surfactant such as a higher ester of fatty acid.

When the stock material is subjected to pressurization in an extrusion molder 9 while being heated to about 190°C to melt, the matrix resin 6 would become molten first at 120°C. Because of a higher melting point than that of the matrix or because of the non-melting nature, the non-melting particulate substance 7 will not be totally melted, and the surface of unmelted particles 7 becomes enveloped by said molten surfactant 8 and the matrix resin 6. The molten mixture containing such particles is charged into a die 10 maintained at about 150°C and molded into a given configuration.

The molten mixture inside the molding die 10 contains the fully molten and highly fluid matrix resin 6 and the particles of the non-melting substance 7 which is soft due to heating but is not fully molten or not molten at all and thus is less fluid. As a result, when the molten

matrix is extruded into the air from the die 10, the resin contained in the inner side of the molder 9 flows out with a relative ease under the extrusion force of the molder 9. However, at positions nearer toward the outer side, said less fluid non-melting particulate substance 7 is in contact with the inner peripheral surface of the die 10 when being extruded. This makes it more difficult for the resin 7 to flow because of the friction and resistance of the die 10. In other words, because of difference in the flowability between the resins on the inner side and that on the outer side of the die 10, the resin on the outer side does not come out smoothly from the orifice, leaving rugged embossed surface 3 on the molded product.

The surfactant 8 contained in the stock material becomes well mixed with the resins during agitation inside the molder 9 and would seep and form said hydrophilic coating layer 4 which would not repel water on the embossed surface 3 when the stock material is extruded from the die 10. In Fig. 2, the hydrophilic layer 4 is shown as if it forms an independent layer on the embossed surface 3. In reality, however, the hydrophilic coating 4 is not a thick layer which would fill the dents of the embossed surface 3 but is a very thin layer and therefore, would not impair the function or the shape of the embossed surface 3 on the molding with cutoff performance to be used as the cutoff plate 1.

The molding with cutoff performance is obtained in the form of a continuous sheet 1a by extrusion molding using the die 10. Before the sheet 1a is completely cooled, it is passed through a corrugating conveyor 11 comprising upper conveyor rollers 12 and lower conveyor rollers 13 in a staggered arrangement to corrugate the sheet 1a. While the sheet 1a travels for a given distance through the rollers, it is gradually cooled and hardened to obtain the cutoff plate 1.

When the content of the non-melting particulate substance 7 is less than half the content of the matrix resin 6, the ruggedness of the embossed surface 3 becomes relatively low, such that when the cement milk is adhered on the embossed surface 3, the air bubbles contained in the cement milk are less likely to remain in the dents of the embossed surface 3. This is preferable because the concrete will adequately adhere on the surface of the cutoff plate 1.

The hydrophilic coating layer 4 to be formed on the embossed surface 3 acts to reduce the surface tension of the cutoff plate 1 made from the molding with cutoff performance, to thereby suppress water repellency unique to resin products in general. When the cement milk contacts the embossed surface 3 covered with the hydrophilic coating layer 4, the hydrophilic layer 4 actively causes the water content of the cement milk to be

adsorbed in the dents of the irregular embossed surface 3 as well as acts to remove the air bubbles formed in the cement milk. As the cement milk infiltrates into the embossed surface 3 via the hydrophilic layer 4 and becomes adequately bonded with the surface 3, the concrete layer becomes locked and bonded with the cutoff plate 1 on its rugged surface. Moreover, because the contact area is significantly increased, adhesion of concrete is further enhanced.

Corrugation of the cutoff plate 1 is expected to further improve adhesion of concrete to the embossed surface 3 because of its increased surface area in addition to said improved adhesion brought about by the embossed surface 3. The cutoff plate 1 will exhibit high resistance to displacement at the concrete joint. The ridges 5 continuously provided in the longitudinal direction of the plate 1 on both edges will enhance engagement of the plate 1 with the concrete together with the adhesion on the surface of the plate 1. The ridges also act to cut off water seepage.

As one example of use of the cutoff plate 1 according to the present invention, the plate can be disposed horizontally at a joint 21 of a concrete structure 20, as shown in Fig. 4. Alternatively as shown in Fig. 5, the plate 1 can be vertically placed at a joint 31 of a concrete structure 30. Referring to Fig. 5, the cutoff

plate 1 is vertically pressed into freshly poured concrete 32 to the mid point of its height. After this lower portion 32 of concrete is hardened, the upper portion 33 of concrete is poured. Fig. 7 shows a modification of Fig. 5. Prior to freshly pouring the lower portion 32 of concrete, the cutoff plate 1 provided with holes 34 on both edges is suspended by a wire 35 each to the correct position. Upon positioning of the plate 1, the lower portion 32 of concrete is poured and hardened before the upper portion 33 of concrete is poured. When compared with the method of Fig. 5 wherein the cutoff plate 1 is pressed into the fresh concrete 32, the method shown in Fig. 7 is more effective as the plate 1 can be placed more accurately at the joint.

Although the present invention has been described with respect to an embodiment having corrugated configuration, the cutoff plate 1 need not have a corrugated structure so long as its surface is embossed and coated with a hydrophilic layer. The cutoff plate 1 may be a flat sheet without corrugation such as shown in Fig. 6. The cutoff plate 1 may also be a flat sheet provided with ridge-like projections at a given interval. Because the molding with cutoff performance according to the present invention is intended to prevent water seepage by virtue of its improved bonding with concrete, it can be used in any other forms in addition to said cutoff plate so long

as it is used for such purposes. For example, it can be applied by means of an adhesive to various metal products such as steel pipe that are embedded in concrete to protect such products against corrosion.

The claims defining the invention are as follows:

1. A moulded sealing plate for concrete structures, comprising a thermoplastic resin as a matrix and a particulate substance having a melting point which is higher than the melting point of the matrix, characterized in that the matrix resin has embossed surfaces on both faces thereof, and that the embossed surfaces are coated with a hydrophilic layer of a surfactant.

2. A sealing plate according to claim 1, characterized in that the matrix resin comprises a polyethylene resin and the particulate substance comprises particles of crosslinked polyethylene which has a higher melting point than the matrix resin.

3. A sealing plate according to claim 2, characterized by comprising 60 ~ 70 weight % of matrix polyethylene resin, 30 ~ 40 weight % of particles of crosslinked polyethylene resin, and 0,3 ~ 10 weight % of an ester of fatty acid, provided that the total weight percentage does not exceed 100 weight %.

4. A sealing plate according to claim 1, characterized by comprising a polyethylene resin as the matrix material, and inorganic particles such as sand as the particulate substance.

5. A sealing plate according to any of the claims 1 to 4, characterized in that the sealing plate is formed as a continuous resin sheet which is provided with transverse corrugations, and has one or more continuous ridges provided on both edges of the sheet in the longitudinal direction.

6. A sealing plate according to any of the claims 1 to 4, characterized by being formed as a continuous flat resin sheet having one or more continuous ridges provided on both edges of the sheet in the longitudinal direction.

7. A process for manufacturing a sealing plate according to claim 1, comprising the steps of preparing a stock material comprising a thermoplastic resin as a matrix, a particulate substance which does not melt at the melting point of the matrix and a surfactant, heating that stock material to the melting point of the matrix and extruding the stock material from a molding die to form the embossed surfaces on both faces of the resin molding by utilizing the difference in the flowability between the matrix resin and the particulate substance, whereby the embossed surfaces are coated with a hydrophilic layer of the surfactant.

8. A process according to claim 7, characterized by using a stock material comprising a polyethylene resin as the matrix and particles of crosslinked polyethylene resin as the particulate substance.

9. A process according to claim 8, characterized by using a stock material comprising 60 ~ 70 weight % of matrix polyethylene resin, 30 ~ 40 weight % of particles of crosslinked polyethylene resin, and 0,3 ~ 10 weight % of an ester of fatty acid.

10. The process according to claim 7 or 8, characterized by using a stock material comprising a polyethylene resin as the matrix resin and inorganic particulate substance such as sand as the particulate substance.

AUSTRALIAN PATENT OFFICE

11. A process according to any of the claims 7 to 10, characterized by forming the sealing plate as a continuous resin sheet, corrugating the sheet by forming transverse corrugations and forming one or more continuous ridges on both edges of the sheet in the longitudinal direction.

12. The process according to any of the claims 7 to 10, characterized by forming said sealing plate as a flat continuous resin sheet and providing one or more continuous ridges on both edges of the sheet in the longitudinal direction.

13. A moulded sealing plate for concrete structures, comprising a thermoplastic resin as a matrix and a particulate substance having a melting point which is higher than the melting point of the matrix, which sealing plate is substantially as herein described with reference to Fig. 1, Fig. 1 and Fig. 2, Fig. 3, Fig. 4, Fig. 5, Fig. 6 or Fig. 7.

14. A process for manufacturing a sealing plate, which process is substantially as herein described with reference to Fig. 1, Fig. 1 and Fig. 2, Fig. 3, Fig. 4, Fig. 5, Fig. 6 or Fig. 7.

Dated 27 April, 1995
Yasuhiro Mori
Patent Attorneys for the Applicant/Nominated Person
SPRUSON & FERGUSON

AUSTRALIAN PATENT OFFICE

A MOLDING WITH CUTOFF PERFORMANCE FOR CONCRETE STRUCTURE

ABSTRACT

A molding with cutoff performance used as a cutoff plate (1) of synthetic resin and the like which is to be placed at joints of a concrete structure is formed by extrusion-molding a stock material comprising a thermoplastic resin (6) as the matrix, a particulate substance which does not melt at the melting point of said matrix such as crosslinked polyethylene resin (6) or inorganic particles (7) such as sand, and a surfactant (8) using a means for heating and for extrusion molding at the melting point of the matrix resin to provide an embossed surface (3) on both faces of the molding by utilizing the difference in flowability between the matrix and the non-melting particulate substance. Further, a hydrophilic layer (4) of said surfactant (8) is formed on the embossed surfaces (3), so that concrete would adhere to the embossed surface (3) and become well bonded thereto because of the hydrophilic property of the layer (4), improving engagement of concrete with the cutoff plate (1) as the cement milk is firmly engaged into the dents of the embossed surface (3).

Fig. 2

LHP:7372D

FIG. 1

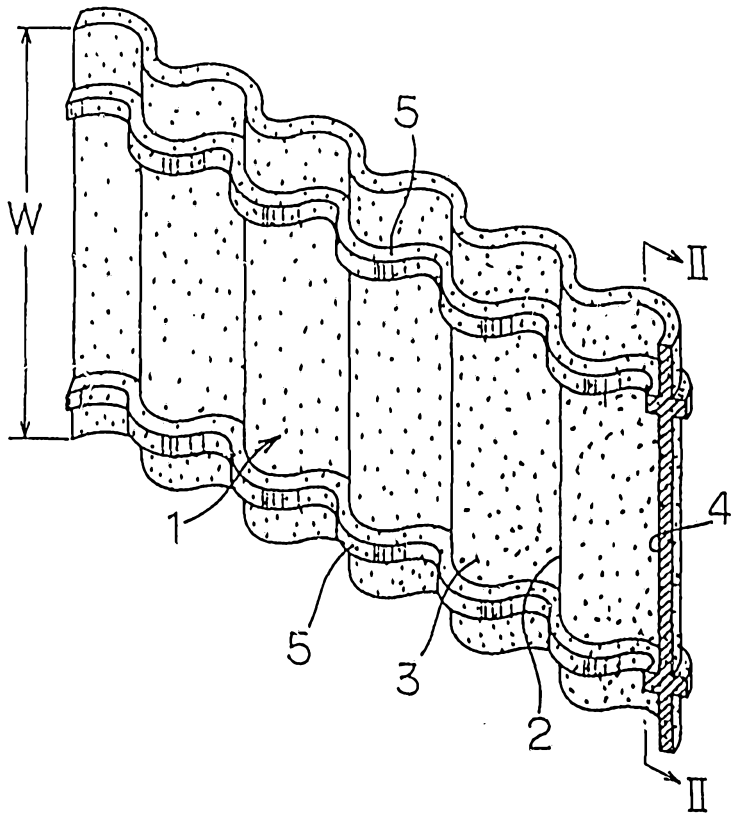

FIG. 2

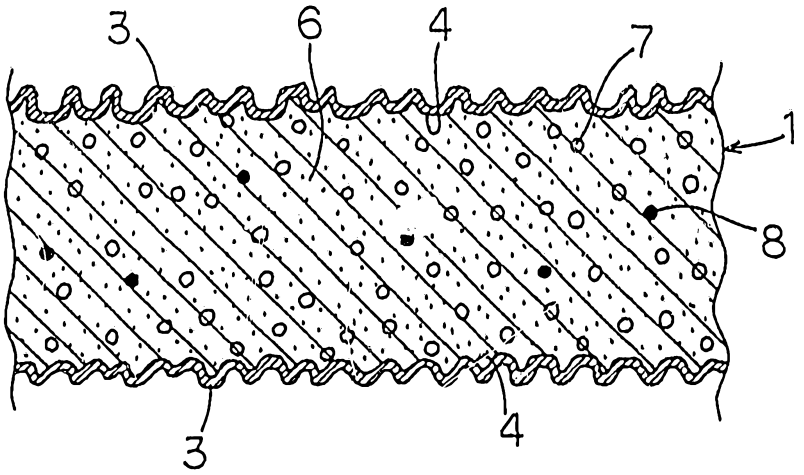

FIG. 3

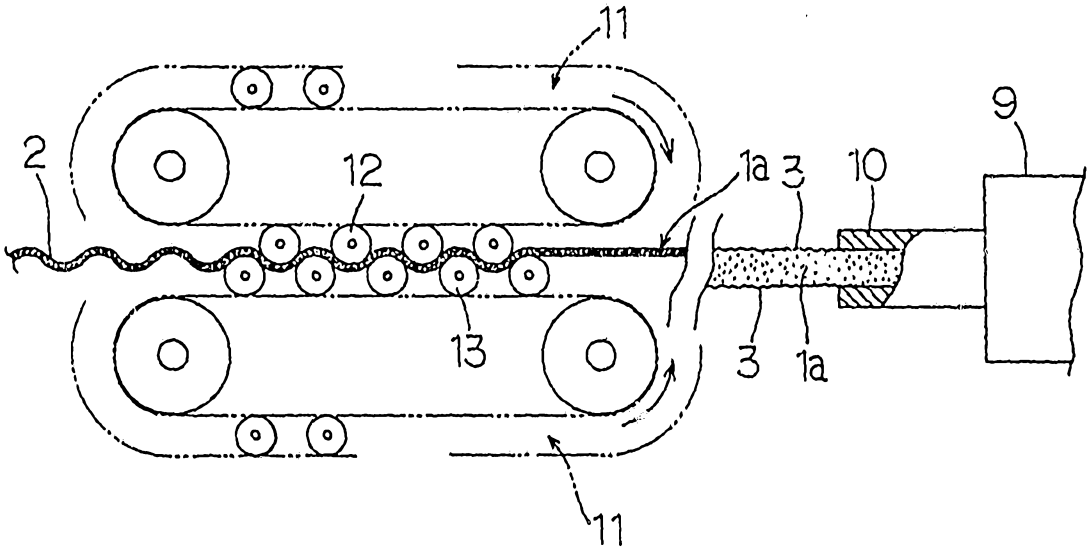

FIG. 4

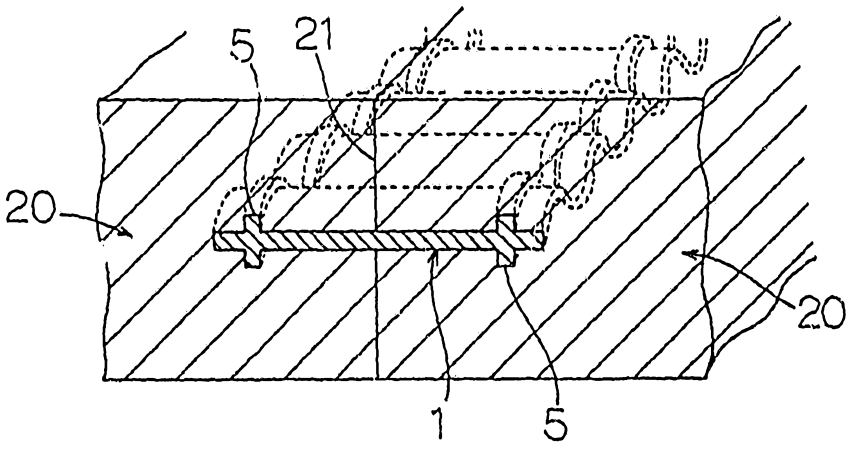

FIG. 5

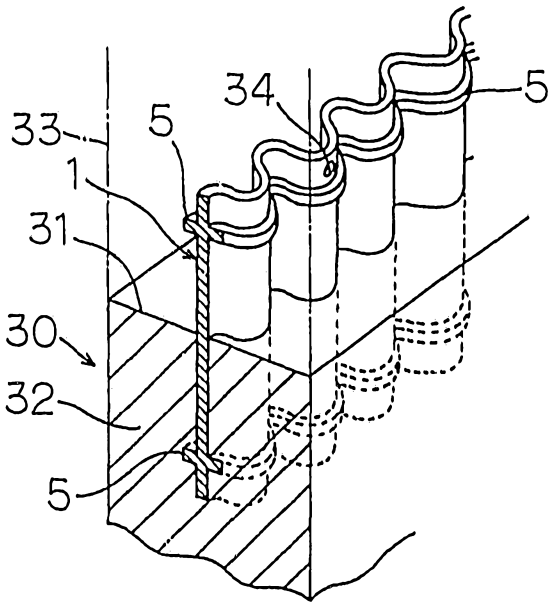

FIG. 6

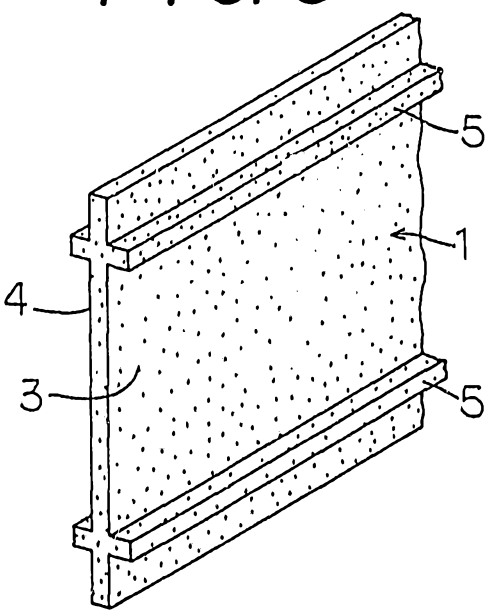

FIG. 7

