Oct. 24, 1950 E. R. MILLEN 2,527,023

ELECTRIC IMPULSE COUNTER

Original Filed May 11, 1944 3 Sheets-Sheet 1

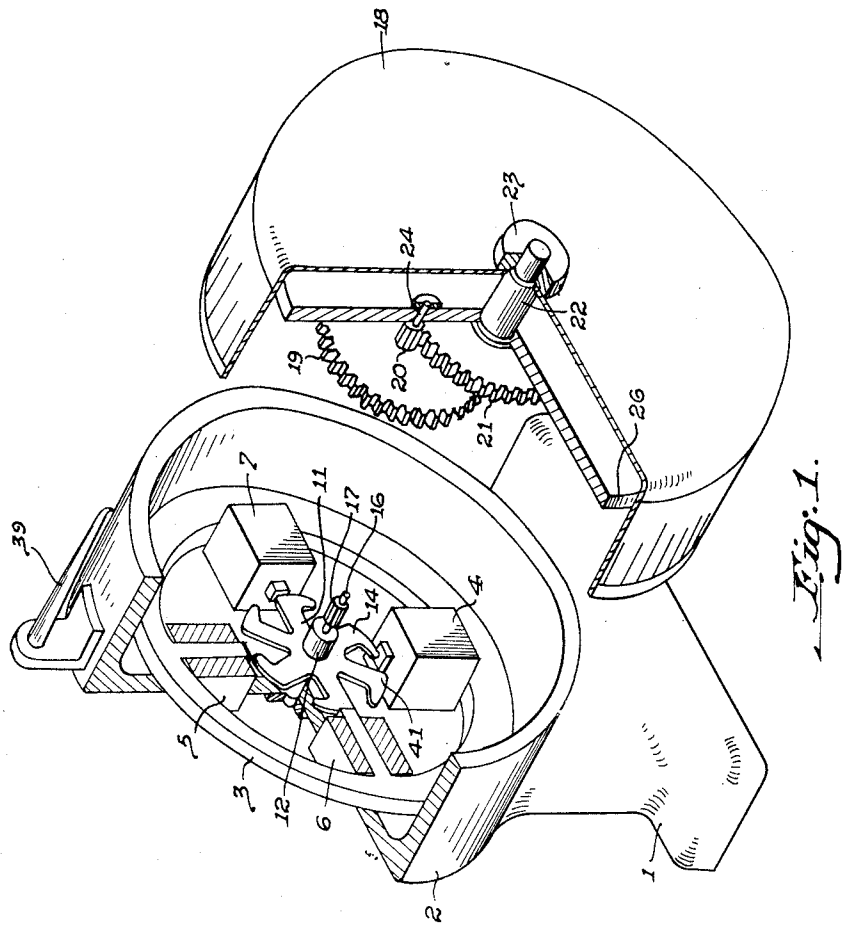

Fig. 1.

INVENTOR.
EDWIN R. MILLEN.

BY
Brown, Critchlow, Flick & Peckham
HIS ATTORNEYS.

WITNESSES.
E. J. Maloney.
E. O. Johns.

Oct. 24, 1950 E. R. MILLEN 2,527,023

ELECTRIC IMPULSE COUNTER

Original Filed May 11, 1944 3 Sheets-Sheet 2

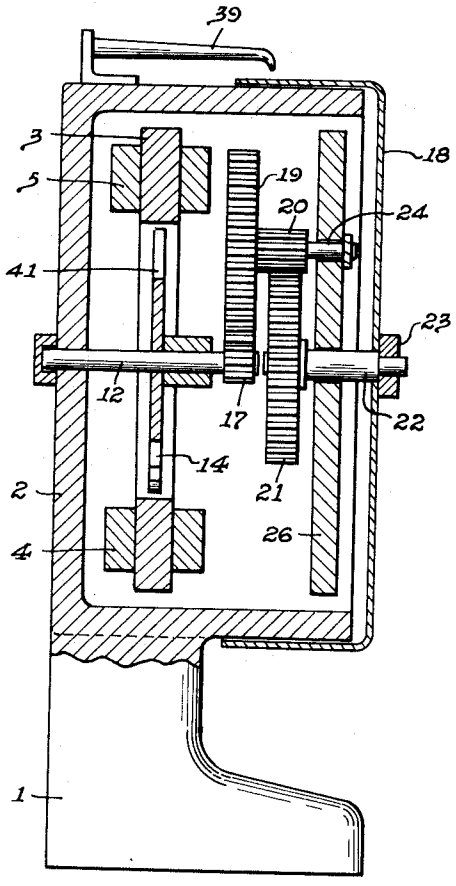

Fig. 2.

WITNESSES.
E. J. Maloney.
E. O. Johns

INVENTOR.
EDWIN R. MILLEN.

BY
Brown, Critchlow, Flick & Peckham
his ATTORNEYS.

Oct. 24, 1950 E. R. MILLEN 2,527,023

ELECTRIC IMPULSE COUNTER

Original Filed May 11, 1944 3 Sheets-Sheet 3

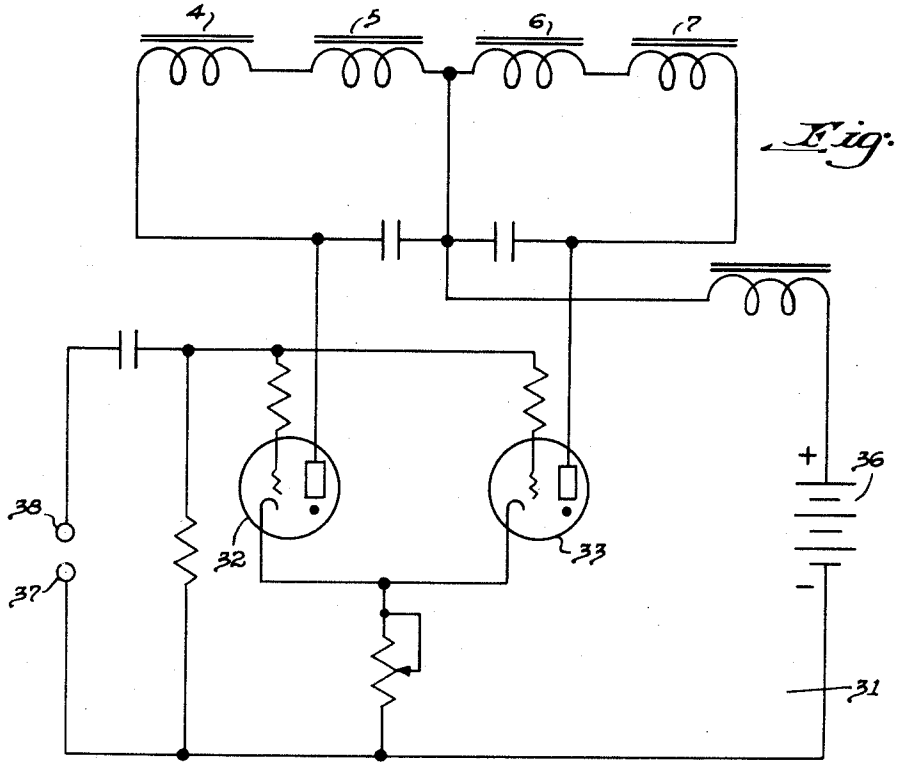

Fig. 3.

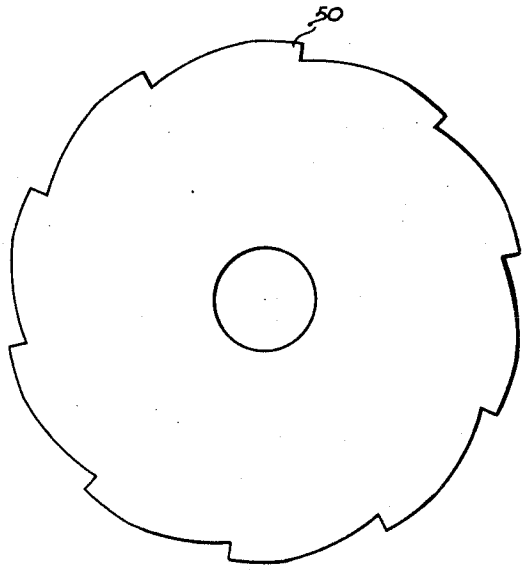

Fig. 4.

INVENTOR.
EDWIN R. MILLEN.

BY
Brown, Critchlow, Flick & Peckham
his ATTORNEYS.

WITNESSES.
E. J. Maloney.
E. O. John.

Patented Oct. 24, 1950

2,527,023

UNITED STATES PATENT OFFICE

2,527,023

ELECTRIC IMPULSE COUNTER

Edwin R. Millen, McCandless Township, Allegheny County, Pa., assignor to Fisher Scientific Company, Pittsburgh, Pa., a corporation of Pennsylvania

Original application May 11, 1944, Serial No. 535,156. Divided and this application June 26, 1946, Serial No. 679,531

3 Claims. (Cl. 235—92)

1

This invention relates to electrical impulse counting devices. Although the devices are of general utility for the counting of electrical impulses, they are particularly adapted for use with the method of and apparatus for spectographic analysis shown and described in a copending application, Serial Number 535,156, filed May 11, 1944, of which this application is a division. This application has since matured into Letters Patent 2,446,874, issued August 10, 1948.

Insofar as I am aware, the known counting devices essentially comprise a relay or solenoid actuated by the pulsating current to be measured and an escapement or other mechanism operatively connected to the counter arm. Such devices present serious deficiencies which, at least to a large extent, the present invention overcomes. Among these is the fact that in a high speed mechanical escapement, a large number of light parts are required to translate the linear motion of the relay to the rotary motion of the counter arm with the result that the small surfaces of these parts wear rapidly and soon cause inaccuracies in the counting. Also, the large number of mechanical parts may result in a lagging of the counting indication behind the energy impulses and this lag produces inaccuracies, particularly when counting high speed inputs, or when taking a random count of impulses which might vary instantaneously from a pulse rate of one per second to one of fifty per second. Further, the lightness of the material required for high speed operation limits the travel of the counter arm to small magnitudes, thereby limiting the load that the counting devices can carry and necessitating the use of small counter scales which are difficult to read. Another disadvantage also related to the mechanical escapement is that certain signals, due to their wave shape occasionally fail to activate the relay of the device.

Accordingly, it is an object of this invention to provide an impulse counting device that is of simple and rugged construction, effects immediate translation of each input impulse into properly indexed rotary motion, responds promptly and accurately to widely varying impulse rates, affords adequate power to permit wear resisting construction and the operation of easily read scale means, and avoids or reduces the aforementioned disadvantages.

Other objects will appear hereinafter.

In accordance with this invention, a counting device for measuring pulsating energy is provided which comprises a motor having at least two electrically opposed pole pieces or electromagnets disposed in the same plane and a specially formed rotor, described more in detail hereinafter, mounted in the plane of the pole pieces. Preferably, geometrically opposed pairs of pole pieces are provided, the pairs of which are energized and de-energized successively by an electronic switch or "trigger" circuit, such as a form of the familiar Eccles-Jordan "trigger" circuit, which connects opposed pairs of the pole pieces successively to the source of energy.

2

The rotor provided by the invention has an even number of uniformly spaced and diametrically opposed arms each of which is provided at its end with a shoulder which projects laterally in the direction of rotation of the rotor and which progressively decreases in cross sectional area in that direction. Pulse counting mechanism is operated by the rotor for recording the counts represented by the individual movements of the rotor, e. g., a finger that moves over a calibrated dial or a calibrated dial that is moved with reference to an index mark. It is preferred to use a drum or disc type counter the size of which is limited only by the power used to rotate the rotor.

With this arrangement of parts, an impulse from the source of energy flows through the trigger circuit and energizes one pair of pole pieces to attract the rotor arms to it and simultaneously de-energizes other poles. The de-energization permits the arms to move to the energized poles and be locked there. The next impulse reverses this action by energizing the next succeeding pair of pole pieces and de-energizing the previously energized pair. The shaping of the arms results in a rotation in one direction only, i. e., in the direction toward which the progressively decreasing shoulder projects. Thus, the rotor and the counter means actuated by it are rotatably indexed by each succeeding impulse in one direction, and an accurate count of impulses is conveniently achieved.

Referring now to the drawings, Fig. 1 is a perspective, exploded front view of one form of motor provided by the invention, with associated operating mechanism, certain portions being cut away to show underlying parts; Fig. 2 is a section taken along the vertical diameter of an assembled motor housing, motor and counter, the rotor arms being in the position in which they are shown in Fig. 1; Fig. 3 is a wiring diagram of the electric switch; and Fig. 4 is a front elevation of one permissible alternate form of the rotor.

In the preferred embodiment shown by the drawings, a standard 1 supports a housing 2,

suitably of cast aluminum, which holds a motor stator. The stator has a soft iron ring 3 on which are mounted a pair of diametrically opposed electromagnets 4 and 5, and a second pair of diametrically opposed magnets 6 and 7 aligned at right angles to magnets 4 and 5. These magnets constitute the pole pieces of the motor.

A rotor 11 is mounted on a shaft 12 and it is provided with six arms 14 extending radially from the shaft and spaced at 60° intervals thereabout. The rotor is mounted with the arms 14 disposed in the plane of the stator pole pieces and extending substantially to their faces. The ends of the arms are specially formed, in a manner to be described, so as to rotate only in a clockwise fashion. Rotor shaft 12 has its rear end rotatably mounted in a bearing formed in the housing (Fig. 2) and the other end is rigidly attached to a shaft 16 carrying a pinion 17. An indicator disc, or drum, 18 is geared to the motor shaft through a gear train consisting of pinion 17, gear 19, pinion 20, and gear 21, Fig. 1. Gear 21 is keyed on a stub shaft 22 which extends through drum 18 and is locked thereto by a nut 23 so that the drum will rotate with it. Pinion 20 is mounted on a shaft 24, and both shafts 22 and 24 are rotatably mounted in a disc 26 which functions as a bearing for these shafts.

From the above, it is apparent that the drum 18 will be rotated by the rotor 11. The rotor's rotation is, in turn, produced by energy impulses feeding through a trigger circuit 31, Fig. 3, to successively energize and de-energize the pairs of pole pieces of the motor. The switching effect of the trigger circuit is achieved through the use of thyratron tubes 32 and 33, such as R. C. A. 2050 or 2051. Tube 32 is electrically connected to the pair of magnets 4 and 5, and tube 33 is connected in the same manner to the pair 6 and 7. A battery 36 supplies the power for the circuit and the motor, or, if desired, an A. C. power supply with conventional rectifier and filter arrangement may be substituted.

When it is desired to make a count of the energy impulses in any electric circuit, terminals 37 and 38 of the trigger circuit are connected to the output of the circuit to be tested. When the first impulse is received from that circuit, tube 32 is rendered conductive and the current flows to energize pole pieces 4 and 5 and the rotor arms disposed at 150°–330° (Fig. 1) are magnetically attracted to the faces of these pole pieces. The next impulse, regardless of wave shape, renders tube 32 non-conductive and tube 33 conductive so that pole pieces 4 and 5 are de-energized and release their hold on the rotor arms, while pieces 6 and 7 are energized and magnetically attract to their faces the rotor arms then disposed at 60°–240° (Fig. 1). Each successive impulse energizes and de-energizes the pairs of pole pieces in the manner just described to rotatably index the rotor, as well as drum 18. The periphery of drum 18 is calibrated so that each impulse will advance it one mark. An index finger 39 is mounted as shown and indicates the total impulses.

The switching action of the trigger circuit is due to the fact that the tubes are so connected together that the firing of one establishes a negative grid bias in the other which prevents the other from firing. With such a condition pertaining a subsequent positive input pulse slightly larger in amplitude than the established bias will then fire the second tube and extinguish the tube formerly conducting. Also, only one tube will fire initially, when the battery or anode supply voltage is first applied, this being due to minute variations in the tubes such as element spacing, gas pressure, heater temperature, activity, etc. It also should be noted that the particular circuit shown includes means such as a common cathode resistor for automatically adjusting hold-off bias and evening out variations in battery supply voltage, as well as a pair of condensers which cause a gradual dissipation of coil energy and produce smoother rotor rotation. These elements will be readily understood by those acquainted with these circuits. However, since it also will be evident to such persons that re-arrangements of this particular circuit can produce the same effect, it should be understood that the invention is not limited to this particular circuit.

It is preferable for some purposes to provide means for automatically shutting off the power supply of the motor after a predetermined number of counts. This can be done in various ways as by mounting cam members at appropriate points on the face of drum 18 to operate switches in the power circuit, or in other ways that will appear to those skilled in the art.

It is important to this invention that rotor arms 14 be formed in such a way that they rotate in one direction only. Accordingly, each arm is provided with a shoulder portion 41 that progressively decreases in cross sectional area in the direction of the rotation, most suitably to a relatively sharp nose as shown. In this way the magnetic reluctance of the rotor decreases in the desired direction of rotation and increases in the other direction. The result is that, as seen from Fig. 1, when two aligned arms are aligned with a pair of magnets, the next adjacent pair of aligned arms in the direction of rotation lie with their noses closely adjacent to the pair of magnets which will be energized next. Thus, when thyratron tube 32 fires, the rotor is caused to move in a clockwise direction, there being little tendency for it to rotate counter-clockwise. It is noted that the magnets not only pull the arms to them, but also lock these arms magnetically in position after each impulse. This locking action is normally sufficient to prevent mechanical chattering or vibration. However, for high speed action, a ratchet or no-back mechanism (not shown) may be added to help mechanical damping.

Other forms of rotors are possible provided they are so shaped as to have increased reluctance in one direction of rotation and decreased reluctance in the other. Such an alternate form is shown in Fig. 4 and has the shoulders 59 which are decreasingly tapered in a counter-clockwise direction to produce rotation in that direction. This rotor completes one 360° revolution with every 20 input pulses while that shown in Fig. 1 makes a complete revolution with 12 input pulses. Another form of rotor (not shown) which could be used, would have successive lengths of its periphery crimped in a saw-tooth fashion so as to provide the rotor with decreased magnetic reluctance in the desired direction of rotation.

Although this invention has been described with reference to geometrically opposed pairs of pole pieces, it should not be limited thereto. As will be readily apparent to those skilled in this art an odd number of pole pieces can be operatively connected to the source of energy so that one of the pole pieces during two successive energy impulses becomes first electrically opposed

to one of its adjacent pole pieces and next electrically opposed to the other adjacent one so as to rotatably index the rotor in the manner previously described. Subsequent impulses then cause other pole pieces to form electrically opposed pairs with their adjacent poles to carry on the revolution of the rotor.

The various uses to which this invention can be put will be apparent to those in the electronic art. It is particularly useful for random counting or counting the impulses in high frequency currents, and by reason of the fact that it provides a high ratio of conversion of electrical energy into mechanical torque, the motors can be made not only to operate power switches but also as powerful as need be for the purposes to which these impulse actuated devices are put. Further, the circuit shown is sensitive to directions or polarity of the input pulses so that, if an alternating current voltage is applied to the input, the counter will indicate one count for each cycle. By known methods, it is possible to make the switch sensitive to impulses of either positive or negative at will.

According to the provisions of the patent statutes, I have explained the principle and mode of operation of my invention and have illustrated and described what I now consider to represent its best embodiment. However, I desire to have it understood that, within the scope of the appended claims, the invention may be practiced otherwise than as specifically illustrated and described.

I claim:

1. Apparatus for counting pulses of electrical energy of varying wave shapes and durations comprising opposed pairs of pole pieces disposed in the same plane, a rotor mounted within the plane of said pole pieces and having successive lengths of its periphery shaped to provide decreasing magnetic reluctance in the desired direction of rotation, counting means operatively connected to said rotor, a source of electrical power for energizing said pole pieces, a circuit operatively connecting said pole pieces with said source and adapted to successively energize and deenergize the pairs of opposed poles, said circuit including an electronic switch electrically connected to the source of said electrical pulses, said switch including at least a pair of thyratron tubes operatively connected together to alternately transfer in response to said impulses said power to successively energize and deenergize the pairs of pole pieces.

2. Apparatus for counting pulses of electrical energy of varying wave shapes and durations comprising opposed pairs of pole pieces disposed in the same plane, a rotor mounted within the plane of said pole pieces, said rotor having an even number of uniformly spaced arms each provided at its end with a shoulder projecting laterally in the desired direction of rotor rotation and progressively decreasing in cross sectional area in that direction, counting means operatively connected to said rotor, a source of electrical power for energizing said pole pieces, a circuit operatively connecting said pole pieces with said source and adapted to successively energize and deenergize the pairs of opposed poles, said circuit including an electronic switch electrically connected to the source of said electrical pulses, said switch including at least a pair of thyratron tubes operatively connected together to alternately transfer in response to said impulses said power to successively energize and deenergize the pairs of pole pieces.

3. Apparatus for counting pulses of electrical energy of varying wave shapes and durations comprising two pairs of opposed pole pieces disposed at right angles in the same plane, a rotor mounted within the plane of said pole pieces, said rotor having an even number of uniformly spaced arms each provided at its end with a shoulder projecting laterally in the desired direction of rotor rotation and progressively decreasing in cross sectional area in that direction, counting means operatively connected to said rotor, a source of electrical power for energizing said pole pieces, a circuit operatively connecting said pole pieces with said source and adapted to successively energize and deenergize the pairs of opposed poles, said circuit including an electronic switch electrically connected to the source of said electrical pulses, said switch including at least a pair of thyratron tubes operatively connected together to alternately transfer in response to said impulses said power to successively energize and deenergize the pairs of pole pieces.

EDWIN R. MILLEN.

REFERENCES CITED

The following references are of record in the file of this patent:

UNITED STATES PATENTS

Number	Name	Date
362,322	Sheehy	May 3, 1887
491,970	Meston	Feb. 14, 1893
1,258,497	Straub	Mar. 5, 1918
1,371,096	Howe and Warner	Mar. 8, 1921
1,638,973	Walker	Aug. 16, 1927
1,933,086	Battegay	Oct. 31, 1933
2,156,969	Bryce	May 2, 1939
2,249,029	Mullerheim	July 15, 1941
2,428,882	Kolff	Oct. 14, 1947

FOREIGN PATENTS

Number	Country	Date
401,987	Great Britain	Nov. 23, 1933
522,557	Great Britain	June 20, 1940