W. J. NEIDIG.

TYPE WRITING MACHINE.

APPLICATION FILED DEC. 5, 1912.

Patented Oct. 6, 1914.

2 SHEETS—SHEET 1.

1,113,163.

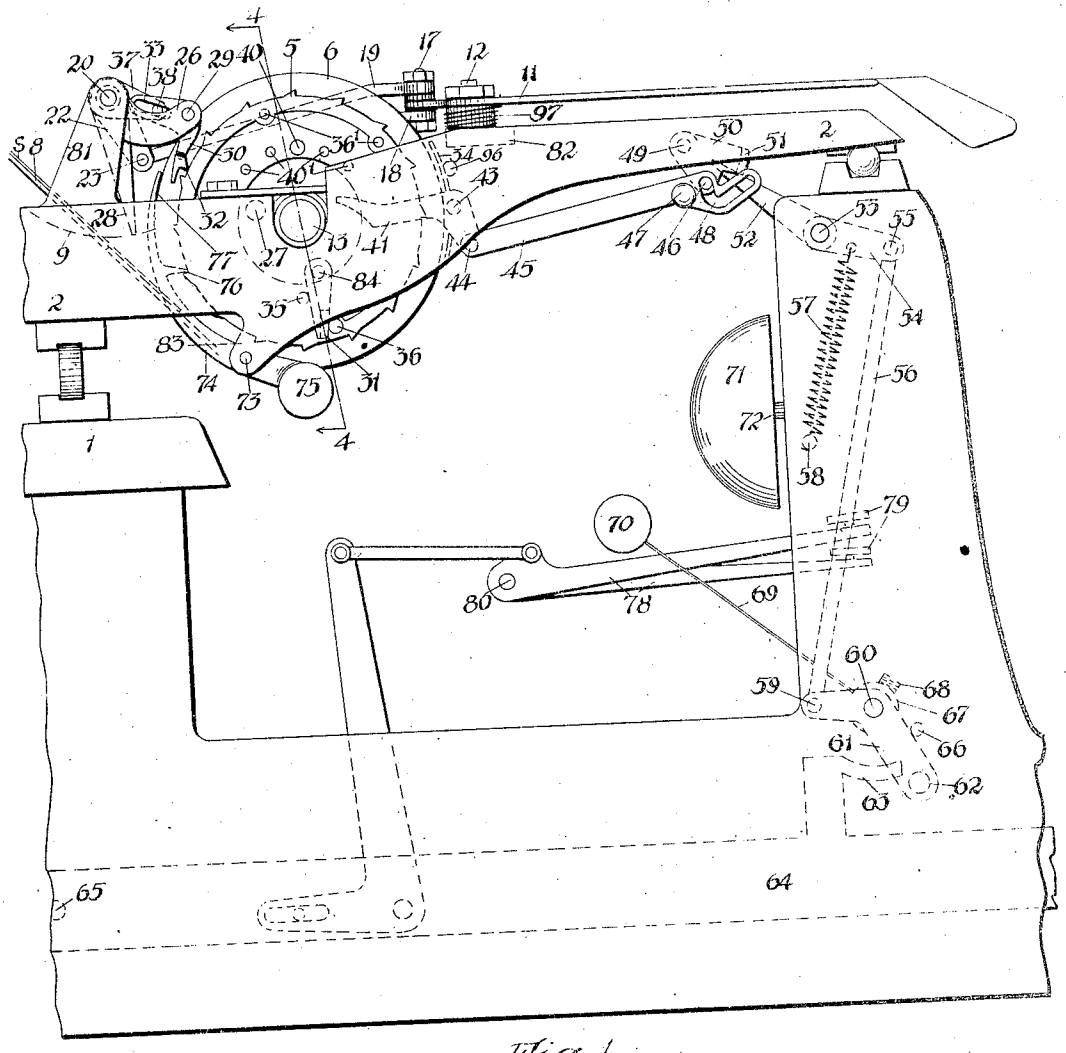

Fig 1.

Witnesses:
Oscar F. Hill
Elsie A. Bartzsch

Inventor:
William J. Neidig
by Chas. F. Randall
Attorney

W. J. NEIDIG.

TYPE WRITING MACHINE.

APPLICATION FILED DEC. 5, 1912.

Patented Oct. 6, 1914.

1,113,163.

2 SHEETS—SHEET 2.

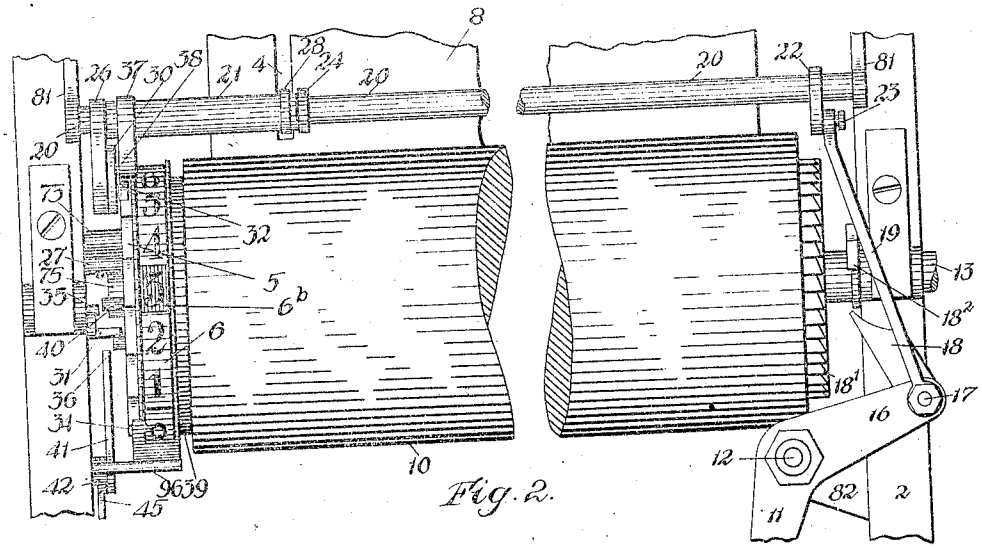

Fig. 2.

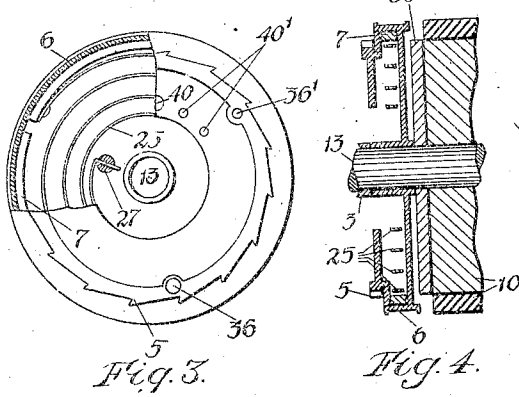

Fig. 3.

Fig. 4.

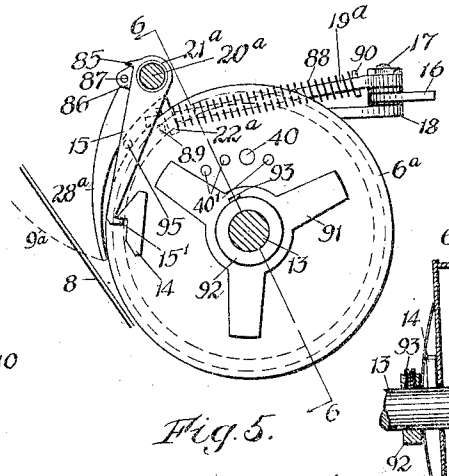

Fig. 5.

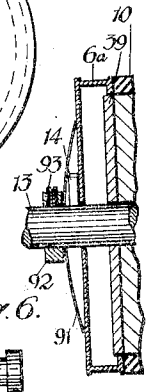

Fig. 6.

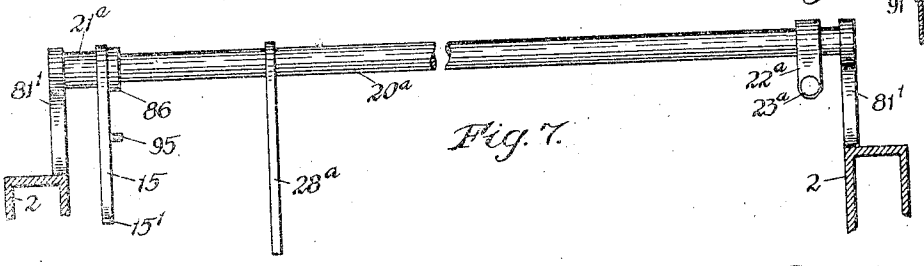

Fig. 7.

Witnesses:
Oscar F. Hill
C. A. Bartzsch

Inventor:
William J. Neidig
By Chas. F. Randall
Attorney.

UNITED STATES PATENT OFFICE.

WILLIAM J. NEIDIG, OF MADISON, WISCONSIN, ASSIGNOR TO NEIDIG TYPEWRITER CO., OF CHICAGO, ILLINOIS, A CORPORATION OF ILLINOIS.

TYPE-WRITING MACHINE.

1,113,163. Specification of Letters Patent. Patented Oct. 6, 1914.

Application filed December 5, 1912. Serial No. 735,107.

To all whom it may concern:

Be it known that I, WILLIAM J. NEIDIG, a citizen of the United States, residing at Madison, in the county of Dane, State of Wisconsin, have invented a certain new and useful Improvement in Type-Writing Machines, of which the following is a specification, reference being had therein to the accompanying drawings.

Certain principles and features of my invention as described herein are included within the generic invention which is described and claimed in Letters Patent No. 1,053,919, granted Feb. 18, 1913, upon my co-pending application filed April 20, 1908, Serial No. 428,212.

One of the objects of my general invention is to supply the operator of a typewriting machine with progressive indication of the distance from the current printing point to the bottom end of the sheet, or to another point on the sheet, and this without preliminary care on his part, automatically.

Additional objects are to supply the operator with further indicating means, comprising improved means whereby such types as may be desired of visual, audible and machine-lock signaling devices may be employed to indicate the arrival of the sheet into predetermined printing positions.

Features of the present branch or division of the invention include a novel form of intermittently-actuated paper-feeler which entirely retracts from the usual path of the entering sheet with each movement of the space-lever, thereby facilitating the entering of the sheet into the machine and the backward actuation thereof from any sheet-position; a novel form of sheet-controlled space-lever-actuated drive for the central operative member, whereby the indices used may be increased in size, if desired, and affording other advantages; and various novel constructions and combinations of elements adapted to render the invention more useful in practice, as will be hereinafter explained.

In the drawings,—Figure 1 is a view in end elevation of portions of a typewriting machine showing an embodiment of my invention applied thereto. Fig. 2 is a plan view of portions of the same. Fig. 3 is a view partly in section of a detail of Figs. 1 and 2. Fig. 4 is a cross-section of certain parts on the line 4—4, Fig. 1. Fig. 5 is an end elevation partly in section of a modification. Fig. 6 is a cross-section of portions of the same on the line 6—6. Fig. 7 is a front view of certain parts shown in Fig. 5, but with the addition of the ends of the carriage-frame in section and the upstanding supporting structure thereon.

The stationary main frame of a typewriting machine is indicated at 1, and at 2 the end frames of the usual transversely movable carriage, in which is journaled a platen arbor 13 having fixedly attached thereon a platen-roll 10 for advancing the sheet, the platen being rotated by usual line-spacing mechanism comprising in this case a space-lever 11 journaled on pin 12 carried by bracket 82 on said carriage-frame. The space-lever is here shown as having an arm 16 bearing a pin 17 on which is journaled a pawl 18 adapted to coöperate with a ratchet-wheel 18′ attached at the end of the platen, and is shown as returned into initial position by a coiled spring 97, one end of which is attached to bracket 82 and the other end of which engages with said space-lever. The usual paper-table for the support and guidance of the entering sheet is indicated at 8, and the usual type-bars at 78, connected in usual manner with the key-lever 64. Other typewriting parts not necessary to be shown may be as in practice. As thus described the parts are old in the art; they are or may be of any approved type.

Referring more particularly to the embodiment of the invention represented in Figs. 1 to 4, I employ an operative member and operating means therefor preferably constructed as follows: The operative member, in this case having the form of a revoluble drum 6 (Fig. 4), is journaled upon platen arbor 13 adjacent to platen head 39. Attached upon the face wall of said drum is a series of ratchet-teeth 5. The face wall of said drum 6 is supplied with one or more threaded holes 36′, into any one of which a projection 36 is adapted to be screwed, said projection being thereby angularly adjustable upon said operative member or drum. The face wall of said drum is also supplied with the threaded holes 40′, into any one of which projection 40 may be screwed, said projection being thereby also angularly adjustable upon the drum. Said face wall of

the drum has a central opening into which projects a split post 27, carried on frame 2. Attached to said post is one end of a helical spring 25, the other end being attached to a resilient friction band or split-ring 7 that expands radially into frictional engagement with drum 6. The purpose of the friction-ring is to provide for slipping so as to prevent the over-winding of the spring. Journaled on carriage-frame 2 at 84 is a hinged stop 31 having a turned-in portion that projects into the path of projection 36 on the drum, a position-stop 35 on carriage-frame 2 serving to limit the movement of said hinged stop in a backward direction. Spring 25 tends to rotate drum 6 in a backward direction so as to bring projection 36 against hinged stop 31 and said stop against position-stop 35, as shown in Fig. 1. Stop 31 is hinged in order to permit projection 36 to be actuated past the stop in continued forward actuation of drum 6, said stop separating from position-stop 35 in such case. A down-standing portion 83 of carriage-frame 2 bears a laterally-projecting pin 73 on which is journaled a detent 74 weighted at 75 to cause tooth 76 thereon to tend to press toward ratchet-teeth 5, and having an upwardly-extending curved portion 77, the purpose of which will be explained later. Drum 6 is an index-carrier, and is supplied with indices. A visual signaling means is also called into operation through said drum, a colored signaling segment 6^b as of paper being attached thereon in any desired angular position as by means of paste. A shield-pointer 34 is attached upon laterally-extending pin 96 on carriage-frame 2 in suitable position to coöperate with said indices and signaling segment on said drum. Operative member or drum 6 in this embodiment is given working actuation that is simultaneous or coördinate with that of the sheet-advancing platen by one of the parts of the typewriter mechanism, preferably the space-lever, under the control of a paper-feeler pressed intermittently against the sheet by one of the parts of the typewriter mechanism, preferably the space-lever also, the space-lever in this case being the agent employed in advancing the platen and having in addition to its platen-advancing function the double function aforesaid. Said actuating and controlling means are described thus: The ends of carriage-frame 2 are constructed with upstanding portions 81 in which are journaled the ends of the laterally-extending rock-shaft 20. Fixedly attached upon said shaft is an arm 22, said arm being connected through pin 23 thereon, connecting-rod 19, and pin 17 on arm 16, with space-lever 11, pin 23 aforesaid being sufficiently loose in its bearing in rod 19 to permit the play of parts. Fixedly attached upon said rock-shaft 20 near the other end is an arm 26 having thereon an inwardly-extending pin 29 upon which is journaled an elbow-lever 30, one arm of which has a slot 33. The other arm of said elbow-lever is turned-in so as to extend inwardly over ratchet-teeth 5. The turned-in portion is shaped as a pawl 32, to coöperate with said teeth, and has a position between said teeth and the curved portion 77 of detent 74 so that when moved away from said teeth it will engage with said curved portion 77 and move said detent away from teeth 5 also. Loosely journaled upon rock-shaft 20 between fixedly-attached arm 26 and a fixedly-attached collar 24 is a sleeve 21, bearing near one end a fixedly-attached arm 37 and near the other a fixedly-attached paper-feeler 28. Arm 37 carries an outwardly-extending pin 38 that projects into slot 33 in elbow-lever 30 before named. Paper-feeler 28 is adapted to enter slot 4 in paper-table 8. Pawl 32 tends to be held against ratchet-teeth 5 by its own weight and that of arm 37 and paper-feeler 28.

This portion of the mechanism operates as follows: The paper-sheet s (Fig. 1) is entered into the machine along paper-table 8 and advanced into printing position. Upon the completion of the first line of writing, the sheet is advanced by the platen under the actuation of space-lever 11, all in usual manner. The operation of the space-lever rocks shaft 20 through pin 17, rod 19, pin 23 and arm 22, thereby rocking arm 26 downwardly, and through pin 29, pawl 32 on elbow-lever 30, and ratchet-teeth 5, giving actuation to operative member or drum 6. The same action is communicated from elbow-lever 30 to sleeve 21 through arm 37, pin 38 thereon, and slot 33, thereby actuating paper-feeler 28 toward the paper-path. As the sheet lies over slot 4 in the paper-table, the paper-feeler is unable to enter the slot but is detained by the sheet. Sleeve 21 and arm 37 are thereby prevented from complete rocking movement. Further movement of arm 26 downwardly under the actuation of the space-lever results in the lifting of pawl 32 away from ratchet-teeth 5, one arm of elbow-lever 30 being acted upon by the now stationary pin 38. Still further movement of said arm 26 causes pawl 32 to lift detent 74 away from said ratchet-teeth likewise, through engagement with the curved portion 77 thereof. Thereupon drum 6, neither driven by pawl 32, nor detained against the tension of spring 25 by detent-tooth 76, is rotated backwardly by said spring until projection 36 meets stop 31 and said stop holds said drum from further backward rotation. This position of the drum may be designated its constant or predetermined starting position, and into this position the drum must always return during the presence of the

paper-sheet in the path of the paper-feeler, for such will be the action of the parts for each stroke of the space-lever during the control of the paper-feeler by the sheet. Eventually however the paper-sheet will be advanced until the bottom end thereof passes from over slot 4. The next succeeding stroke of the space-lever will result in the rotative actuation of drum 6 by pawl 32 and the detention thereof by detent tooth 76 in advanced position, since paper-feeler 28 is now free to enter slot 4, and pawl 32 and tooth 76 are not actuated thereby out of engagement with ratchet-teeth 5. Such advance will bring an index upon drum 6 from behind shield-pointer 34 into indicating position. The next stroke of the space-lever will bring a second index into indicating position; and so on to the end of the sheet. The indices may be as desired: I prefer to use a series of downward-counting numerals indicating the number of line-space actuations between the printing point and the bottom end of the sheet or a point on the sheet a given distance therefrom. By using a pawl-and-ratchet actuation for drum 6, said drum can be rotated if desired at a greater speed and through a greater angle than the platen so as to render a larger indicating surface available for each index in the series. If downward-counting numerals are used, as in the drawings, it may sometimes be found desirable to change the angular position of pin 36 on drum 6, since the number of feed-movements between the printing point and the end of the sheet will vary according to the extent of the advance of the sheet by each feed movement. That is to say, if the sheet is advanced a single line for the feed-movement, the first index brought into indicating position by the working movement of drum 6 will be a higher numeral than if the feed is by double-line advances or by triple-line advances. The seats 36′ therefore are provided so as to adjust the constant starting position of drum 6 according to the extent of the feed movement. If the feed is by single lines, index 18 may be the one first brought into indicating position, indicating that eighteen feed movements will elapse before the end of the sheet is reached; if by double-line advances, index 9 may be the first to be brought into indicating position, indicating that nine feed movements will elapse before the end of the sheet is reached; and if by triple-line advances, the index 6, indicating that six feed movements will elapse. The indices, whatever they may be, can however be used if desired with all feeds without adjusting pin 36 angularly on drum 6. Color-segment 6^b is used independently of the indices or in connection therewith; at the predetermined sheet-position it is brought into view by drum 6 from behind shield-pointer 34, thereby giving the operator a visual signal at any desired distance from the end of the sheet.

Additional indicating means are provided for as follows: Carriage-frame 2 bears an inwardly projecting pin 43, upon which is journaled elbow-lever 41. One end of said elbow-lever projects into the path of projection 40 on drum 6. Said lever bears a pin 44, on which is journaled link 45 supplied with a handle 47 and an elbow trip-slot 48. Pin 49 on carriage-frame 2 has journaled thereon an arm 50, and it will be understood that a similar pin at the other end of the carriage-frame has journaled thereon a similar arm, the two arms being connected by the laterally extending bail rim 51 so as to form a rocking bail-piece. Pin 46 on arm 50 projects into trip-slot 48 before named. A rock-shaft 53 is journaled at either end in main frame 1. On said rock-shaft about midway of its length is a fixedly-attached arm 52 adapted to engage with bail-piece 51 universally, in every lateral position of the carriage. Near the end of said rock-shaft is a fixedly-attached arm 54. A rock-shaft 60 is also journaled at either end in said main frame, fixedly attached to which at either end is an arm 61. Said arms 61 are connected by a transversely-extending locking bail-rod 62 in such manner that when shaft 60 is rocked, rod 62 is caused to take a position under the lock-projections 63 on the key-levers 64 so that said key-levers can no longer be depressed about their axis 65 and the printing types 79 on the type-bars 78 can no longer be used in printing. One arm 61 is connected through pin 59 thereon and rod 56 with pin 55 on arm 54. A spring 57 attached at one end to inwardly-projecting pin 58 on frame 1 and at the other to arm 54 tends to hold the said arm 61 against position-stop 66 on frame 1 and bail-rod 62 clear of lugs 63. A bell 71 is supported by the central pin 72 in the path of bell-hammer 70. Said hammer is carried on a light spring-rod 69 that radiates from hub 67 adjustably attached upon shaft 60 by means of set-screws 68.

This portion of the mechanism operates as follows: Pin 40 on drum 6 at the predetermined time is brought into engagement with lever 41 in its path by the working movement of said drum, rocking said lever, and through pin 44, rod 45, and pin 46 rocking bail 51 against arm 52. Shaft 53 is thereby rocked, and through arm 54, pin 55, rod 56, pin 59 and arm 61, bail-rod 62 is moved under lock-projections 63, thereby rendering the printing mechanism of the typewriter inoperative for use. Through the said arm 61 the same action rocks shaft 60, hub 67 thereon, and spring-rod 69, causing bell-hammer 70 to strike bell 71 and give an audible signal. The operator thereby is

warned that he has written his last line, and without wasting time in trying the key-levers to see if they are locked is enabled to remove his sheet. If he desires to do further printing upon his sheet he can do so by raising the slotted end of rod 45 through the handle 47 until pin 46 passes into the elbow portion of slot 48, thereby unlocking the bail 51, whereupon spring 57 restores the parts into position to unlock the printing mechanism. In case said action carries pin 40 entirely past lever 41, said pin is enabled to pass said lever when drum 6 is rotated backwardly into starting position, bail 51 separating from arm 52 and permitting backward movement of the lever. The normal position of the lever parts is as shown in Fig. 1, the superior weight of bail 51 tending to maintain lever 41 in the path of projection 40.

In Figs. 5, 6 and 7 is represented another type of means for giving an operative member a constant starting position and for actuating it to move coördinately with the sheet, the operative member here being actuated from the platen instead of directly by the space-lever, and being detainable in starting position. Carriage-frame 2 at either end bears an upstanding portion 81′ (Fig. 7), in which is journaled rock-shaft 20^a. Fixedly attached upon said rock-shaft is an arm 22^a, supplied with an opening or slide-way 23^a. Rod 19^a, journaled at one end on pin 17 on arm 16 of space-lever 11, is movable lengthwise through said slide-way, cross-pin 89 limiting its movement in one direction therethrough. A coiled compression-spring on said rod bears at one end against a cross-pin 90 and at the other against said arm 22^a. Also fixedly attached upon rock-shaft 20^a is arm 86 supplied with a laterally-extending pin 87, and paper-feeler 28^a having a path indicated at 9^a into a slot in paper-table 8. The said rock-shaft bears the loosely-journaled sleeve 21^a having fixedly attached thereon a stop 15, said stop being supplied with a catch portion 15′ and a lug 85, the latter adapted to be engaged by the before-named pin 87. The operative member in this case is the drum 6^a, shown for convenience as actuated frictionally from the platen, the drum being pressed into frictional engagement with the end of platen 10 by a dished spring 91. A collar 92 attached on platen arbor 13 by set-screw 93 presses centrally against said spring and supplies convenient pressure-means therefor. Said drum bears a detent element 14, to coöperate with the catch portion of stop 15. Said detent is constructed to lift stop 15 idly aside when backed up against part 15′ thereof. Stop 15 tends to be maintained in the path of detent 14 by its own weight, its movement into said path being limited by a laterally-projecting position-stop 95 which engages upon the adjacent periphery of drum 6^a. The face-wall of drum 6^a is supplied as before with threaded seats 40′, into one of which projection 40 is screwed.

The paper-sheet is entered into the machine as usual, paper-feeler 28 being held in retracted position against the platen by the retracted space-lever, and stop 15 lying in the path of projection 14. When the platen is advanced by the space-lever, paper-feeler 28^a is actuated toward the sheet through pin 17, rod 19^a, spring 88, arm 22^a, and shaft 20^a. As the slot in the paper-table is closed by the sheet, the paper-feeler is detained, spring 88 compressing between cross-pin 90 and arm 22^a under the continuing action of the space-lever, and rod 19^a sliding through opening 23^a. Eventually by the progressive rotation of the platen projection 14 is brought against stop 15, whereby operative member 6^a is detained in its constant starting position. Eventually also the end of the sheet passes from over the slot in the paper-table. The paper-feeler under the actuation of the space-lever now enters said slot, shaft 20^a being rotated until arm 86 bears pin 87 against lug 85 on stop 15 and moves said stop out of the path of projection 14. Thereupon member 6^a, no longer detained by said stop, takes up movement with the platen, and it moves therewith during the remaining progress of the sheet. Said member or drum is supplied with indices as desired, preferably a series of downward counting numerals, to indicate the position of the bottom end of the sheet, or another point on the sheet, relatively to the printing point. The shield-pointer 34, color segment 6^b, bell striking means, and means for rendering a part or parts of the machine inoperative for use, will be as described in connection with the earlier figures.

The devices shown in the drawings and described herein are part of a series of closely related inventions or improvements which are presented in a number of co-pending applications for Letters Patent filed by me. The said devices have a number of general objects in common with those forming the subject-matter of different applications in the said series, and to a certain extent embody and utilize various principles and features which are common to devices shown and described in one or another of the said applications. Some of the said common principles and features are claimed broadly in Letters Patent No. 1,053,919, granted upon my application filed April 20, 1908, aforesaid, and in Letters Patent dated February 18, 1913, No. 1,053,920, granted upon my application filed March 30, 1912, Serial No. 687,463; No. 1,053,922, granted upon my application filed December 15, 1909, Serial No. 533,309; No. 1,053,923, granted upon my

application filed December 13, 1909, Serial No. 532,928; No. 1,053,925, granted upon my application filed April 25, 1910, Serial No. 557,330; No. 1,053,926, granted upon my application filed April 4, 1912, Serial No. 688,358; No. 1,053,928, granted upon my application filed April 3, 1912, Serial No. 689,560; No. 1,053,930, granted upon my application filed May 20, 1912, Serial No. 698,440, and in my application filed December 17, 1909, Serial No. 553,725. The branch of the general invention that is covered hereby is set forth in the following claims, in which as in the foregoing specification the term "space-lever" is used uniformly with the significance usually attached in the art to the term "line-space-lever".

I claim as new and desire to secure by Letters Patent—

1. In a typewriting machine, in combination, sheet-advancing means, a paper-backing having a slot therein, an oscillating paper-feeler having a path into said slot and intermittently retracted from sheet-controlled position away from said paper-backing to facilitate backing the bottom edge of the sheet over said slot, and an index-carrier operated to move with the sheet under the control of said paper-feeler.

2. In a typewriting machine, in combination, a platen, an operative member, indicating means called into operation through said member, means for giving said member a predetermined starting position, means for giving said member movement correlated with that of the platen from such position, and sheet-controlled means for controlling the said movement, including a paper-feeler having an intermittent actuation tending to press the working portion thereof into the paper-path.

3. In a typewriting machine, in combination, a platen, an oscillating paper-feeler controlled by the sheet during advancing movement thereof and retracted from sheet-controlled position during the time the sheet is at rest, a series of indices, and paper-feeler-controlled actuating means adapted to bring constant indices into indicating prominence coördinately with the arrival of the sheet into constant sheet positions.

4. In combination, typewriter mechanism including a platen, an oscillating paper-feeler controlled by the sheet during advancing movement thereof and retracted from sheet-controlled position during the time the sheet is at rest, and means under the control of said paper-feeler for rendering a part or parts of the typewriter mechanism inoperative for use.

5. In combination, typewriter mechanism including a platen, an operative member actuated to move simultaneously with the platen, indicating means called into operation through said member, means for giving said member a constant starting position, and a reciprocating paper-feeler pressed against the work-sheet by a part of said typewriter mechanism and connected to control the actuation of said operative member.

6. In combination, typewriter mechanism including a platen, an operative member, indicating means called into operation through said member, means for giving said member a constant starting position, means for giving said member movement simultaneous with that of the platen from such position, and sheet-controlled means for controlling the said movement, including a reciprocating paper-feeler having an action into the paper-path and retracted from the paper-path by a part of said typewriter mechanism.

7. In a typewriting machine, in combination, a space-lever, a platen, a paper-feeler, an operative member actuated by said space-lever under the control of said paper-feeler, indicating means called into operation through said member, and means for giving said member a predetermined starting position.

8. In a typewriting machine, in combination, a platen, an index-carrier and indices, means for giving said carrier a predetermined starting position, means for giving said carrier movement simultaneous with that of the platen from such position, and an oscillating paper-feeler having intermittent control by the sheet and connected to control the said movement.

9. In a typewriting machine, in combination, a space-lever, a platen, a paper-feeler, an operative member actuated by said space-lever under the control of said paper-feeler, indices called into operation through said member, and means for giving said member a constant starting position.

10. In a typewriting machine, in combination, a platen, an operative member, visual signaling means called into operation through said member, means for giving said member a predetermined starting position, means for giving said member movement simultaneous with that of the platen from such position, and an oscillating paper-feeler having intermittent control by the sheet and connected to control the said movement.

11. In a typewriting machine, in combination, a space-lever, a platen, a paper-feeler, an operative member actuated by said space-lever under the control of said paper-feeler, visual signaling means called into operation through said member, and means for giving said member a constant starting position.

12. In a typewriting machine, in combination, a platen, an operative member, an audible signaling means called into operation through said member, means for giving said member a predetermined starting position,

means for giving said member simultaneous movement with the platen from such position, and an oscillating paper-feeler having intermittent control by the sheet and connected to control the said movement.

13. In a typewriting machine, in combination, a space-lever, a platen, a paper-feeler, an operative member actuated by said space-lever under the control of said paper-feeler, an audible signaling means called into operation through said member, and means for giving said member a predetermined starting position.

14. In combination, typewriter mechanism including a platen, an operative member, means called into operation through said member for rendering a part or parts of the typewriter mechanism inoperative for use, means for giving said operative member a predetermined constant starting position, means for giving said member movement simultaneous with that of the platen from such position, and an oscillating paper-feeler having intermittent control by the sheet and connected to control the said movement.

15. In combination, typewriter mechanism including a space-lever and a platen, a paper-feeler, an operative member actuated by said space-lever under the control of said paper-feeler, means called into operation through said member for rendering a part or parts of the typewriter mechanism inoperative for use, and means for giving said member a predetermined starting position.

16. In a typewriting machine, in combination, a space-lever, a platen, an operative member, indicating means called into operation through said member, means for giving said member a predetermined starting position, means for giving said member movement simultaneous with that of the platen from said starting position, and a paper-feeler actuated toward the paper-path by said space-lever and connected to control the said movement.

17. In a typewriting machine, in combination, a space-lever, a platen, a paper-feeler retracted from the paper-path by said space-lever, an operative member actuated to move simultaneously with the platen under the control of said paper-feeler, indicating means called into operation through said member, and means for giving said member a predetermined starting position.

18. In a typewriting machine, in combination, a space-lever, a platen, an operative member, indicating means called into operation through said member, means for giving said member a constant starting position, means for giving said member simultaneous movement with the platen from such position, and an oscillating paper-feeler given intermittent actuation toward and away from the paper-path by said space-lever and connected to control the said movement.

19. In a typewriting machine, in combination, a platen, an operative member having a projection thereon, a stop in the path of said projection, a spring for actuating said operative member and its projection against said stop, a space-lever, a paper feeler actuated thereby, means for giving said operative member movement coördinate with that of the platen under the control of said paper-feeler, and indicating means called into operation through the operative member during said movement.

20. In a typewriting machine, in combination, a platen, an operative member, indicating means called into operation through said member, means for giving said member a predetermined starting position, and means including a sheet-controlled pawl-and-ratchet device for giving said member movement with the platen from said starting position.

21. In a typewriting machine, in combination, a space-lever, a platen for advancing the sheet, an operative member, indicating means called into operation through said member, means for giving said member a predetermined starting position, a paper-feeler, and means including a pawl and a co-operating ratchet device, one thereof actuated from said space-lever and one thereof controlled by said paper-feeler, for giving said operative member working movement from said starting position.

22. In a typewriting machine, in combination, a space-lever, a platen, an operative member actuated by said space-lever, indicating means called into operation through said member, means including a spring for giving said member a constant starting position, and a sheet-controlled detent for detaining said member in advanced positions against the force of said spring.

23. In a typewriting machine, in combination, a platen for advancing the sheet, an operative member having a projection in connection therewith, indicating means called into operation through said member, a stop for stopping said member in predetermined starting position, means for actuating said member and its projection against said stop, and a space-lever connected to give said member working movement from the said starting position under the control of the sheet.

24. In a typewriting machine, in combination, a platen, an operative member having a projection in connection therewith, indicating means called into operation through said member, a stop in the path of said projection, a spring for actuating said member and its projection against said stop, a space-lever, and a pawl-and-ratchet device actu-

ated from said space-lever under the control of the sheet for giving said member working movement from the said starting position.

25. In combination, typewriter mechanism including a platen, an operative member, indicating means called into operation through said member, means including a spring for giving said member a predetermined starting position, and a pawl-and-ratchet device actuated from a part of said typewriter mechanism under the control of the sheet for giving said operative member working movement from the said starting position.

26. In combination, typewriter-mechanism parts including a platen, a reciprocating paper-feeler retracted from contact with the sheet by a typewriter-mechanism part, to facilitate operating the sheet, and an index-carrier operated by a typewriter-mechanism part under the control of said paper-feeler.

27. In combination, typewriter-mechanism parts including devices for feeding the sheet, a reciprocating paper-feeler retracted from contact with the sheet by a typewriter-mechanism part, an operative member actuated from a typewriter-mechanism part to move coördinately with the sheet, under the control of said paper-feeler, and indicating means called into operation through said member.

28. In combination, typewriter-mechanism parts including devices for advancing the sheet, an operative member actuated from said sheet-advancing devices, indicating means called into operation through said member, a paper-feeler, and means operated from a typewriter-mechanism part under the control of said paper-feeler for controlling the actuation of said operative member.

29. In a typewriting machine, in combination, devices for advancing the sheet, an index-carrier actuated from said devices, a paper-feeler, and means operated from said sheet-advancing devices under the control of said paper-feeler for controlling the actuation of said index-carrier.

In testimony whereof I affix my signature in presence of two witnesses.

WILLIAM J. NEIDIG.

Witnesses:

THEODORE HOEVELER,

JULIA HOEVELER.