Feb. 13, 1962 R. E. SAND 3,021,414

PLUG-IN SURFACE UNIT

Filed Dec. 31, 1959 2 Sheets-Sheet 1

Fig. 1

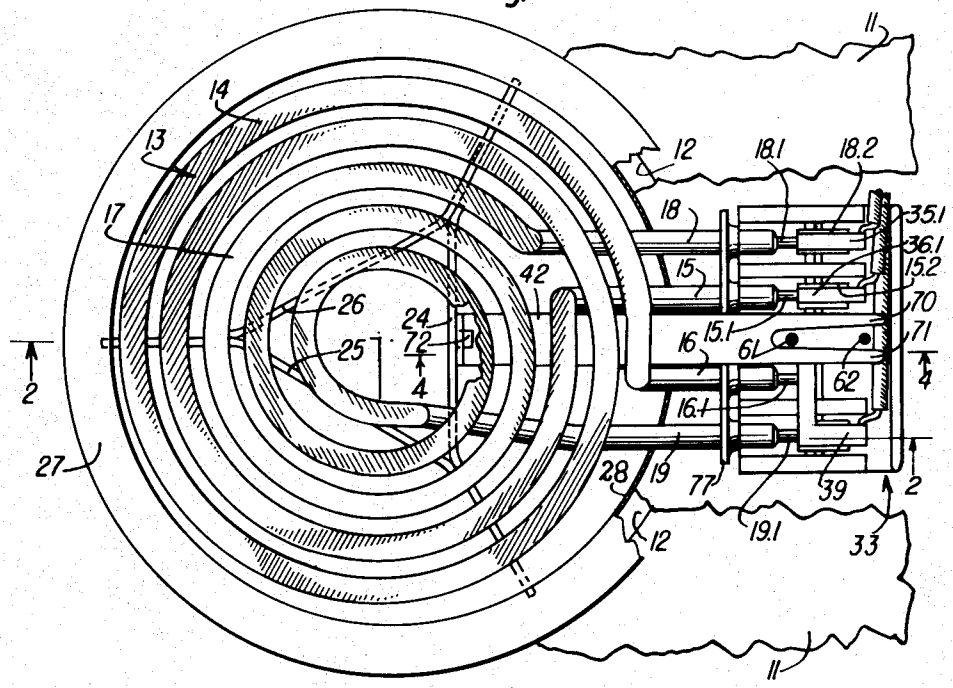

Fig. 2

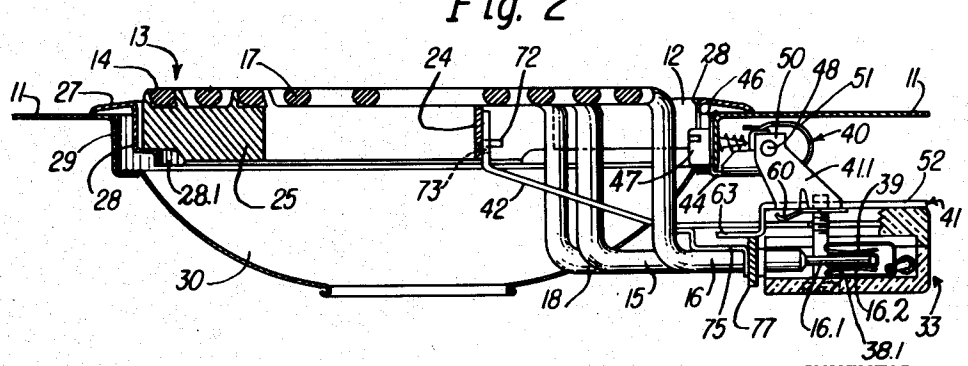

INVENTOR.
Robert E. Sand.
BY Andrew G. Hubbard
ATTY.

Feb. 13, 1962 R. E. SAND 3,021,414

PLUG-IN SURFACE UNIT

Filed Dec. 31, 1959 2 Sheets-Sheet 2

Fig. 4

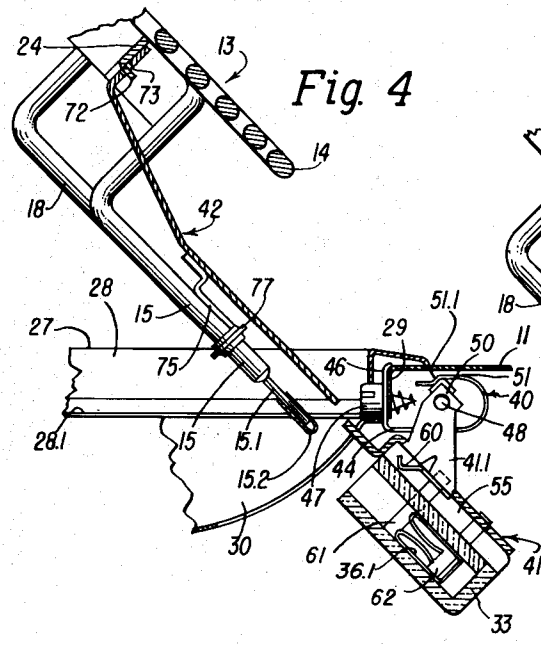

Fig. 3

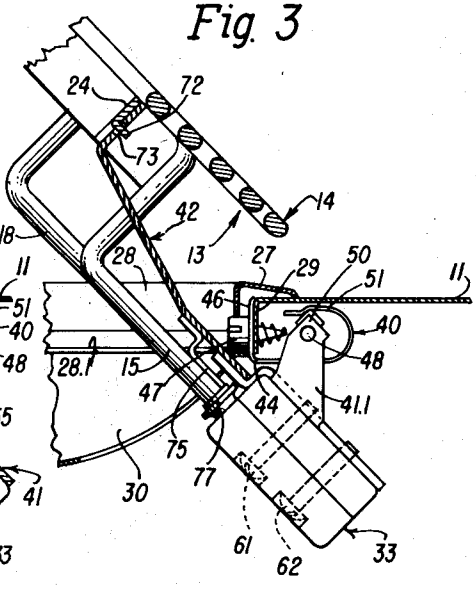

Fig. 5

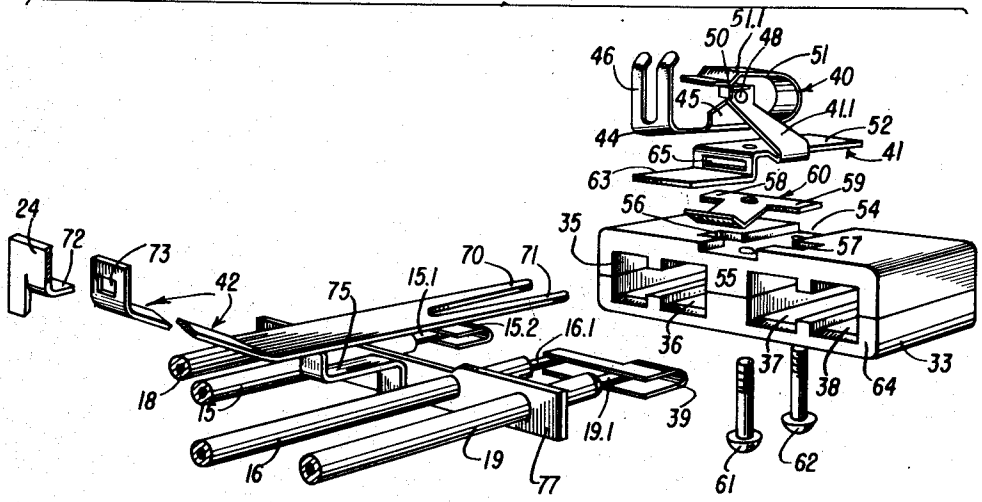

INVENTOR.
Robert E. Sand.
BY
Andrew B. Shepard
ATTY.

United States Patent Office 3,021,414
Patented Feb. 13, 1962

3,021,414

PLUG-IN SURFACE UNIT

Robert E. Sand, Itasca, Ill., assignor to General Electric Company, a corporation of New York

Filed Dec. 31, 1959, Ser. No. 863,271
6 Claims. (Cl. 219—37)

The present invention relates to surface cooking units for use in electric ranges and more particularly relates to mechanisms for mounting the individual units detachably to the cooking top.

It is an object of the present invention to provide a simple device for maintaining a plug-in heating unit in contact with the necessary electrical terminals and which allows the unit and the terminals to be tilted jointly to a stable raised position in which the unit may be readily detached from the terminals.

It is another object of the present invention to provide in a plug-in heating unit, a terminal assembly receptive to heating unit terminals which is hinged to rotate through an arc of predetermined length to a raised position in which the heating unit may be readily detached therefrom; the terminal assembly thereafter being held stationarily in the raised position receptive to the return of the heating unit. The hinge assembly further provides means for guiding and facilitating the removal and return of the heating unit.

It is a further object to provide a grounding path from the heating element sheath to the cooking top by way of the physical connection of the heating element to the terminal assembly and which path is not opened until after electrical connection from the heating element to the power source has been released.

The invention in its preferred form includes a heating unit with plug-in connectors and a structure for securing the heating unit to a cooking surface. The structure includes a terminal block which is pivotal between an operative position parallel to the cooking top and a position oblique to said cooking top. The terminal block in its upper surface contains a longitudinal indentation or channel which is covered by a lower horizontal section of a hinging member to jointly form a tunnel to receive a male bayonet arm extending from the heating unit. With the bayonet fully within the tunnel and the heating unit terminal conductors firmly nested within the terminal cavities of the terminal block, the heating unit is hinged jointly with the terminal block. Thus, the terminal block and heating unit are conjointly movable from the operative to the oblique position. The respective elements are held in the oblique position by the engagement of a cam surface on its pivotal hinge with a resilient holding member. With the terminal block held in this oblique position, the heating unit may be removed from the terminal block by movement of the heating unit up the oblique plane, formed by the then upwardly sloping tunnel. Further, the lower section of the hinging member serves as a guide to facilitate the return of the bayonet arm into the tunnel and thereby alleviate alignment problems in the return operation.

The invention as to its organization and principle of operation together with further objects and advantages thereof, will best be understood by reference to the following specification taken in connection with the accompanying drawings in which:

FIG. 1 is a fragmentary top plan view of an electric range and cooking unit with portions of the range cooking top broken away, the upper portion of the terminal block removed, and portions of the cooking unit in section;

FIG. 2 is a vertical section taken along the lines 2—2 of FIG. 1;

FIG. 3 is a vertical side elevation of the hinge element showing the unit in raised position.

FIG. 4 is also a vertical sectioned side elevation of the hinge element showing the unit in the raised position with the unit partially removed from the hinge and taken along the lines 4—4 of FIG. 1;

FIG. 5 is an exploded view of the hinge structure and terminal block components.

In the typical installation, the heating units are mounted in a conventional electric range having a cooking top **11** provided with a suitable number of circular openings **12**, each adapted to receive a cooking unit **13**. Usually there are three or four of such cooking units suitably arranged about the cooking top.

Each cooking unit generally comprises a first sheathed heating element **14** having respective terminal portions **15** and **16** and a second sheathed heating element **17** having the terminal portions **18** and **19**. Preferably, these elements will be constructed as described in the United States Patent to C. C. Abbott, No. 1,367,341 dated February 1, 1921, and in the J. C. Sharp Reissue Patent No. 22,177 of September 8, 1942. Each of these elements, as described in the cited patents, has a coiled resistance conductor housed in a metallic sheath and supported in uniformly spaced relationship to the sheath by a highly compacted mass of a suitable heat conducting and electrically insulating material such as powdered magnesium oxide. As is conventional, the heating elements are arranged to form flat spirals of several convolutions and are nested one within the other on a support structure. The support structure of the present invention includes a plurality of radially extending vertically arranged plates **24**, **25**, and **26** joined together to form a centrally positioned equilateral triangle as shown in FIG. 1. The upper edges of these plates lie in a common plane and support the heating elements as shown.

The structure is carried by a trim ring having a rim **27** resting on the cooking top **11** about the opening therein and a downwardly extending circular sidewall flange **28** which is spaced inwardly from the depending flange **29** defining the cooking top opening **12**. In the present embodiment there is no permanent connection between the trim ring and the support structure although the radial extensions of the structure normally rest on an inwardly directed flange **28.1** of the trim ring as will be explained more fully later. The trim ring thus establishes the plane of the upper edges of the support plates parallel to the plane of the cooking top **11**. A suitable drip and reflector pan **30** also may be removably supported below the heating unit as required.

The respective heating elements rest on the upper edges of the radial support plates, and each element is secured to only one of the plates at only one point. As shown in FIG. 2, an outer convolution of each of the heating elements is anchored to the support plate **25** by means of upwardly extending pairs of jaws which grip the sheath of the respective heating elements. Except for this single point of attachment of the heating elements to the support structure, the elements are free to move on the upper edges of the supporting structure as they expand and contract with temperature changes. The terminal portions of the heating elements extend downwardly from the support plates and rectilinearly beneath the cooking top **11** and have conductor terminals **15.1**, **16.1**, **18.1**, and **19.1** extending therefrom. These conductor terminals may have welded thereto contactors such as **15.2** and **18.2** shown in FIG. 1 of suitable contact material such as nickel silver.

In order to form a connection from these terminals to a conventional source of 230 volt, 3 conductor power, a terminal block **33** preferably of molded vitreous insulating material is mounted to the underside of the cooking top

11 adjacent the cooking top cutout 12. The terminal block has four terminal receiving sockets 35, 36, 37 and 38 in its lower half, each being adapted to receive the respective terminal ends and their affixed contactors. The sockets are separated by suitable internal walls which tend to electrically insulate each socket from the adjacent socket. Within each of the sockets is positioned contactor receiving members 35.1, 36.1, and 38.1. These contactor receiving members are connected by means of suitable electrical leads to the voltage source and act as the media for supplying electrical power to the heating elements. In order to utilize the three conductors from the source to provide the several levels of thermal output normally required, a bus-bar 39 may be provided between adjacent contactors such as between 35.1 and 36.1 or as shown fitted into member 38.1. Utilizing this latter alternative for example, an electrical circuit would be completed from the first source lead through contactor receiving member 38.1, contactor 16.2 the conductor of terminal end 16.1 heating element 14, and terminal end 15.1 to contactor 15.2 contactor receiving member 35.1 and the second source lead. A parallel circuit would also be completed from contactor receiving member 38.1 through contactor 19.2 and the conductor of terminal end 19.1 to heating element 17 and terminal end 18.1, contactor 18.2 and contactor receiving member 36.1 to the third source lead.

Referring more particularly to FIGS. 4 and 5 there is shown a hinging and grounding structure which embodies the present invention. The structure has as its main components, a hinge strap 40 secured to the cooking top, a pivotable hinge arm 41 and a bayonet member 42 secured to the carriage structure. The hinge strap 40 comprises a rigid base plate 44 from which extend upwardly both a pivot plate 45 and a rigid attachment member 46, which member is arranged to be mounted flush against the flange 29 around the cooking top opening. The member 46 is secured to the range frame at the cooking top opening by means of a self-tapping screw 47 or equivalent which holds the strap firmly against the opening flange 29.

Toward the upper end of pivot plate is secured a hinge pin 48 about which the heating unit hinge arm 41 is pivoted. Hinge arm 41 comprises a substantially inverted T-shaped member, with the hinge pin 48 adjacent the end of the central leg 41.1. At the outer tip of the leg 41.1 is a crowned portion 50 which rests against a resilient recurved section 51 of hinge strap 40 to firmly hold the hinge arm in position.

The horizontal section 52 of hinge arm 41 combines with the upper portion of terminal block 33 to receive and hold the bayonet arm 42 as can best be seen in FIG. 5. As illustrated, within the upper surface of terminal block 33, there is formed a longitudinal channel 54, whereby the said section 52 and the channel co-operate to form a tunnel 55 within which the arm 42 slidably fits. At opposed positions at the sides of the channel 54 are formed depressions 56 and 57 which are designed to nest therein ears 58 and 59 of grounding spring 60. The body of grounding spring 60 fits within the channel facing the terminal receiving end of the block. The terminal block is held together by means of two screws 61 and 62 which intersect the channel and are secured in a suitable manner to the horizontal section 52 of hinge arm 41. In this manner the horizontal section 52 covers the channel to form the tunnel or passage, as mentioned. The horizontal section 52 has a stepped offset 63 which extends outwardly from the terminal receiving surface 64 of terminal block 33 into the opening 12. Within the riser section of the offset step is a rectangular aperture 65 which frames the tunnel opening.

The bayonet member 42 is fabricated to move easily into and out of the previously described tunnel. The bayonet arm therefore is bifurcated at its free end so that the forks or prongs 70 and 71 may fit snugly about the screws 61 and 62 upstanding in the tunnel 55. The bayonet member at its other end is secured to the support structure 23 and to the heating elements of the cooking unit, by two connections. The first of these interengages the bayonet member and the support structure by virtue of the fit of tongue 72 of the structure within matching slot 73 in the bayonet arm. It should be noted that tongue 72 is laterally positioned centrally along the portion of plate 24 which forms the base of the triangle of the support structure and is therefore adjacent the slot 73 in the vertical extension of the centrally positioned bayonet arm. It should be noted also that the slot 73 has a considerably larger area than its mating tongue so that the bayonet arm is capable of only partially restricted movement in response to expansions and contractions of the heating element. The bayonet arm has an angled mid-section leading into the elongated shank section which terminates in the bifurcations previously described. Within the shank area a stepped strengthening bracket 75 is permanently affixed in any manner such as welding to the underside of the bayonet arm. The other end of the stepped bracket is also permanently affixed to the travel arresting and grounding strip 77 which in the known manner has embosses or collars surrounding each of the terminal ends 15, 16, 18 and 19. This use of the stepped bracket is the second of the connections by which the bayonet arm is secured relative to the support structure and the heating elements. By using these two securing methods the bayonet arm is firmly but movably mounted to the support structure and securely affixed to the heating element sheaths through the grounding strip 77 and its integral collars.

With the cooking unit in its normal operative position as shown in FIGS. 1 and 2, the free end of the bayonet arm is held within the tunnel 55 with the screws 61 and 62 interjacent between the forks 70 and 71 of the bayonet arm as a result firmly fastening the cooking unit to the hinge assembly. In this operative position, a grounding path may be traced from the heating element sheaths to the cooking top as follows: from the sheaths of terminals 15, 16, 18 and 19 to their respective collars integrally in grounding strip 77, stepped bracket 75, bayonet arm 42, resilient grounding spring 60, by surface contact and contact of screw 61 with hinge arm 41, to hinge strap 40 including its attachment strap 46, and finally through mounting screw 47 to the cooking top. As it well understood in the art, the cooking top is at numerous locations in electrical connection with the body (not shown) of the range, which is arranged to be grounded at the electrical service outlet (not shown).

The advantages of the present embodiment may best be illustrated by a description of the co-operation of the components as the heating unit is moved from the normal operative position to the raised position and then detached. To tilt the cooking unit to the raised position as shown in FIG. 3, the outer end of the heating element should be grasped and manually lifted. The firm connection of the bayonet within the tunnel causes the hinge arm 41 to follow and pivot about pivot rod 48 until the travel of the cooking unit is arrested by the contact of the bayonet arm 42 with the self-tapping screw 47. At the time this occurs, crowned tip 50 nests in the declivity 51.1 of the recurved section of the hinge strap to resiliently hold the hinge arm, terminal block and cooking unit in the raised position.

With the cooking unit in the raised position, the heating elements may be detached from the hinge by grasping the heating elements and sliding the heating unit up the plane so established. As the heating unit is slid up the plane, the terminal contactors leave their receiving members opening the circuit to the heating elements. Further movement of the heating unit up the oblique plane causes bayonet arm 42 to be withdrawn from the tunnel until it clears the aperture 65, at which time the heating unit is completely free of the hinge mechanisms.

With the heating elements removed, the terminal block

33 remains latched in position receptive to the return of the bayonet arm and the terminals, due to the nesting of crowned tip 50 within declivity 51.1. When the unit is to be returned to the hinge, the offset section 63 of the hinge arm, as can best be seen in FIGS. 3 and 4, acts as a guide for aligning the free end of the bayonet with the mating aperture 65 to thereby simplify the return process.

It should be noted that in the removal process, the electrical contact of the terminal conductors to the contactor receiving members is released before the ground path from the sheath is opened. On the return this ground path is closed prior to the closing of the power circuit. This safety feature is one the desirability of which is apparent to all skilled in the art.

A further feature of the present invention lies in the separability of the heating elements, the trim ring and the drip pan. As seen best in FIG. 2, the cooking top depending flange 29 has at its lower end an inwardly turned flange 29.1. The drip pan has its outer and upper edge a horizontal flange 30.1 proportioned such that it will rest easily on flange 29.1. It can also be seen that the horizontal rim 27 of the trim ring rests on the surface of the cooking top 11, and determines its relative positioning as is the usual practice. Further, the depending rim 28 terminates in an inwardly directed flange which is employed to seat the support plate radial extensions. Each radial extension of a support plate such as 25 (shown in FIG. 2) has as its outer edge shaped to conform to the inward flange 28.1. In this manner, the heating elements may be removed without removing the trim ring or drip pan; both of which may be readily removed singly for cleaning.

While there has been described what is at present considered to be the preferred embodiment of the invention, it will be understood that various modifications may be made therein, and it is intended to cover in the appended claims all such modifications as fall within the true spirit and scope of the invention.

What is claimed is:

1. In an electric range having a cooking top formed with a cutout for receiving a cooking unit and in which said cooking unit comprises an electrical heating element nested in said cooking top substantially parallel thereto in an operative position, a plurality of rigid terminal members extending from said heating element in stepped fashion, a terminal block including means for completing an electrical circuit to said terminal members, hinge means for controlling the movement of said terminal blocks pivotally between a first position and a second position oblique to said cooking top, means for resiliently latching said hinge means to thereby hold said terminal block in either said first or said second position, and a bayonet arm secured to and extending from said heating element collaterally with said terminal members, said terminal block including a channel for slidably engaging said bayonet arm to the hinge means to thereby render said heating element jointly pivotal with said terminal block, said bayonet arm slidably removable from said channel to thereby detach said heating element from said hinge means.

2. In an electric range having a cooking top formed with a cutout for receiving a cooking unit and in which said cooking unit comprises an electrical heating element nested in said cooking top substantially parallel thereto in a first operative position, a plurality of rigid terminal members extending from said coil in stepped fashion, an insulating terminal receiving member including means for completing an electrical circuit to said terminal members, hinge means for movement of said terminal receiving member between said first position and a raised second position oblique to said cooking top, means for resiliently latching said hinge means to hold said terminal receiving member in either said first or said second position, a bayonet arm secured to and extending from said heating element, and a channel formed in the upper surface of said terminal receiving member for releasably receiving said bayonet arm to thereby render said heating element jointly pivotal with said terminal receiving member and detachable therefrom, said bayonet arm slidably removable from said channel to thereby detach said heating element from said hinge means and said terminal receiving member.

3. In an electric range having a cooking top formed with a cutout for receiving a cooking unit and in which said cooking unit comprises a resistance heating element and means for supporting said heating element substantially parallel to said cooking top in an operative position, a plurality of rigid terminal members extending from said heating element in stepped fashion, an insulating member including means for completing an electrical circuit to said terminal members, means for hinging said insulating member pivotally between a first position substantially parallel to said cooking top and a second position oblique to said cooking top, means for releasably establishing said insulating member in either said first or said second position, a bayonet arm secured to and extending from said heating element, a channel formed in said insulating member, said hinging means including a bar section, said channel and said bar section combinedly forming a bayonet receiving tunnel for releasably retaining said bayonet arm to thereby render said heating element jointly pivotal with said insulating member, said bayonet arm slidably removable from said tunnel to thereby detach said heating element from said hinging means and said circuit completing means.

4. In an electric range having a cooking surface with a cutout therein for receiving a heating unit; a heating unit comprising a support structure, an electrical heating element resting on said structure in an operative position, a plurality of rigid terminal members extending from said element in a stepped manner, projecting means extending from said support structure and secured to said terminal members and collaterally spaced therefrom, means secured to said range adjacent said cutout and receptive to the advance of said projecting means and said terminal members to thereby provide means for hinging said heating element to said cooking surface, said hinging means pivotal between said operative position and a stable raised position, said receptive means including means for completing an electrical circuit from said terminal members of said heating element to a source of electrical power, said receptive means further including means for guiding the advance of said projecting means into engagement with said receptive means, said guiding means extending further towards said terminal members and said projecting means than said circuit completing means whereby said heating element is thereafter moved into electrical contact with said power source.

5. In an electric range having a cooking surface with a cutout therein for receiving a heating unit; a heating unit comprising a support structure, a coiled heating element resting on said structure, a plurality of rigid terminal members extending from said coil in a stepped manner, pronged means extending from said support structure and secured to said terminal members, said pronged means also extending away from said coil collaterally spaced from said terminal members, means secured to said range adjacent said cutout and receptive to said pronged means and said terminal members to thereby detachably hinge said heating unit to said cooking surface between an operative position parallel to said cooking surface and a predetermined raised inoperative position, said receptive means including circuit means for completing a grounding path from said terminal members of said coil to said cooking surface by way of said pronged means, said receptive means also including means for completing a circuit from said terminal members to a source of electrical power, said receptive means further including means for guiding said pronged means into and out of engagement with said receptive means, said guide

means extending further toward said terminal members and said pronged means than said circuit completing means whereby said heating unit is respectively moved into electrical contact with said power source after said engagement and said heating unit is moved out of electrical contact with said power source before said pronged means are moved out of engagement with said receptive means.

6. In an electric range having a cooking surface formed with a cutout for receiving a cooking unit and in which said cooking unit comprises a coiled, sheathed heating element with terminal members extending outwardly from said coil in stepped fashion; means for hinging said heating element for movement from a first position parallel to said surface to a second position oblique to said surface; said hinging means comprising a bayonet member extending from said coil collaterally with said terminal members, a hinge mechanism and a terminal block, said hinge mechanism stationarily secured beneath said cooking surface, said terminal block having connection to said hinge mechanism for movement from a position parallel to said surface to a position oblique to said surface cooperatively with said heating element, said terminal block further comprising a channel, means for covering said channel to provide a slot for receiving said bayonet member to guide said heating element into engagement with said terminal block, connectors in said terminal block for connecting said terminal members to a source of current on said engagement, and grounding means conductively disposed to said channel cover for providing a conductive ground path from said heating element sheath to said hinging mechanism via said bayonet member; said grounding means and said connectors cooperatively engaging with said bayonet member and said terminal members respectively to allow disassociation of said heating element from said terminal block physically and electrically.

References Cited in the file of this patent

UNITED STATES PATENTS

2,392,692	Price	Jan. 8, 1946
2,751,487	Vallorani et al.	June 19, 1956
2,910,570	Bremer et al.	Oct. 27, 1959