R. L. KENYON.

FLEXIBLE WINDOW FITTING FOR CANVAS COVERED BUILDINGS AND THE LIKE.

APPLICATION FILED MAR. 10, 1910.

1,068,503. Patented July 29, 1913.

Fig. 1.

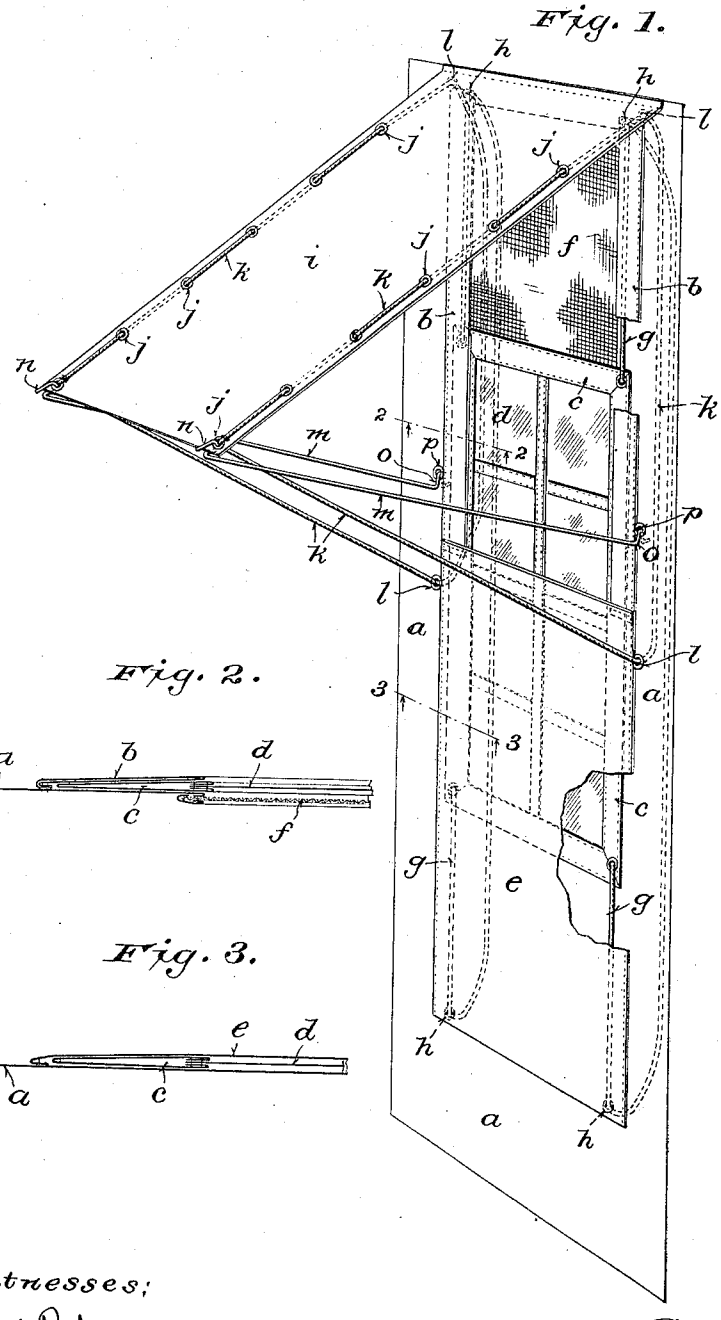

Fig. 2.

Fig. 3.

Witnesses:

Fred Palm

Chas. L. Goss.

Inventor:

Roy L. Kenyon

By Middleton Borden Bottum & Howsett

Attorneys.

COLUMBIA PLANOGRAPH CO., WASHINGTON, D. C.

UNITED STATES PATENT OFFICE.

ROY L. KENYON, OF WAUKESHA, WISCONSIN.

FLEXIBLE WINDOW-FITTING FOR CANVAS-COVERED BUILDINGS AND THE LIKE.

1,068,503. Specification of Letters Patent. Patented July 29, 1913.

Application filed March 10, 1910. Serial No. 548,391.

To all whom it may concern:

Be it known that I, ROY L. KENYON, a citizen of the United States, residing at Waukesha, in the county of Waukesha and State of Wisconsin, have invented certain new and useful Improvements in Flexible Window-Fittings for Canvas-Covered Buildings and the Like, of which the following is a specification, reference being had to the accompanying drawing, forming a part thereof.

The main objects of this invention are to provide portable canvas covered buildings, tents and the like, with flexible windows, awnings and screens which can be easily and quickly put up and taken down and packed in small compass for transportation and storage and to enable the users to open and close the windows and to raise and lower the awnings from the inside.

It consists in the novel construction, arrangement and combination of parts as hereinafter particularly described and defined in the claims.

In the accompanying drawing like characters designate the same parts in the several figures.

Figure 1 is a perspective view of window fittings comprising a window frame, window, screen and awning embodying the invention; Fig. 2 is an enlarged cross section on the line 2 2, Fig. 1; and Fig. 3 is a similar section on the line 3 3, Fig. 1.

a designates a section of the covering of a building or of the wall of a tent having a window opening therein and made of canvas or other suitable flexible material.

Flexible strips *b* made of canvas or the like, are stitched or otherwise secured to the wall *a* parallel with each other on opposite sides of and at a distance from said opening and with the edges of the wall next to the opening form guideways. A flexible window sash *c* also made of canvas or similar material and glazed with panes *d* of celluloid or other flexible transparent material stitched or otherwise secured in the sash has its opposite side edges fitted to slide in said guideways and is movable therein over and away from the window opening. Below or at one side of the window opening a piece *e* of canvas or similar flexible material is stitched or otherwise secured to the wall *a* in line with the strips *b*, forming continuations of the guideways below or beyond at one side of said opening, and with the wall *a*, a pocket to receive and protect the window when it is lowered or withdrawn from the opening.

A flexible screen *f* of wire cloth or other suitable material is stitched or otherwise fastened to the inner side of the wall *a* around the window opening. The screen serves not only to exclude insects from the building as usual, but also to connect the guideways across the window opening and to hold them and the window, when it is closed, in place without obstructing the view through the window or the window opening when the window is withdrawn therefrom. The opening being thus closed inside of the window, to enable an occupant of the building or tent to raise and lower or move the glazed window sash into and out of the opening, cords *g* are fastened to the corners of the sash and pass upwardly and downwardly therefrom parallel with and underneath the strips *b* loosely through grommets or eyelets *h* in the wall *a* above and below or on opposite sides and clear of the window opening. These cords may each be continuous on the inner side of the wall, and being accessible inside of the building, afford convenient means for opening and closing the window. They may be wound around or caught on belaying pins, cleats or hooks (not shown) and thus serve to fasten the window in its closed position, or in any desired position.

An awning and shutter *i* made of canvas or other suitable flexible material and stitched or otherwise fastened at the top to the outer side of the wall *a* above the window opening, is provided along each side at suitable intervals with grommets or eyelets *j*, through which cords *k* are loosely strung. These cords are fastened to the awning at or adjacent to its lower edge and pass loosely through grommets or eyelets *l* adjacent to the top and bottom of the window opening, thus affording means for raising and lowering the awning as well as fastening it in the desired position from the inside of the building or tent.

Braces *m* made of heavy wire or the like, and bent at the ends into hooks *n* and *o*, are engaged at their outer ends with the grommets or eyelets *j* in the lower corners of the awning and pass through grommets or eyelets *p* at the sides and adjacent to the bottom

of the window opening in the wall *a*, through which they may be thrust or withdrawn lengthwise.

When the awning is lowered or extended by means of the cords *k* it is held as shown in Fig. 1, in a downwardly and outwardly inclined position over the window opening by engaging the hooks *o* at the inner ends of the braces with the grommets or eyelets *p*. By disengaging the hooks *o* from the grommets or eyelets *p* and drawing the braces inwardly through said grommets or eyelets and folding them up against the inner side of the wall *a*, the awning is swung downwardly and inwardly against the outer side of the wall *a* and closes the window opening, thus serving as a shutter therefor. It may be fastened in this position inside of the building or tent by fastening the braces *m* folded up against the inner side of the wall *a* by any suitable means (not shown).

The pocket *e* and the awning and shutter *i* serve in addition to their other and ordinary functions, to protect the celluloid with which the sliding window is glazed, from the injurious effects of exposure to strong sunlight.

When the cover or wall section *a* is removed from a building or a tent provided with these window fittings is taken down, it may be rolled, folded or wrapped, with the glazed window sash *c*, screen *f*, awning and shutter *i* and cords *g* and *k*, around or with the braces *m* and fastened together in small compass and convenient form for transportation or storage.

Various changes in details of construction and arrangement of parts may be made without departure from the principle and scope of the invention.

I claim:

1. The combination of a flexible wall having a window opening, flexible strips attached on opposite sides of and at a distance from said opening to said wall and forming therewith parallel guideways which extend lengthwise beyond said opening far enough to hold the window in its open position, a flexible screen attached to and connecting said guideways across the window opening and holding them and the window, when closed, in place and a flexible sash glazed with flexible material and fitted to slide in said guideways over and away from said opening.

2. The combination of a flexible wall having a window opening, flexible strips attached on opposite sides of and at a distance from said opening to said wall and forming therewith parallel guideways, a flexible pocket secured to the wall at one side of the opening in line with the guideways, and of sufficient depth to receive and hold the window in its open position clear of said opening, and a flexible sash glazed with flexible material and fitted to slide in said guideways from the opening into the pocket and vice versa.

3. The combination of a flexible wall having a window opening, flexible strips attached on opposite sides of and at a distance from said opening to said wall and forming therewith parallel guideways extending beyond said opening on one side thereof far enough to receive and hold the window in its open position clear of said opening, said wall being provided with eyelets adjacent to the ends of the guideways; a flexible sash glazed with flexible material and fitted to slide in said guideways into and out of said opening, and operating cords attached to opposite sides of the sash and extending therefrom within and parallel with the guideways clear of the window opening and inwardly through said eyelets.

4. The combination with a flexible wall having a window opening, flexible strips attached on opposite sides of and at a distance from said opening to said wall and forming therewith guideways extending beyond said opening on one side thereof far enough to receive and hold the window in its open position clear of said opening, a flexible sash glazed with flexible material and fitted to slide in said guideways into and out of said opening, and a flexible screen secured to said wall over said opening, all of said parts being capable of being rolled together into small compass.

5. The combination with a flexible wall having a window opening, flexible strips attached on opposite sides of and at a distance from said opening to said wall and forming therewith parallel guideways extending beyond said opening on one side thereof far enough to receive and hold the window in its open position clear of said opening, a flexible sash glazed with flexible material and fitted to slide in said guideways over and away from said opening, a flexible screen secured to said wall over and on the inner side of said opening, and means for opening and closing the window from the inside, all of said parts being capable of being rolled into small compass.

6. The combination of a flexible wall having a window opening, flexible strips attached on opposite sides of and at a distance from said opening to said wall and forming therewith parallel guideways which extend lengthwise beyond said opening far enough to receive and hold the window in its open position clear of said opening, a flexible sash glazed with flexible material and fitted to slide in said guideways over and away from said opening, and a flexible awning and shutter fastened at the top to said wall above said opening, all of said parts being capable of being rolled or folded together into small compass.

7. The combination of a flexible wall having a window opening, flexible strips attached on opposite sides of and at a distance from said opening to said wall and forming therewith guideways which extend lengthwise beyond said opening far enough to receive and hold the window in its open position clear of said opening, a flexible sash glazed with flexible material and fitted to slide in said guideways over and away from said opening, a flexible screen attached to said wall around said opening, and a flexible awning and shutter secured at the top to said wall above said opening, all of said parts being capable of being rolled or folded into small compass.

In witness whereof I hereto affix my signature in presence of two witnesses.

ROY L. KENYON.

Witnesses:
CHAS. L. GOSS,
FRED PALM.

Copies of this patent may be obtained for five cents each, by addressing the "Commissioner of Patents, Washington, D. C."