Feb. 9, 1965 K. T. BUTTERY ETAL 3,168,974

COVERED CARTON

Filed Nov. 14, 1960 2 Sheets-Sheet 1

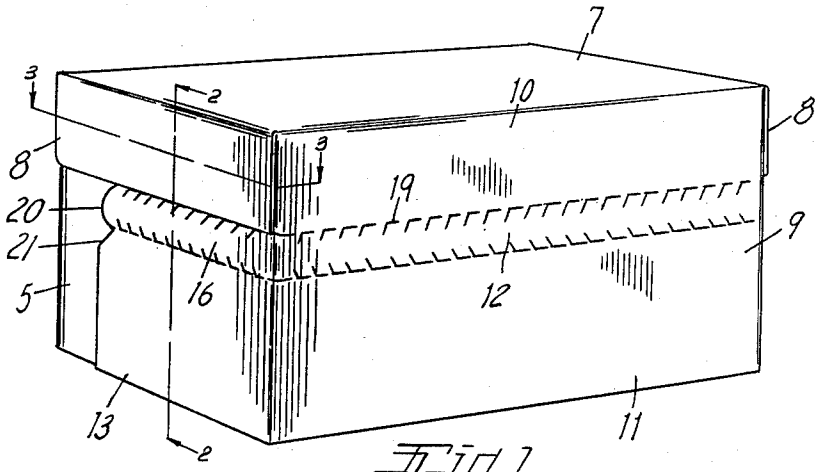

Fig. 1

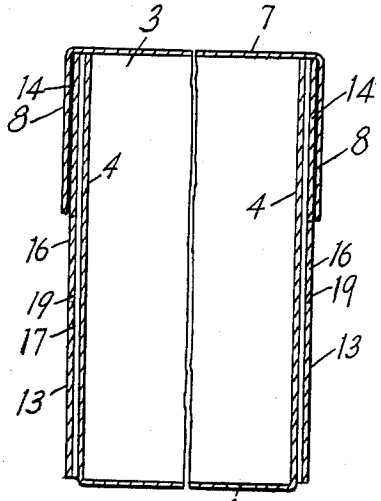

Fig. 2

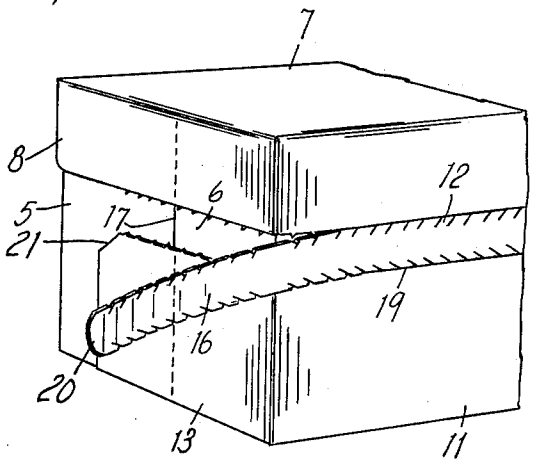

Fig. 5

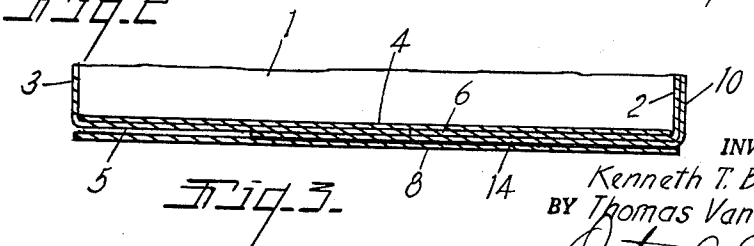

Fig. 3

INVENTOR.
Kenneth T. Buttery
BY Thomas Vander Lugt Jr.
Otto A. Earl
ATTORNEY.

Feb. 9, 1965 K. T. BUTTERY ETAL 3,168,974

COVERED CARTON

Filed Nov. 14, 1960 2 Sheets-Sheet 2

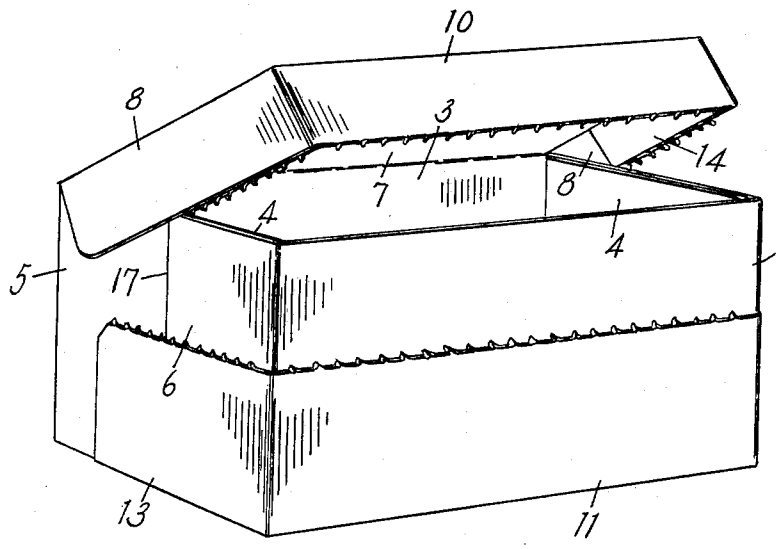

Fig. 6.

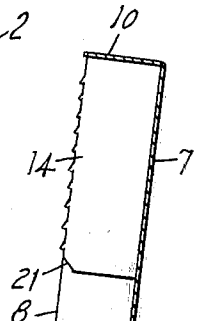

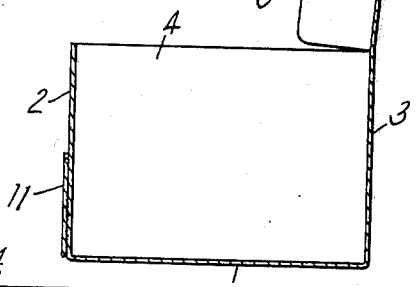

Fig. 4.

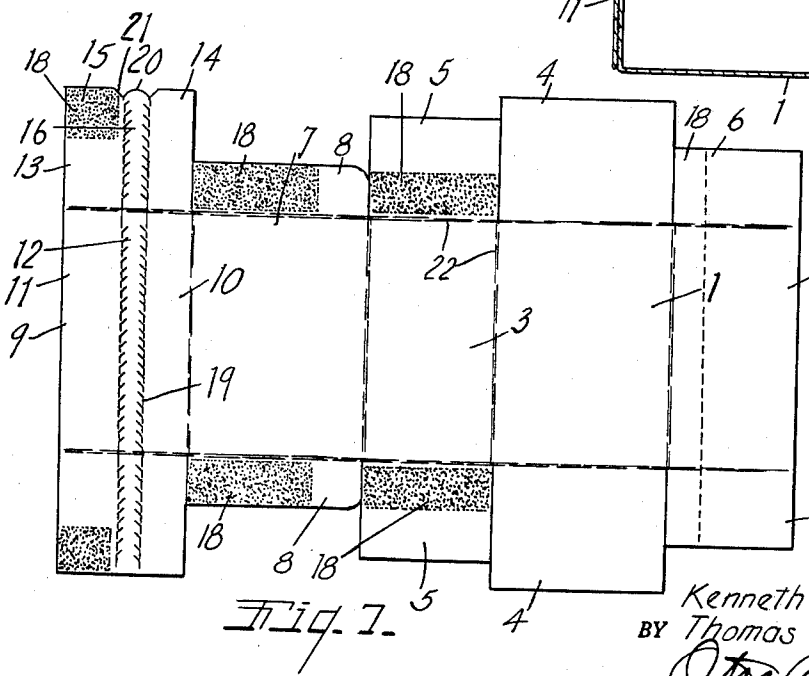

Fig. 7.

INVENTOR.
Kenneth T. Buttery
BY Thomas VanderLugt Jr.
Otis A. Earl
ATTORNEY.

United States Patent Office

3,168,974
Patented Feb. 9, 1965

3,168,974

COVERED CARTON

Kenneth T. Buttery and Thomas Vander Lugt, Jr., Kalamazoo, Mich., assignors to KVP Sutherland Paper Company, Kalamazoo, Mich.

Filed Nov. 14, 1960, Ser. No. 68,940
8 Claims. (Cl. 229—51)

This invention relates to covered cartons. The main objects of this invention are,

First, to provide a covered carton in which the contents as originally packaged are effectively sealed and at the same time a carton which may be quickly opened and reclosed.

Second, to provide a carton having the hereinbefore stated advantages which is adapted for the packaging of relatively heavy food products and the like.

Third, to provide a carton adapted for the packaging of relatively heavy products which may be formed of relatively thin or light gauge stock.

Objects relating to details and economies of the invention will appear from the description to follow. The invention is defined and pointed out in the claims.

A preferred embodiment of the invention is illustrated in the accompanying drawing, in which:

FIG. 1 is a perspective view of a carton embodying our invention.

FIG. 2 is an enlarged fragmentary view in vertical section on a line corresponding to line 2—2 of FIG. 1.

FIG. 3 is an enlarged fragmentary view in horizontal section on a line corresponding to line 3—3 of FIG. 1.

FIG. 4 is a cross sectional view with the carton open to expose the contents.

FIG. 5 is a fragmentary perspective view illustrating the first step in the opening of the carton.

FIG. 6 is a front perspective view of the carton partially opened.

FIG. 7 is a plan view of the blank from which the carton of the embodiment illustrated is formed.

The embodiment of our invention illustrated is formed of an integral blank of paperboard stock cut and scored to provide a bottom 1, front wall 2 and rear wall 3, which are hingedly connected to the edges of the bottom. The inner front wall member 2 is of slightly less height than the rear wall and the end walls 4 which are of the same height, see FIG. 7. Outer end wall members 5 are hingedly connected to the rear wall 3, and outer end wall members 6 are hingedly connected to the inner front wall member 2. The top 7 is hingedly connected to the upper edge of the rear wall 3 and is provided with end flaps 8 which are duplicates and hingedly connected to the end edges of the top.

An outer front wall member, designated generally by the numeral 9, comprises the upper section 10 and the lower section 11 connected by the tear strip 12. This outer front wall member is provided with end flaps designated generally by the numeral 13 and which comprises upper sections 14 and lower sections 15 connected by the tear strip 16, which is an extension of or a part of the tear strip 12. The outer front wall member 9 and its flaps are of the same height or vertical width. The outer end wall members 5 and 6 are complementary and are disposed edge to edge as indicated at 17 in FIG. 6. The outer front wall member flaps 13 are of such length that

they overlap the joint between the end wall members 5 and 6, see FIG. 6.

The cover end flaps 8 overlap and are adhesively secured to the flap portions 14 of the outer front wall member. Desirably no portion of the tear strip is adhered to the walls which it overlaps. Adhesive is conventionally shown at 18 on the inner sides of the outer end wall members 5, the cover flaps 8 and the portions 15 of the end flaps 13 below the lower severing score 19. The lower portions of the front wall 2 and the end wall members 6 are provided with adhesive on the outer sides thereof below the portion 18 indicated by the dot and dash lines in FIG. 7. It will be appreciated that this adhesive could be applied to the inner side of the outer front wall member 9 below the severing score thereof.

A desirable practice is for the manufacturer of the carton to adhesively secure the outer wall member to the inner front wall member along the adhesive zone 18 indicated, and the cartons are delivered or distributed in this condition. Thus arranged, the user erects and seals one set of end wall members. The carton is then filled and the other set of end wall members is closed and sealed. This provides a very strong and rigid carton or container well adapted for contents of considerable weight such, for example, as ice cream, cottage cheese, or the like.

The upper tear strip perforations 19 are desirably in alignment with the lower edges of the cover flaps, as is illustrated. The tear strip is of such width that it may be conveniently grasped and desirably has a finger tab 20 at one end thereof formed by notches 21 in the edge of one of the flaps 13. With this arrangement of parts, the tear strip can be conveniently grasped and removed by an outward pull, as is indicated in FIG. 5, freeing the cover for opening and closing. Other tear strip constructions such as the rip cord type may also be used. Adhesive is conventionally illustrated in some of the figures, see FIGS. 2, 3, 4 and 7.

Cartons embodying our invention are well adapted for packaging of relatively heavy food products, that is, heavy as compared to volume such, for example, as cottage cheese, ice cream and the like, and as the contents of cartons designed for such foods are commonly not all served at one time or the cartons completely emptied, it is desirable that they may be reclosed and provide an effective enclosure for the contents. The cartons filled and closed for distribution are capable of withstanding heavy stresses to which they are subjected in handling and merchandising such, for example, as stacking even when formed of relatively light stock.

One of the advantages of the applicant's structure is that when the container is filled and sealed, it cannot be opened and reclosed without such opening being evidenced. This comment is made for the reason that it is common and believed to be the general practice to package ice cream, for example, in containers provided with closure flaps which can be opened and closed without any evidence resulting from the fact that they have been opened and reclosed. One of the accomplished objects of applicant's invention is to provide a container which is effectively sealed when closed and may be quickly opened and may be reclosed to protect contents remaining in the container. It will be noted by reference to FIG. 7 that there is very little waste stock. In FIG. 7 the folding scores are indicated conventionally at 22.

The carton blanks are supplied to the packager in the flat and they may be readily set up with the aid of machines or devices which may be used in the packaging processes. Such machines or devices are not illustrated as they form no part of this invention.

We have illustrated and described our invention in a highly practical embodiment thereof. We have not illustrated or described certain modifications or adaptations which may be desirable for particular uses, as it is believed that this disclosure will enable those skilled in the art to adapt or embody our invention as may be desired for such particular uses.

Having thus described the invention, what is claimed as new and desired to secure by Letters Patent is:

1. A carton formed of an integral blank cut and scored to provide a bottom, a rear wall, an inner front wall member, and inner end wall members, rear and front outer end wall members on the end edges of said rear wall and said inner front wall member disposed in overlapping relation to said inner end wall members, said rear wall, inner front wall member and inner end wall members being of uniform height, a cover hingedly connected to the upper edge of said rear wall and provided with end flaps, an outer front wall member on the swinging edge of said cover provided with end flaps disposed in overlapping relation to said outer end wall members, said cover end flaps being disposed in overlapping relation with respect to and secured to upper portions of said end flaps on said outer front wall member, said outer front wall membr and its said end flaps having vertically spaced fracturing scores extending throughout the length thereof, the upper of said fracturing scores being substantially aligned with the lower edges of said cover flaps, said outer front wall member being secured to said inner front wall member and its end flaps being in overlapping relation with and being secured to said rear outer end wall members below the lower of said fracturing scores.

2. A carton formed of an integral blank cut and scored to provide a bottom, a rear wall, an inner front wall member, and inner end wall members, rear and front outer end wall members on the end edges of said rear wall and said inner front wall member disposed in overlapping relation to said inner end wall members, a cover hingedly connected to the upper edge of said rear wall and provided with end flaps, an outer front wall member on the swinging edge of said cover provided with end flaps disposed in overlapping relation to said outer end wall members, said cover end flaps being disposed in overlapping relation to and secured to upper portions of said end flaps on said outer front wall member, said outer front wall member and its said end flaps having vertically spaced fracturing scores extending throughout the length thereof, the upper of said fracturing scores being substantially aligned with the lower edges of said cover flaps, said outer front wall member being secured to said inner front wall member and its end flaps overlying and being secured to said rear outer end wall members below the lower of said fracturing scores.

3. A carton formed of an integral blank cut and scored to provide a bottom, a rear wall, an inner front wall member, and inner end wall members, rear and front outer end wall members on the end edges of said rear wall and said inner front wall member disposed in overlapping relation to said inner end wall members, a cover hingedly connected to the upper edge of said rear wall and provided with end flaps, an outer front wall member on the swinging edge of said cover provided with end flaps disposed in overlapping relation to said outer end wall members on said inner front wall, said cover end flaps being disposed in overlapping relation to and secured to upper portions of said end flaps on said outer front wall member, said outer front wall member and its said end flaps having a horizontally disposed fracturing zone therein and said front wall member being secured to said inner front wall member and its end flaps overlapping and extending transversely beyond the edges of the end flaps of said front outer end wall members and being secured to said rear outer end wall members below said fracturing zone, the lower edges of the cover end flaps being positioned above said fracturing zone.

4. A carton formed of an integral blank cut and scored to provide a bottom, a rear wall, an inner front wall member, and inner end wall members, rear and front outer end wall members on the end edges of said rear wall and said inner front wall member disposed in overlapping relation to said inner end wall members, a cover hingedly connected to the upper edge of said rear wall and provided with end flaps, an outer front wall member on the swinging edge of said cover provided with end flaps disposed in overlapping relation to said outer end wall members on said inner front wall and overlapping and being secured to said rear outer end wall members, said cover end flaps being disposed in overlapping relation with respect to and secured to upper portions of said end flaps on said outer front wall member, said outer front wall member and its said end flaps having elongated fracturing means integral therewith disposed above their securing means to said inner front wall and said outer end wall members, the lower edges of the cover end flaps being positioned above said elongated fracturing means.

5. A carton according to claim 4, wherein the front and rear outer end wall members are free of adhesive securement to each other.

6. A carton according to claim 4, wherein the front and rear outer end wall members are in abutting relationship.

7. An integral blank for forming a carton cut and scored to provide a bottom, a rear wall, an inner front wall member, and inner end wall members, rear and front outer end wall members on the end edges of said rear wall and said inner front wall member adapted to be disposed in overlapping relation to said inner end wall members, a cover hingedly connected to the upper edge of said rear wall and provided with end flaps, an outer front wall member on the swinging edge of said cover provided with end flaps adapted to be disposed in overlapping relation to said outer end wall members on said inner front wall, said outer front wall end flaps being of sufficient length to overlap and to be secured to said rear outer end wall members, said cover end flaps being adapted to be disposed in overlapping relation with respect to and to be secured to upper portions of said end flaps on said outer front wall member, means for securing said outer front wall end flaps to said rear outer end wall members, said outer front wall member and its said end flaps having elongated fracturing means integral therewith disposed above the means for securement of said outer front wall end flaps to said rear outer end wall members when said carton is erected, the cover end flaps being of such a length that their lower edges are positioned above said elongated fracturing means when said carton is erected and closed.

8. An integral blank for forming a carton cut and scored to provide a bottom, a rear wall, an inner front wall member, and inner end wall members, rear and front outer end wall members on the end edges of said rear wall and said inner front wall member adapted to be disposed in overlapping relation to said inner end wall members, a cover hingedly connected to the upper edge of said rear wall and provided with end flaps, an outer front wall member on the swinging edge of said cover provided with end flaps adapted to be disposed in overlapping relation to said outer end wall members on said inner front wall, said cover end flaps being adapted to be disposed in overlapping relation with respect to and to be secured to upper portions of said end flaps on said outer front wall member, said outer front wall member and its said end flaps having a generally horizontally disposed fracturing zone therein and said outer front wall member being adapted to be secured to said inner front wall member and its end flaps being of sufficient length to overlap and to be secured to said rear outer end wall members below said fracturing zone when a carton is erected from said

blank, the cover end flaps being of a length such that their lower edges are positioned no lower than the upper edge of said fracturing zone when said carton is erected and closed.

References Cited by the Examiner

UNITED STATES PATENTS

2,018,707	10/35	Daller	229—51 X
2,114,134	4/38	Weiss	229—51 X

2,348,377	5/44	Goodyear	229—44
2,836,343	5/58	Will	229—44
3,111,255	11/63	Skowronski	229—51

FOREIGN PATENTS

345,351	11/04	France.

GEORGE O. RALSTON, *Primary Examiner.*

EARLE J. DRUMMOND, THERON E. CONDON, FRANKLIN T. GARRETT, *Examiners.*