Oct. 13, 1925. 1,557,317

J. R. NOLAN

STAPLING MACHINE

Filed April 20, 1922 5 Sheets-Sheet 1

Fig. 1.

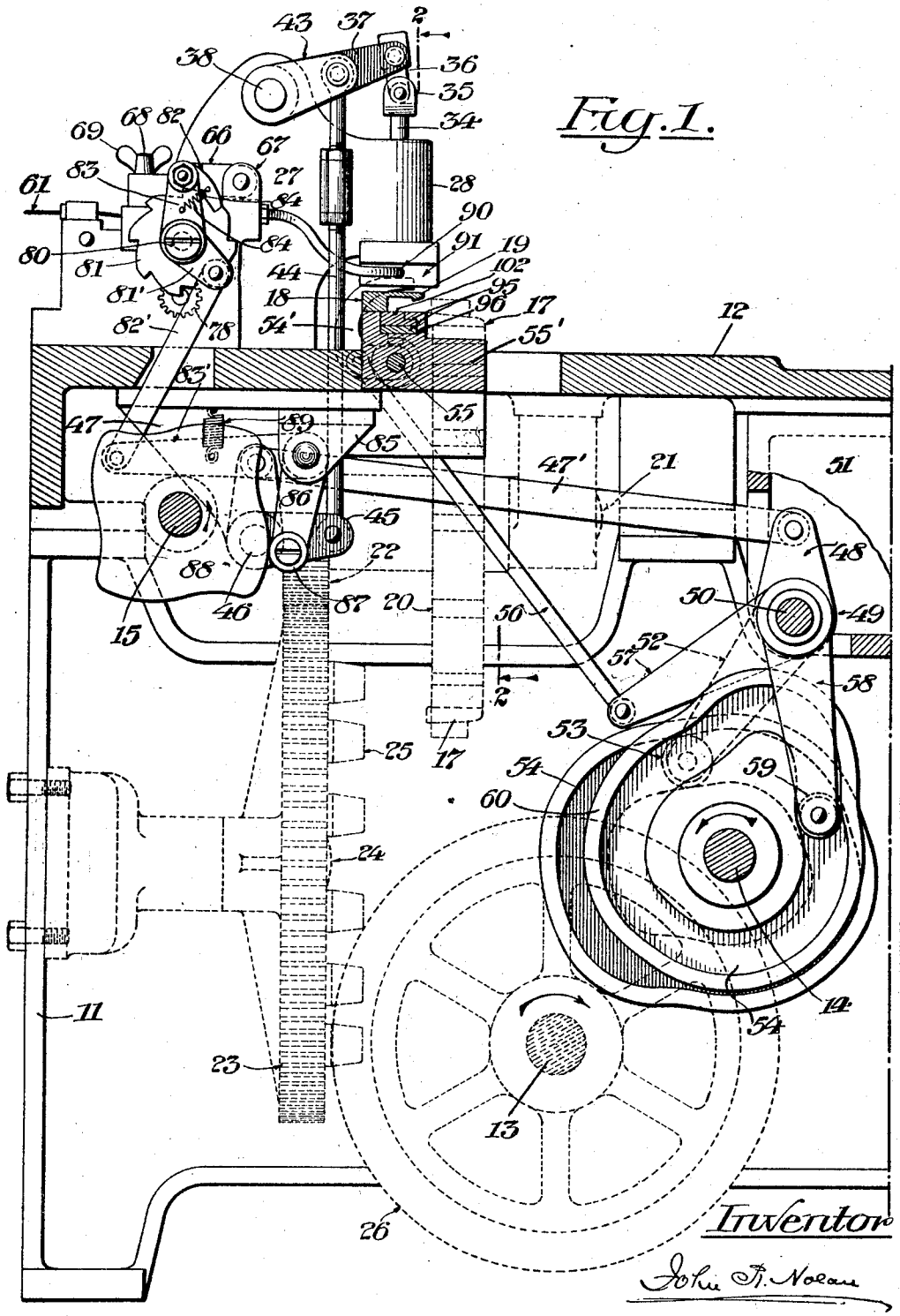

Inventor

John R. Nolan

Oct. 13, 1925. 1,557,317

J. R. NOLAN

STAPLING MACHINE

Filed April 20, 1922 5 Sheets-Sheet 2

Fig. 2.

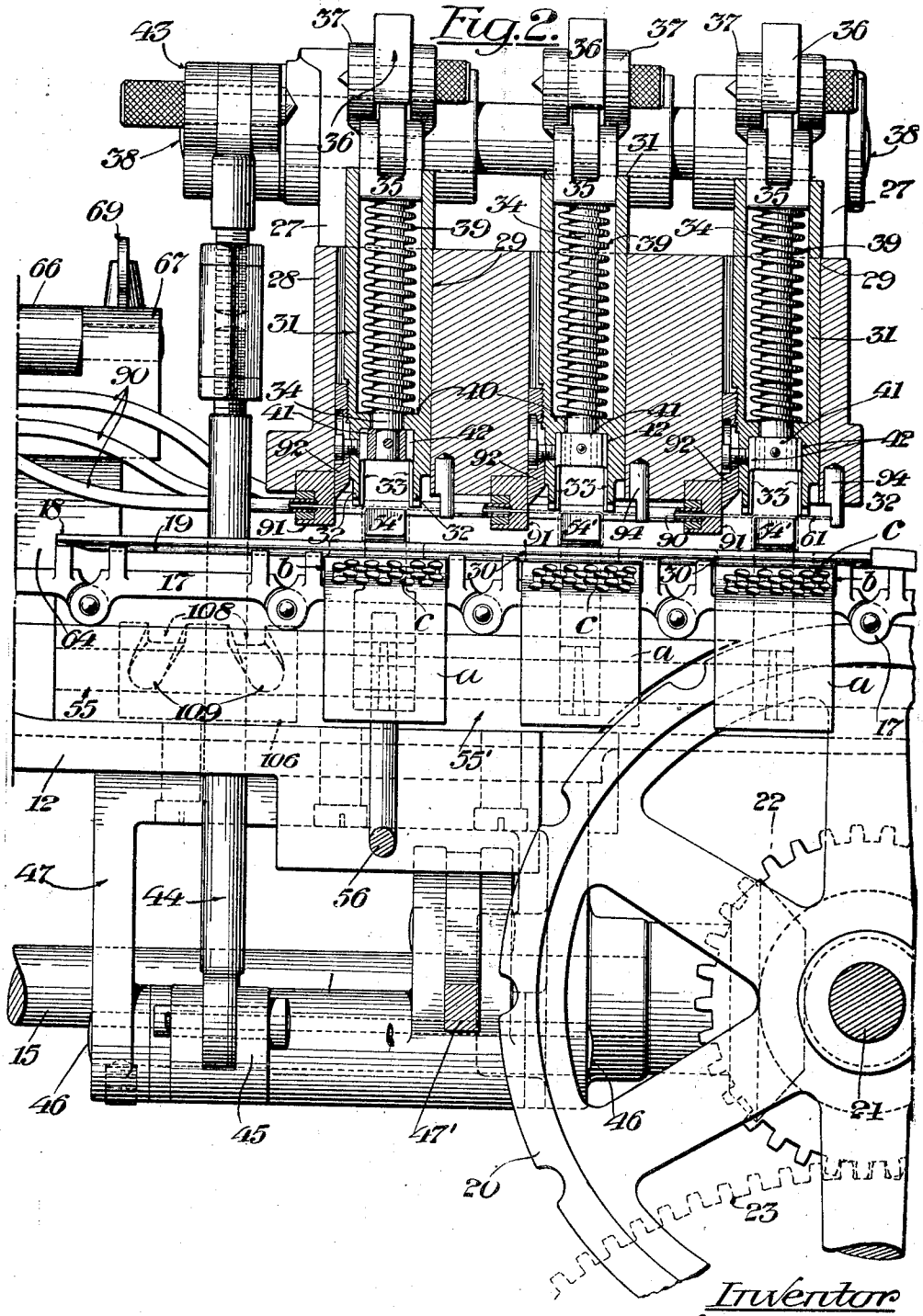

Inventor

John R. Nolan

Oct. 13, 1925. 1,557,317

J. R. NOLAN

STAPLING MACHINE

Filed April 20, 1922 5 Sheets-Sheet 3

Fig. 3.

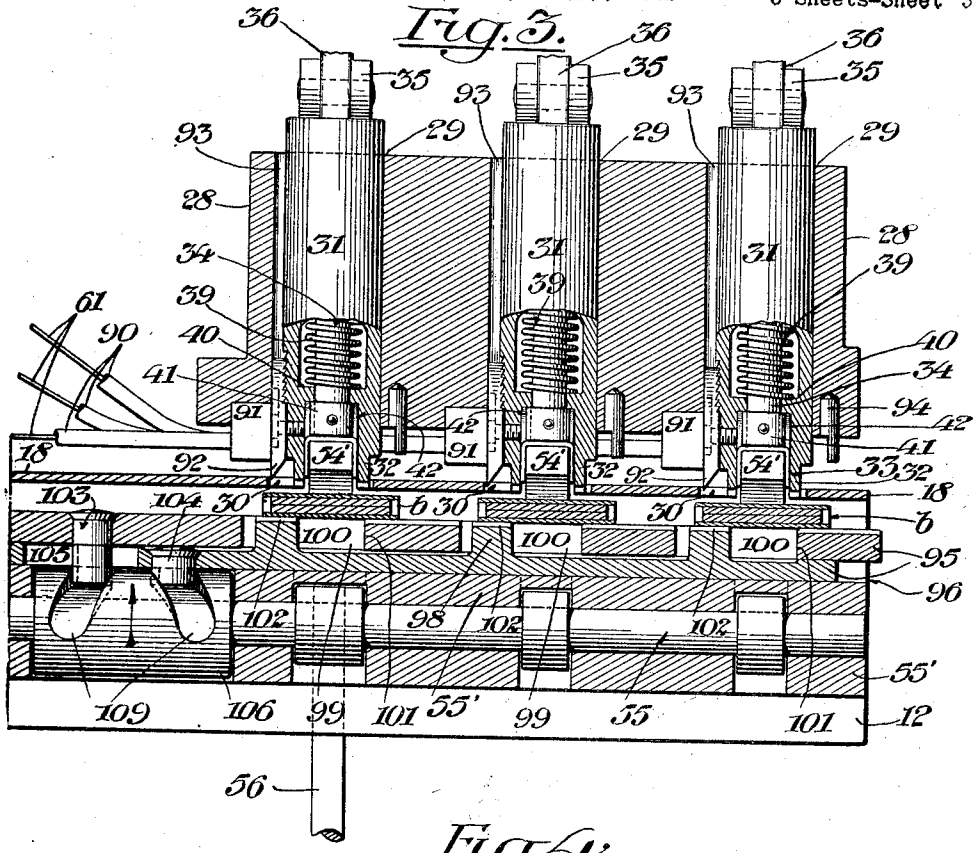

Fig. 4.

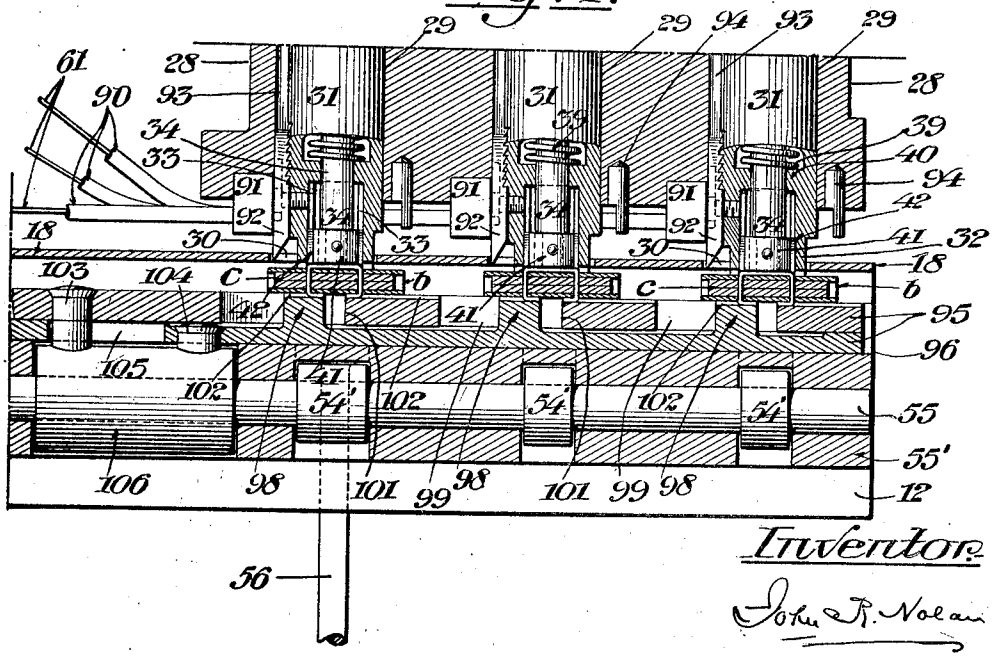

Inventor:

John R. Nolan

Oct. 13, 1925. 1,557,317

J. R. NOLAN

STAPLING MACHINE

Filed April 20, 1922 5 Sheets-Sheet 4

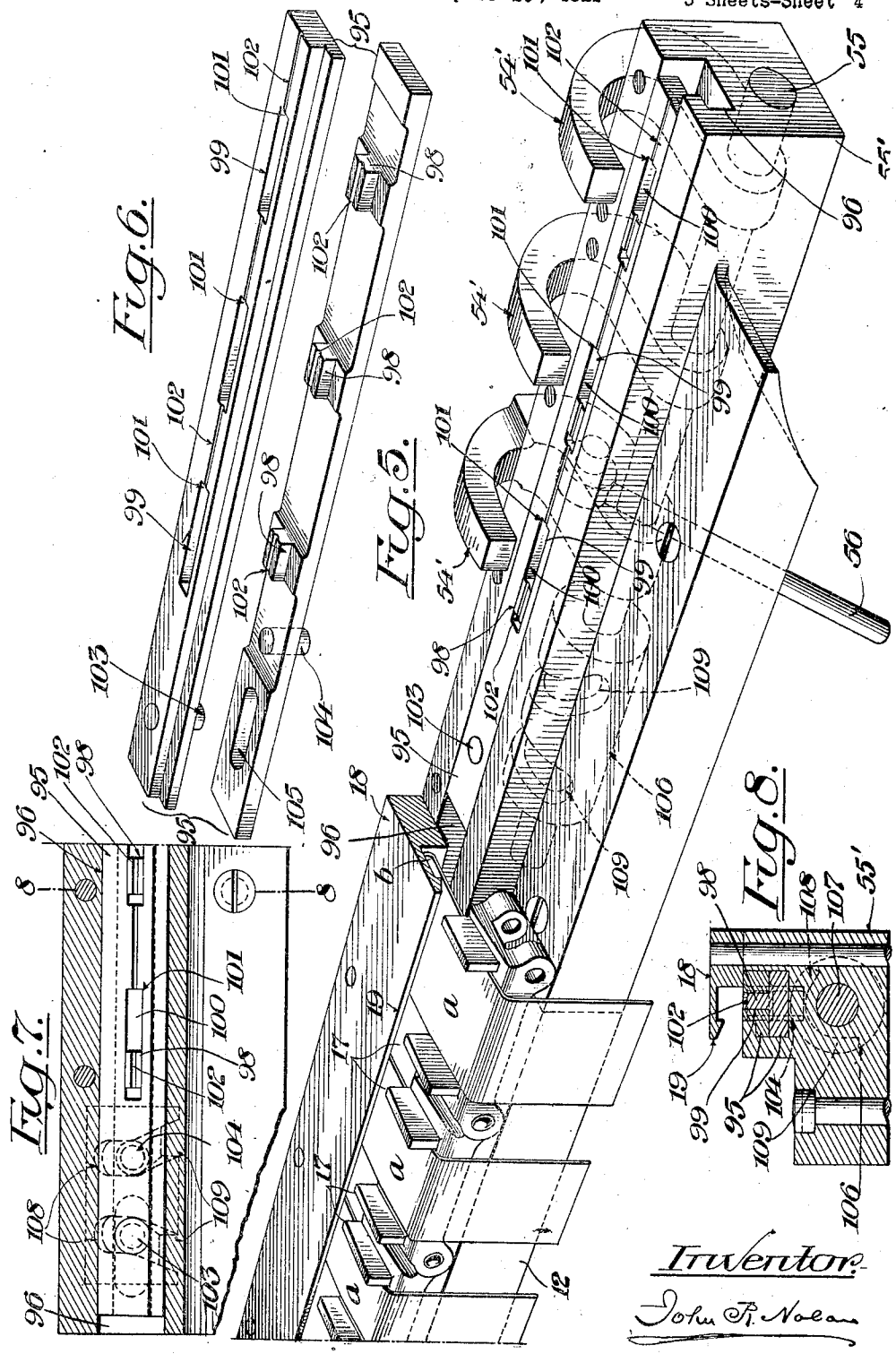

Oct. 13, 1925. 1,557,317

J. R. NOLAN

STAPLING MACHINE

Filed April 20, 1922 5 Sheets-Sheet 5

Fig. 9.

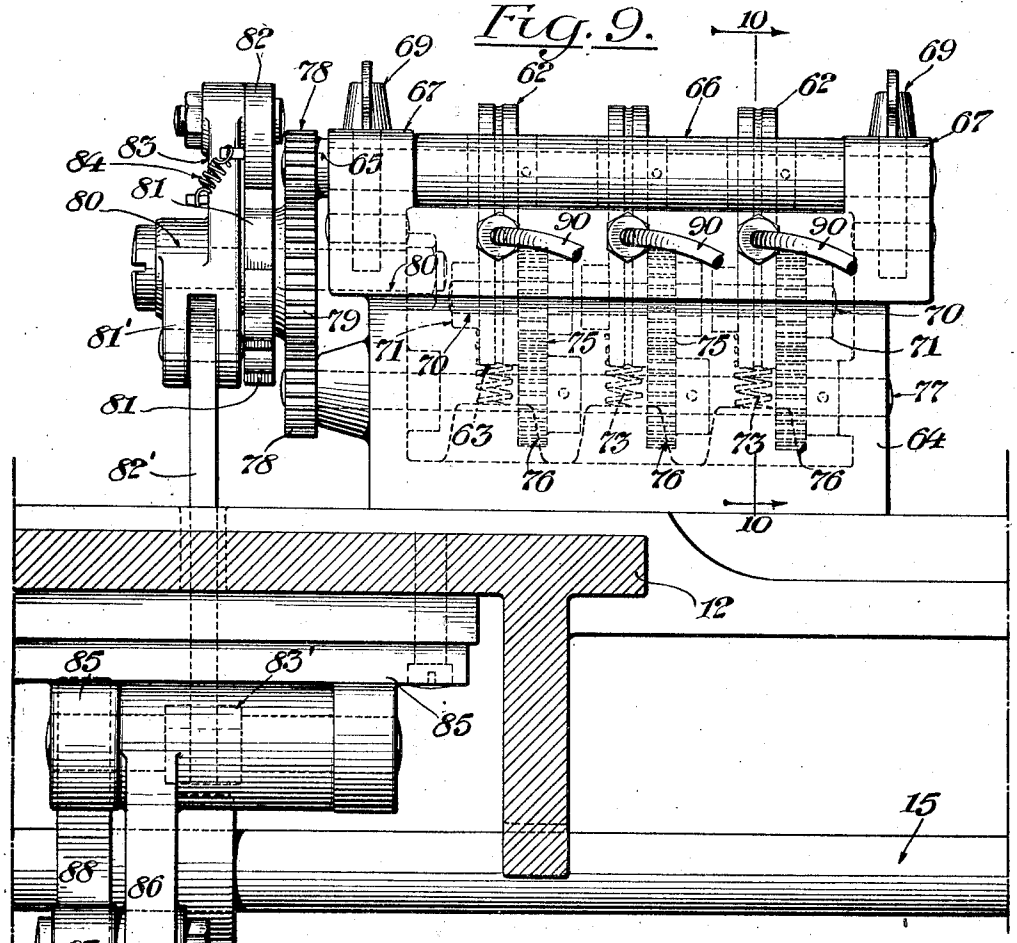

Fig. 10.

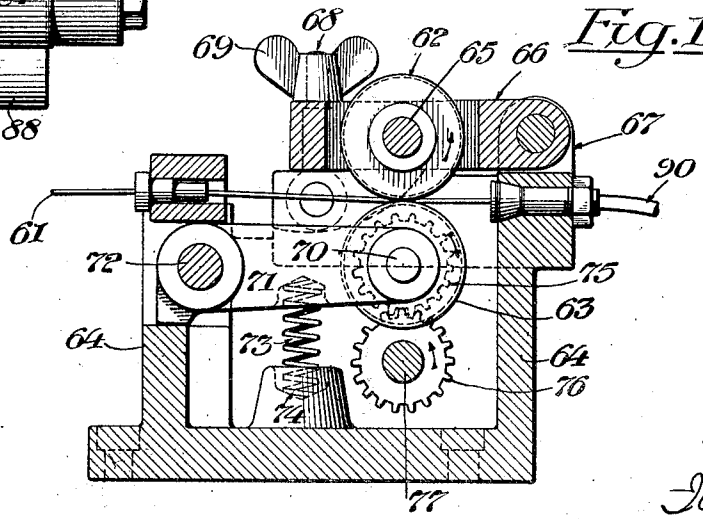

Inventor

John R. Nolan

Patented Oct. 13, 1925. 1,557,317

UNITED STATES PATENT OFFICE.

JOHN R. NOLAN, OF NEW YORK, N. Y., ASSIGNOR TO THE DIAMOND MATCH COMPANY, OF CHICAGO, ILLINOIS, A CORPORATION OF ILLINOIS.

STAPLING MACHINE.

Application filed April 20, 1922. Serial No. 555,696.

To all whom it may concern:

Be it known that I, JOHN R. NOLAN, a citizen of the United States, and resident of the city of New York, borough of Manhattan, in the county of New York and State of New York, have invented certain new and useful Improvements in Stapling Machines, of which the following is a specification.

This invention relates to stapling machines, having reference more particularly to machines employing staple forming, driving and clinching mechanisms.

The invention is especially applicable to machines for use in the production of so-called book matches comprising cards of matches stitched by wire staples to their respective covers; although, of course, a machine embodying the principles of the invention may be advantageously employed to staple sheets or books of different kinds or descriptions.

The invention is herein illustrated in connection with the book-match making machine forming the subject of U. S. Patent No. 1,468,310, dated September 18, 1923, which machine embodies an endless carrier by means of which associated card matches and covers are supported in co-operative relation to the stitching mechanism. The said carrier is constructed and arranged to receive a succession of spaced-apart covers and transport them to a location where card matches are delivered to succeeding series of covers; and the stitching mechanism is so constructed and arranged in relation to the path of the carrier that, immediately upon the delivery of the cards to the covers in the conveyer, wide staples are driven into and through the respective associated cards and covers, and the protruding legs of the staples are then simultaneously clinched against the covers in a manner to complete the stitching operation. Thereupon the carrier transports the united cards and covers to other devices which progressively effect and complete the book-forming operation.

The construction, organization and operations of the various instrumentalities constituting my improved stapling machine, in a preferred form of embodiment of the invention, will be hereinafter described in detail, and the precise scope of the invention then be defined in the appended claims; it being understood that the mechanisms herein disclosed may be greatly modified without departure from the fair spirit of the invention.

In the drawings—

Figure 1 is a side elevation of stapling mechanism embodying the principle of my invention, the mechanism being illustrated as applied to a book-match machine, parts of which are indicated in dotted lines.

Fig. 2 is a longitudinal vertical section, enlarged, through the stitcher head, and adjuncts, as on the line 2—2 of Fig. 1, showing the anvils in their forward position preparatory to the feeding of the wires across the anvils. In this view a portion of the carrier with book-matches therein and also a part of one of the sprocket wheels for the carrier are shown.

Fig. 3 is a similar section in a plane through the head and the staple clinching bars, but showing the mechanisms in staple-forming position.

Fig. 4 is a section similar to Fig. 3, but showing the mechanisms in the position which they occupy upon the completion of the driving and clinching of the staples.

Fig. 5 is a perspective view, partly in section, of a portion of the table of the book match machine with a portion of the carrier with covers therein, showing the clinching bars and the spaced-apart anvils of the stapling mechanism, including the block in which said bars and anvils are mounted.

Fig. 6 is a perspective view of the clinching bars separated.

Fig. 7 is a horizontal section through a portion of the block showing one end of the clinching bars and the rotary cam for actuating the same.

Fig. 8 is a section through said block and bars, on the line 8—8 of Fig. 7.

Fig. 9 is an elevation of the wire-feeding mechanism, the table being indicated in section.

Fig. 10 is a transverse vertical section through the wire-feeding mechanism, as on the line 10—10 of Fig. 9.

Referring to the drawings, 11 designates a supporting frame, including a table 12; 13 designates a main shaft, and 14, 15 designate two driven shafts appropriately geared together and with the main shaft, all said shafts extending longitudinally of the machine and being in parallelism.

17 designates an endless chain of links,

constituting a cover and card carrier, the upper run of which travels intermittently along a guide way on the top of the table. At one end of the table book-match covers *a* having folded end portions *b* are introduced into the links of the carrier, such covers thus being transported in spaced relation to each other toward the opposite end of the table. A bar 18, which is supported on the table and is arranged to overhang the end folds longitudinally of and adjacent the upper run of the carrier, is provided along its forward edge with a depending lip or shoulder 19 against which the free edges of the folds contact and are thereby maintained in folded condition during the progress of the covers with the carrier.

The chain passes about sprocket wheels mounted at the respective ends of the table, one of which wheels is shown at 20. On the shaft 21 of this wheel is a pinion 22 in mesh with the gear teeth of a pin wheel 23 which is mounted on a suitably-disposed stud-shaft 24. The pins 25 of the pin wheel engage a cam 26 fast on the main shaft 13, the contour of which cam is such that the pin wheel is intermittently rotated and the motion transmitted thence through the gearing to the carrier.

In the present instance the carrier in each movement thereof travels a distance of three links, and in each succeeding dwell of the carrier the covers contained in three links are not only supplied with card matches, but the three covers with their associated cards are presented to the action of the stitching mechanism, the preferred form of which will now be described.

Mounted on the table 12 and adjacent the path of the carrier, is a stitcher head comprising a standard 27 having a forwardly extending portion 28 which overhangs the bar 18 in proximity to the card inserting station, said portion 28 having a series (in this case three) of vertical guide bores 29 in spaced relation to each other and directly above and centrally of the folded ends of the respective covers borne by the carrier links at said station. The bar is provided with openings 30 directly below the respective bores 29.

Slidably mounted in each of the bores 29 is a hollow plunger 31, termed a staple-forming plunger, having a bifurcated depending portion whereof the spaced apart depending members 32 are vertically grooved in their inner sides, as at 33. The space between the inner sides of the members is substantially equal to the length of a staple between the legs of the latter, the grooves being properly proportioned to receive and support such legs when a staple is formed and positioned between the members, as hereinafter described.

Within each of the hollow plungers 31 is slidably mounted a plunger 34, termed a staple driver, having a head 35 which is connected by means of a link 36 with an arm 37 fast on a rock-shaft 38 journaled in the upper portion of the standard 27. Hence by actuation of the rock-shaft the staple driver can be forcibly reciprocated. A spring 39 confined within the hollow plunger and encircling the internal plunger 34 bears at its respective ends against the head 35 and a lower annular flange 40 within the plunger 31. The lower end of the driver plunger extends below the flange and is provided with a foot or collar 41 which, taking against the underside of the flange, limits the upward movement of the driver plunger in relation to the forming plunger. This collar is preferably equipped with diametrically opposite inset strips 42 which project laterally of the periphery of the collar to provide vertical feathers which are slidably fitted in the grooves 33 of the forming plunger. The strength of the spring 39 is such that when the driver plunger is depressed the latter and its associated forming plunger are positively and concurrently moved until the descent of the forming plunger is arrested, whereupon the driver plunger, overcoming the force of the spring, completes its descent independently of the forming plunger. The spring thus constitutes a resilient resisting element between the two plungers. Upon the elevation of the driver plunger the collar 41 thereof abuts against the flanged end of the forming plunger and positively raises the latter.

The three driving plungers 34 are reciprocated concurrently and positively by actuation of the rock-shaft 38 in any suitable manner. In the present instance one end of the rock-shaft bears a crank-arm 43 which is connected by means of a link 44 with one end of a crank-lever 45 that is hung on a shaft 46 supported in a bracket 47 depending from the table. The other arm of the crank lever is connected by means of a link 47′ with the up-projecting arm 48 of a rock-lever 49 which is fulcrumed on a shaft 50 in a bracket 51 beneath the table. The depending arm 52 of the lever carries a roll 53 in operative engagement with the race of a suitable cam 54 fast on the driven shaft 14, the contour of the race being such as to ensure through the lever and link connections just described the timely positive operations of the respective staple driving plungers.

Reciprocable into and from the paths of the bifurcated lower ends of the forming plungers 31 are anvil members comprising in the present instance hook-shaped arms 54′ which are fast at their lower ends to a rock-shaft 55 journaled in a suitably-disposed block 55′ on the table. The upper or

free end of each of the arms 54′ is preferably rectangular in cross-section, its width being substantially equal to the open space in the bifurcated foot of the adjacent plunger 31, whereby the latter in its descent embraces the proximate arm when such arm is positioned to overhang an opening 30 of the bar 18.

One of the anvil arms is connected by a link 56 with an arm 57 of a bell-crank lever fulcrumed on the shaft 50. The other arm 58 of the lever carries a roll 59 which runs in the race of an appropriate cam 60 fast on the shaft 14, the contour of the race being such that during the rotation of the cam the lever is positively actuated to effect the timely operation of the rock-shaft and its anvil arms.

A plurality of strands of wire, 61, (in the present instance three) from which staples are to be formed, are simultaneously advanced to locate the leading ends of the strands upon and across the respective anvil arms 54′ when the latter are positioned to overhang the openings 30 of the bar 18; suitable means being provided whereby staple lengths are cut from the ends of the respective strands. These strands, which are drawn from a series of suitably-disposed reels, (not shown) pass through the bites of paired feed-rolls 62, 63 (Figs. 1, 9 and 10) which are mounted within a suitable housing 64 on the table, the rolls being peripherally grooved to receive and guide the respective wires.

The upper rolls 62 are fast on a shaft 65 having its bearings in a vertically-adjustable frame 66. This frame comprises a rectangular structure whereof one side is pivoted in and between lugs 67 on the rear wall of the housing so as to overhang the latter. The end members of this frame are perforated for the free passage of up-standing screws 68 on the end walls of the housing, which screws are equipped with thumb-nuts 69, that, bearing upon the end members, may be manipulated to effect vertical adjustment of the frame and its rolls.

The lower rolls 63 are preferably mounted upon separate stud shafts 70 carried by arms 71 extending inwardly from a rock-shaft 72 journaled in the front wall of the housing, each of the arms, together with its shaft and roll, being yieldingly supported by a spring 73 seated in a socket 74 on the bottom of the housing. Thus the lower rolls 63 are maintained firmly yet yieldingly in contact with the respective upper rolls 62 so as to ensure the gripping of the wires. On one side of each of the lower rolls is a gear wheel 75 in mesh with a gear wheel 76 on a lower shaft 77 having its bearings in the end walls of the housing. The shafts 65, 77 are extended at one end beyond the housing and are provided with pinions 78 in mesh with an interposed spur wheel 79 mounted on a stud shaft 80 projecting from the adjacent end of the housing. Fast on the spur wheel is a ratchet-wheel 81 with the teeth of which engages a pawl 82 carried by one arm 83 of an oscillatory crank lever loose on the stud shaft 80, said pawl being preferably held in operative engagement with the ratchet wheel by means of a suitably-disposed spring 84. The other arm 81′ of the lever is connected by means of a link 82′ with the longer arm 83′ of a crank lever which is fulcrumed on a bracket 85 beneath the frame bed. The shorter arm 86 of the latter lever bears a roll 87 which is held in contact with an appropriate cam 88 on the driven shaft 15, by means of a spring 89 secured to the lever and the table; the contour of the cam being such that in its rotation the crank lever is oscillated to actuate the pawl connections in a manner to advance the ratchet-wheel 81 intermittently, and thus turn the feed rolls to effect the simultaneous feeding of the wires step-by-step. Each wire feeding impulse of the rolls occurs during the first part of each movement of the carrier.

The wires are guided from the feed rolls through guide tubes 90 which are suitably curved and positioned to terminate laterally of the upper or free ends of the respective anvil arms when the arms are in their forward position beneath the forming plungers. The bottom of the standard portion 28 is preferably provided with perforated blocks 91 which receive and support the ends of the respective tubes 90, the perforations of the blocks thus permitting the passage of the free ends of the wire transversely of the path of the plunger and above the respective anvils. (See Figs. 2, 3 and 4.) When the wires are thus positioned staple lengths are severed therefrom by suitable cutters. In the present instance each cutter comprises a blade 92 which is reciprocative vertically across the path of the wire. This blade is affixed to the lower portion of the forming plunger, and is vertically movable in a lateral channel 93 in the adjacent guide-bore of the standard portion 28, whereby in the initial descent of the forming plunger the blade 92 is forcibly depressed in a manner to sever a staple length from the leading end of the wire. Suitably-disposed depending studs 94 afford stops for the free ends of the respective wires when they are positioned on the anvils.

The wire-feeding, staple-forming and staple-driving devices above-described are so constructed, arranged and adapted to cooperate that during each interval of movement of the carrier the anvils are in their forward position; the feed rolls are actuated to feed the wires transversely of and above the anvils, and the driving plungers are partially depressed, thus similarly de-

pressing the forming plungers which in their initial movement actuate the cutters to sever staple lengths from the wires as previously explained, and then bend down the ends of the opposing wire lengths against the sides of the anvils in a manner to form staples whereof the legs are seated in the internal grooves of the respective bifurcated ends of the forming plungers. (See Fig. 3.) The anvils are then retracted from the staples.

Immediately upon the positioning of the cards *c* on their respective covers the driver plungers are positively depressed against the action of the springs 39, so as to drive the legs of the opposing staples into and through the respective covers and their associated match cards, whereupon the protruding ends of the legs of the staples are clinched against the under sides of the respective covers by the agency of a pair of oppositely-acting clinching bars 95. (See Fig. 4.) The operations just described occur in sequence during each movement and dwell of the carrier.

The clinching bars 95 are slidably arranged one upon the other in a guide-way 96 formed in the block 55′ on the table, directly below the staple-driving devices, whereby the said bars can be simultaneously reciprocated in opposite directions to each other. The lower bar is provided with upstanding projections 98 which slidably enter longitudinal slots 99 in the upper bar, said projections and the slots being in such spaced relation to each other that when the staples have been driven the protruding legs thereof depend into the spaces 100 between the projections and the opposing ends 101 of the slots of the respective bars. Hence when the bars are simultaneously moved inward the protruding legs of each staple are bent toward each other and against the under side of the adjacent cover by the action of the opposing portions 98, 101 of the respective bars, the tops of which portions are longitudinally grooved, as at 102, to receive the clinched staple legs.

In the present instance the upper and lower bars are provided adjacent one end with depending studs 103, 104 respectively, the stud 103 extending freely through an appropriate slot 105 in the lower bar. These studs enter peripheral cam grooves formed in a cam head 106 fast on one end of the rock-shaft 55 which carries the anvil arms. Each of the cam grooves comprises a straight portion 108 and an inclined portion 109, the portions 109 of the two grooves being inclined in opposite directions. The relation of the parts is such that the studs are engaged with the straight portions of the grooves when the anvils are forward and the clinching bars in outer or open position. Such studs remain thus engaged when the anvils are retracted initially from the staples and until the latter have been driven into the underlying articles. Thereupon in the continued retraction of the anvils the inclined portions of the cam grooves receive the studs and force them away from each other, thus moving the clinching bars in opposite directions to effect the simultaneous clinching of the staple legs. In the succeeding movement of the rock-shaft to swing the anvils to their forward or active position, the cam grooves act upon the studs to shift the clinching bars and space apart their clinching portions in readiness for a succeeding clinching operation.

By the mechanism just described it will be seen that the relative movements of the anvils and of the clinching bars are positively and effectively controlled by the operation of the rock-shaft.

I claim—

1. In a stapling machine, the combination with staple-forming mechanism including a reciprocative plunger, of a staple-driving plunger, means for positively reciprocating the latter plunger, and a resilient resisting element between the two plungers, said element normally effecting the positive and concurrent motion of the two plungers during the staple-forming operation and thereafter being compressed by the driving plunger to permit the independent driving motion of the latter plunger.

2. In a stapling machine, the combination with staple-forming mechanism, including a reciprocative tubular plunger, of a staple-driving plunger telescopically mounted in said tubular plunger, means for positively reciprocating the staple driving plunger, a spring encircling the staple driving plunger and tending to press the plungers longitudinally in opposite directions to each other, and a stop co-acting with the said plungers to limit their opposite directional movements and maintain them in idle position, said spring being non-compressible during the initial working stroke of the staple-driving plunger so as to actuate the staple forming plunger positively and concurrently with the driving plunger, and being thereafter compressible by the driving plunger to permit the independent driving motion of the latter plunger.

3. In a stapling machine, the combination with staple-forming mechanism including a reciprocative plunger, of a staple-driving plunger extending axially and slidably through the forming plunger, means for positively reciprocating the staple-driving plunger, a resisting spring interposed between the two plungers, and a stop member on the acting end of the staple-driving plunger, said member being normally held in contact with the opposing end of the forming plunger by the force of the spring.

4. In a stapling machine, the combination with a reciprocative plunger having a staple-forming portion, a reciprocative staple-driving plunger movable relatively to the first-named plunger, of an anvil movable into and from the path of said staple-forming portion, a rock-shaft operable to effect the movement of said anvil at predetermined intervals in respect to the operation of the plungers, oppositely-acting clinching members positioned to receive the protruding legs of a staple when they are driven, a cam on said rock-shaft, and a connection between the said cam and the respective clinching members whereby said members are simultaneously moved in opposite directions to each other.

5. In a stapling machine, the combination with a reciprocative plunger having a staple-forming portion, a reciprocative staple-driving plunger in the first-named plunger, and means for actuating said plungers, of a rock-shaft, an anvil thereon movable into and from the path of the said staple-forming portion, means for oscillating said shaft, oppositely-acting clinching members positioned to receive the protruding legs of a staple when they are driven, and cam connections between the rock-shaft and the clinching members.

6. In a stapling machine, the combination with a reciprocative plunger having a staple-forming portion, a reciprocative staple-driving plunger in the first-named plunger, and means for actuating said plungers, of a rock-shaft, an anvil thereon movable into and from the path of the said staple-forming portion, means for oscillating said shaft, a pair of oppositely-movable bars having clinching portions between which the legs of a staple extend when they are driven, a cam member fast on said shaft, and operative connections between said cam member and the respective bars.

7. In a stapling machine, the combination with a staple-forming mechanism, including a rock-shaft and an anvil fast thereon, of a pair of oppositely-movable bars having complementary clinching portions, a cam member fast on said shaft, operative connections between said member and the respective bars whereby the bars are simultaneously moved in opposite direction to each other, and means for oscillating said shaft.

8. In a stapling machine, the combination with staple-forming mechanism including a reciprocative plunger, of a staple-driving plunger, means for positively reciprocating said plunger, a resilient resisting element between the two plungers, said element normally effecting the positive and concurrent motion of the two plungers during the staple-forming operation and thereafter being compressed by the driving plunger to permit the independent driving motion of the latter plunger, an anvil movable into and from the driving path of the staple-driving plunger, means for actuating said anvil at predetermined intervals in respect to the operation of the plungers, means for intermittently feeding wire across the anvil, and a wire cutter fast on the acting end of the staple-forming plunger.

9. In a stapling machine, the combination with staple-forming mechanism including a reciprocative plunger, of a staple-driving plunger, means for positively reciprocating said plunger, a resilient resisting element between the two plungers, said element permitting concurrent motion of the two plungers during the staple-forming operation and thereafter independent driving motion of the staple-driving plunger, an anvil movable into and from the driving path of the staple-driving plunger, means for actuating said anvil at predetermined intervals in respect to the operation of the plunger, means for intermittently feeding wire across the anvil, a wire cutter fast on the acting end of the staple-forming plunger, oppositely acting clinching members positioned to receive the protruding legs of a staple when they are driven, and means including connections with the anvil for actuating said clinching members.

10. In a stapling machine, the combination with a plurality of staple driving mechanisms in spaced relation to each other, of a pair of oppositely movable bars having pairs of clinching portions in operative relation to the respective driving mechanism, and means for simultaneously moving the said bars in opposite directions to each other.

11. In a stapling machine, the combination of a plurality of staple-forming mechanisms, each including a movable anvil, a plurality of staple-driving mechanisms associated with the respective forming mechanisms, a pair of oppositely-movable bars having clinching portions in operative relation to the respective driving mechanisms, and means for simultaneously operating said anvils, said means including connections whereby the said bars are simultaneously reciprocated in opposite directions to each other.

Signed at New York in the county and State of New York this 19th day of April A. D. 1922.

JOHN R. NOLAN.