Nov. 20, 1934. T. CAPPA 1,981,611

COMBINED CLEANER AND LIQUID DISPENSING APPARATUS

Filed June 15, 1934 2 Sheets-Sheet 1

Fig. 1.

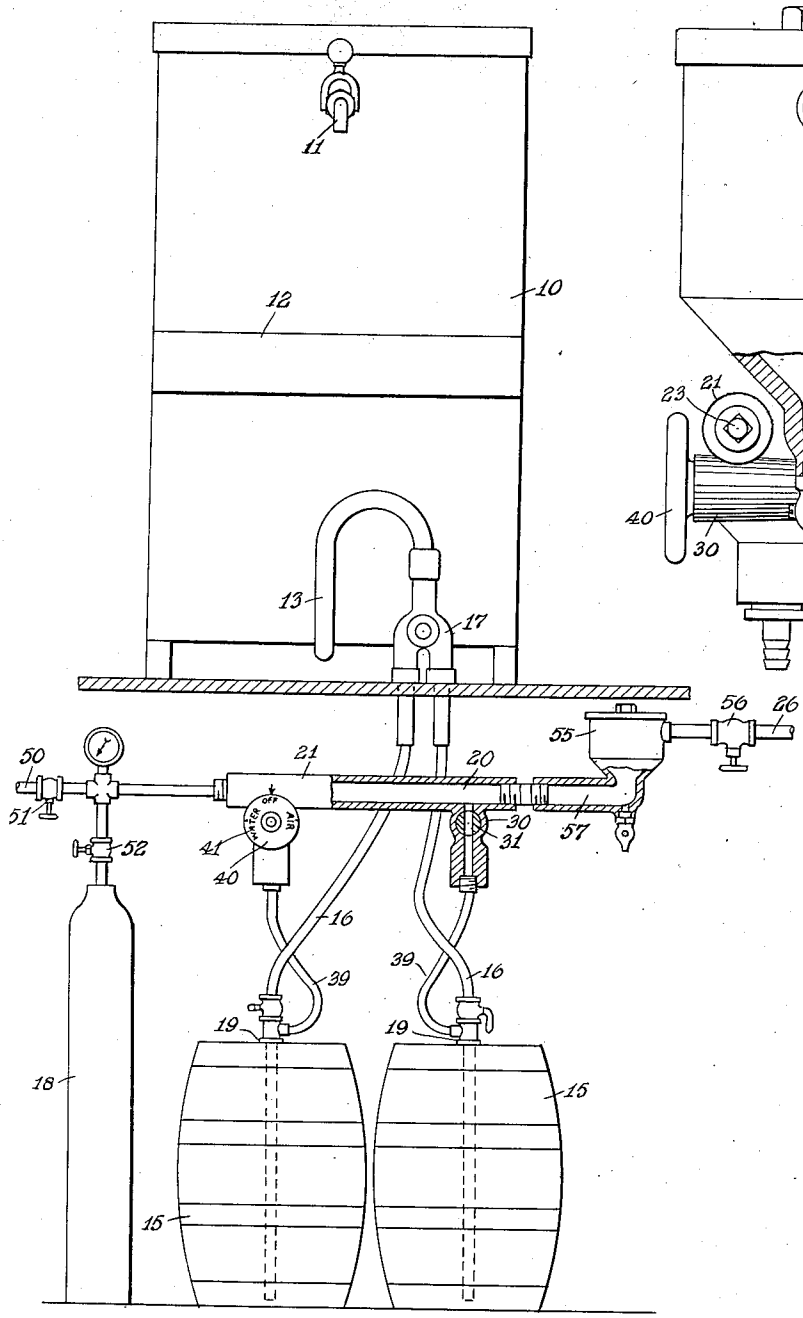

Fig. 2.

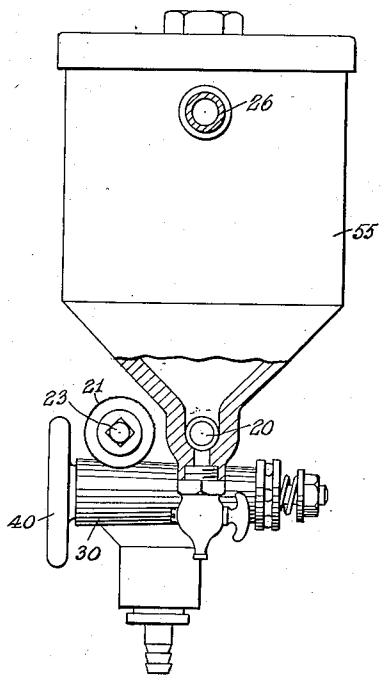

INVENTOR
THOMAS CAPPA
BY Fredk. F. Schuetz
ATTORNEY

Nov. 20, 1934. T. CAPPA 1,981,611

COMBINED CLEANER AND LIQUID DISPENSING APPARATUS

Filed June 15, 1934 2 Sheets-Sheet 2

Fig. 3.

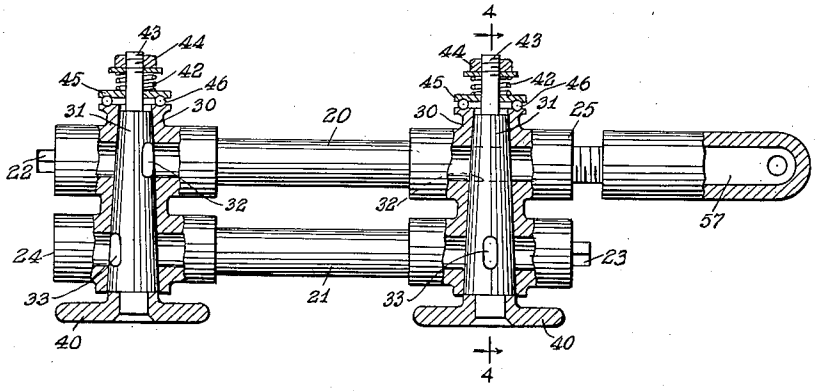

Fig. 4.

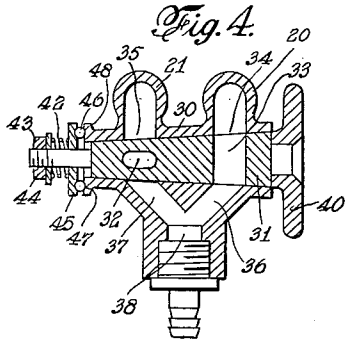

INVENTOR
THOMAS CAPPA
BY
ATTORNEY

Patented Nov. 20, 1934

1,981,611

UNITED STATES PATENT OFFICE

1,981,611

COMBINED CLEANER AND LIQUID DISPENSING APPARATUS

Thomas Cappa, Bloomfield, N. J.

Application June 15, 1934, Serial No. 730,750

4 Claims. (Cl. 225—12)

The invention relates to apparatus for dispensing liquids, such as beverages, by a gaseous medium under suitable pressure; and more particularly to a fitting for use therewith and whereby cleaning operations, more especially with reference to the dispenser apparatus, may conveniently be conducted when required.

The invention has for an object a simple and effective fitting element which may be introduced in the piping connections of the usual dispensing system and whereby not only may cleaning thereof be expeditiously effected, as by merely turning of a hand-wheel or like element, but the dispensing of the liquid may similarly be provided for through the said fitting. The desired cleaning operation includes the flushing out of the dispensing apparatus and liquid supply vessel with water and, if desired, also with a suitable cleaning liquid; and thereafter the supply of gaseous medium under pressure for dispensing of the liquid may be reestablished.

In carrying out the invention, there is provided a fitting or control member comprising two parallel pipes which are connected together by one or more transverse valve casings, depending upon the number of supply vessels to be controlled. Each pipe is sealed at one end and the two pipes are adapted for connection at their other ends respectively to a source of gas under suitable pressure and to a source of water supply.

A valve casing, furthermore, is provided with two ports adapted to be placed respectively in communication with ports of the said pipes, the two former ports terminating in a common discharge pipe which is adapted for connection to the supplying vessel for the liquid to be dispensed.

In the valve casing there is arranged, also, a rotatable duplex plug which is provided with through ports angularly displaced with reference to each other about the axis of rotation of the plug as well as being displaced axially along said plug. Each port is adapted for registry at its opposite ends with its corresponding pipe and casing ports when the plug is properly turned, the angular positioning of these through ports preventing delivery from both pipes simultaneously and whereby a supply of the gaseous medium or the water may be alternatively delivered to the supply vessel for the liquid to be dispensed, as well as admitting of cutting off both supplies, when desired.

Provision is made, also, for the introduction of a charge of cleaning liquid, for example prior to flushing out with water, as by introducing between the source of water supply and the fitting a container for receiving a charge of the cleaner liquid. Normally, this container is connected to the source of water supply; and there is provided in said connection a valve for interrupting temporarily the flow of water, whereupon a charge of cleaning composition may be introduced. Thus there may be supplied alternatively from the said vessel to the fitting the cleaner composition or water. Suitable hand-wheels or like means are provided for operating the different valve plugs and may be provided with suitable indicia to assist in their proper manipulation.

The nature of the invention, however, will best be understood when described in connection with the accompanying drawings, in which:

Fig. 1 shows in front elevation and part vertical section a liquid dispensing installation embodying the novel fitting member.

Fig. 2 is an end elevation, partly in section and on an enlarged scale, of the novel fitting member and associated liquid supply vessel.

Fig. 3 is an underneath view of the said fitting and supply vessel connection, partly in section and on an enlarged scale; and Fig. 4 is a transverse vertical section taken on the line 4—4, Fig. 3.

Referring to the drawings, 10 designates a dispenser cabinet embodying the faucet or spigot 11, tray 12 and the pipe 13 through which the liquid to be dispensed is received, the liquid passing through the pipe into the dispenser and being cooled therein and drawn for use in any well-known or special manner, the invention being concerned only with the means whereby such dispensing system may be flushed and cleaned as by forcing water and/or another cleaning liquid therethrough in place of the usual liquid dispensed, as will be hereinafter more fully set forth. The liquid to be dispensed is received in the usual manner from the bottom of a vessel or keg 15 through a hose connection or pipe 16 communicating with the supply pipe 13. It is preferred to provide at least two of these vessels so that when the contents of one become exhausted, the other may immediately be placed in service, as through the usual switching valve 17 introduced then in the supply pipe 13.

The liquid, as a beverage, is supplied from a keg or other container 15 through the drawing and cooling device 10, and is adapted to be dispensed therefrom through the application of a gas under suitable pressure, for example, carbonic acid gas taken from the tank 18 and introduced into the keg through the bung 19 in

the usual manner to supply the motive power for drawing the beverage.

In accordance with the invention, however, the supply of gaseous medium is not delivered directly to a container for the liquid to be dispensed, but there is interposed in the line a fitting member shown more particularly in Figs. 2 to 4, inclusive, and through which also the cleaning of the dispensing system may be accomplished.

This member comprises two pipes 20 and 21 arranged preferably parallel to each other and sealed at one end as at 22 and 23, respectively. The opposite ends of these pipes are adapted for connection to the source of gas supply and to a source of water supply, respectively. Thus, the open end 24 may be connected with the tank 18 and the end 25 with a pipe 26 supplying water under a suitable head.

The two said pipes 20 and 21 are connected together by a transverse valve casing 30, in the present instance two such valve casings being provided to accommodate the supply from the two supply vessels 15. A plug 31 fits a valve casing for rotation therein and is provided with two through ports 32 and 33, said ports being angularly displaced with reference to each other about the axis of rotation of the plug and also displaced axially along the plug. They are designed, furthermore, to cooperate with ports 34 and 35, respectively, located in the pipes 20 and 21 and with opposite outlets 36 and 37 of the valve casing, the two outlets 36 and 37 uniting to a common outlet 38 which is adapted for connection to the bung 19 through the pipe or hose 39.

The aforesaid arrangement admits of the delivery of either gas under pressure or water under suitable head to a vessel 15 and in accordance with the position of the said plug 31, one source of supply being cut off by the plug while the other is delivered through its corresponding port. A hand-wheel 40, bearing suitable indicia 41, may be provided upon a plug for conveniently rotating the same and for affording the desired control.

A plug, furthermore, may be yieldingly held to its casing by means of a spring 42 coiled about its projecting axial stem 43, being interposed between a nut 44 and a non-rotatable washer 45 slidable on the said stem. This washer carries also a number of balls 46 designed to register in sockets 47 of the casing flange 48 for locating positively a plug in the desired position as shown by the indicia.

By the foregoing arrangement, when a vessel 15 has been emptied and it is desired to flush out the dispenser 10 as well as the vessel 15 itself, the gas supply is cut off temporarily by correspondingly rotating the appropriate hand-wheel 40 which is set then to a position for admitting water to the system for flushing out the same, first filling the vessel 15 to the desired extent and then reapplying the gas under pressure by suitable manipulation of the said valve.

In order to conserve the gas in case the same is carbon dioxide, a supply of air under pressure may be provided through a supply pipe 50, there being introduced in the connection a valve 51 and in the connection from the tank 18 a valve 52 to temporarily shut off the latter and admit air from the former.

If it be desired, in addition to the aforesaid flushing action by means of water, to also apply a cleaning liquid such as a soda solution, or other powdered or liquid composition, etc., there may be interposed between the fitting and the source of water supply a vessel 55 for receiving a charge of the cleaner liquid. A valve 56 provided in the water supply pipe 26 will then be operated to cut off temporarily the flow of water to the said fitting (pipe 21); and the cleaning composition may be poured into the vessel to be discharged from the bottom outlet 57 into the said fitting.

I claim:

1. A fitting for use with a liquid dispensing apparatus including a supply vessel for the liquid and a discharge pipe therefrom, said fitting comprising two parallel pipes, each pipe being sealed at one end and adapted for connection at the unsealed end respectively to a source of gas under pressure and to a source of water supply and each having an outlet port; a valve casing located transversely of said pipes, connecting the same together and communicating with respective ports of the said pipes, said casing being provided with outlets opposite each of the pipe ports and terminating in a common outlet pipe for connection to the supply vessel; and a duplex plug fitting the valve casing and having through ports angularly displaced with reference to each other about the axis of rotation of the plug and displaced axially thereof for registry with the respective ports and outlets, whereby a supply of gaseous medium or of water may be alternatively delivered to the supply vessel or both cut off therefrom in accordance with the position of the said plug.

2. A fitting for use with a liquid dispensing apparatus including a supply vessel for the liquid and a discharge pipe therefrom, said fitting comprising two parallel pipes, each pipe being sealed at one end and adapted for connection at the unsealed end respectively to a source of gas under pressure and to a source of water supply and each having an outlet port; a valve casing located transversely of said pipes, connecting the same together and communicating with respective ports of the said pipes, said casing being provided with outlets opposite each of the pipe ports and terminating in a common outlet pipe for connection to the supply vessel; a duplex plug fitting the valve casing and having through ports angularly displaced with reference to each other about the axis of rotation of the plug and displaced axially thereof for registry with the respective ports and outlets, whereby a supply of gaseous medium or of water may be alternatively delivered to the supply vessel or both cut off therefrom in accordance with the position of the said plug; a container for a charge of cleaner composition interposed between the fitting and the source of water supply; and a valve for cutting off the water supply, whereby a charge of cleaner composition or water may be delivered to said fitting for delivery from the latter to the supply vessel.

3. A fitting for use with a liquid dispensing apparatus including a supply vessel for the liquid and a discharge pipe therefrom, said fitting comprising two parallel pipes, each pipe being sealed at one end and adapted for connection at the unsealed end respectively to a source of gas under pressure and to a source of water supply and each having an outlet port; a valve casing located transversely of said pipes, connecting the same together and communicating with respective ports of the said pipes, said casing being provided with outlets opposite each of the pipe ports and

terminating in a common outlet pipe for connection to the supply vessel; a duplex plug fitting the valve casing and having through ports angularly displaced with reference to each other about the axis of rotation of the plug and displaced axially thereof for registry with the respective ports and outlets, whereby a supply of gaseous medium or of water may be alternatively delivered to the supply vessel or both cut off therefrom in accordance with the position of the said plug; and a hand-wheel for rotating the duplex plug and bearing suitable indicia.

4. A fitting for use with liquid dispensing apparatus including a supply vessel for the liquid and a discharge pipe therefrom, said fitting comprising two parallel pipes, each pipe being sealed at one end and adapted for connection at the unsealed end respectively to a source of gas under pressure and to a source of water supply and each having an outlet port; a valve casing located transversely of said pipes, connecting the same together and communicating with respective ports of the said pipes, said casing being provided with outlets opposite each of the pipe ports and terminating in a common outlet pipe for connection to the supply vessel; a duplex plug fitting the valve casing and having through ports angularly displaced with reference to each other about the axis of rotation of the plug and displaced axially thereof for registry with the respective ports and outlets, whereby a supply of gaseous medium or of water may be alternatively delivered to the supply vessel or both cut off therefrom in accordance with the position of the said plug; a hand-wheel for rotating the duplex plug and bearing suitable indicia; and means for locating positively the said hand-wheel to correspond with the different operative positions of the plug.

THOMAS CAPPA.