D. REISER.

SIGNATURE GATHERER,

APPLICATION FILED JAN. 24, 1914.

1,192,561.

Patented July 25, 1916.

4 SHEETS—SHEET 1.

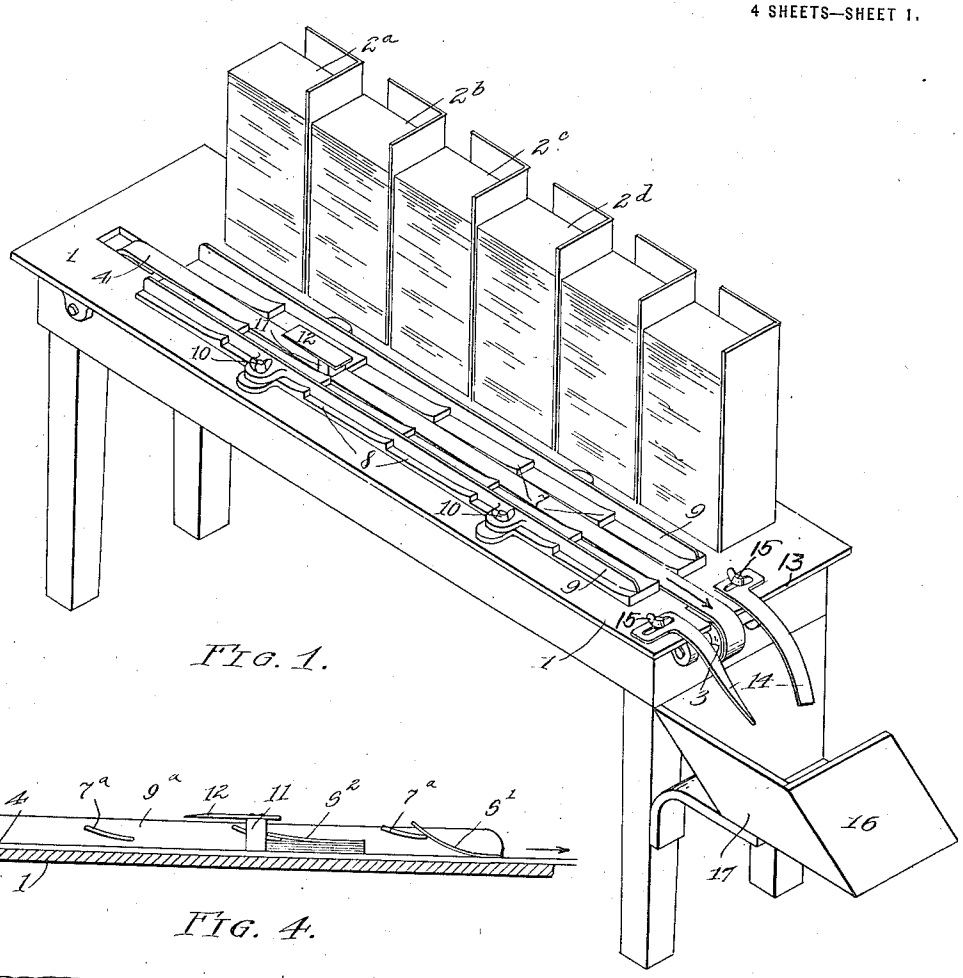

FIG. 1.

FIG. 4.

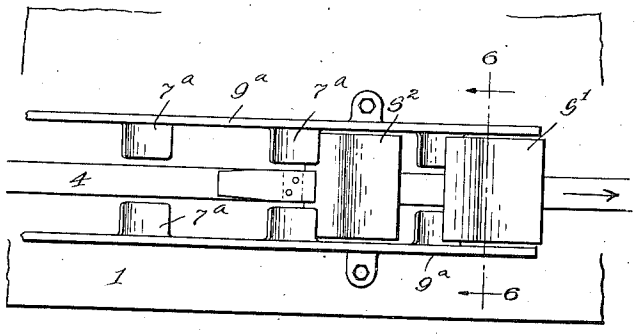

FIG. 5.

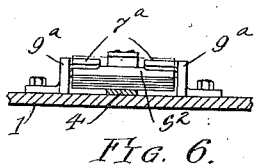

FIG. 6.

WITNESSES:

R. L. Bruck.

H. B. McBill.

INVENTOR,

Daniel Reiser

BY Hill & Smith

ATTY'S.

D. REISER.

SIGNATURE GATHERER,

APPLICATION FILED JAN. 24, 1914.

1,192,561.

Patented July 25, 1916.

4 SHEETS—SHEET 2.

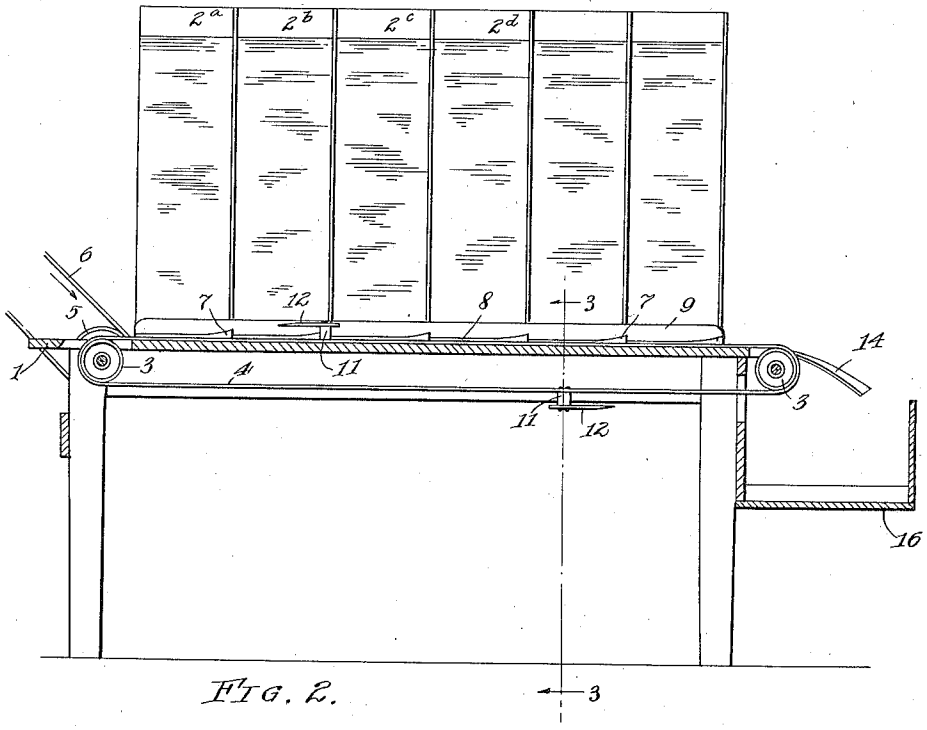

FIG. 2.

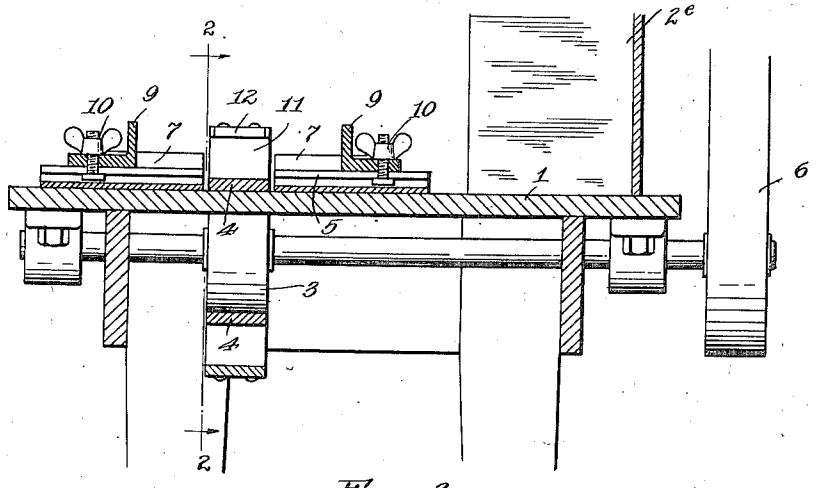

FIG. 3.

WITNESSES:

R. L. Bruck.

H. B. McGill

INVENTOR,

Daniel Reiser,

BY Hull & Smith

ATTYS

D. REISER.

SIGNATURE GATHERER,

APPLICATION FILED JAN. 24, 1914.

1,192,561.

Patented July 25, 1916.

4 SHEETS—SHEET 3.

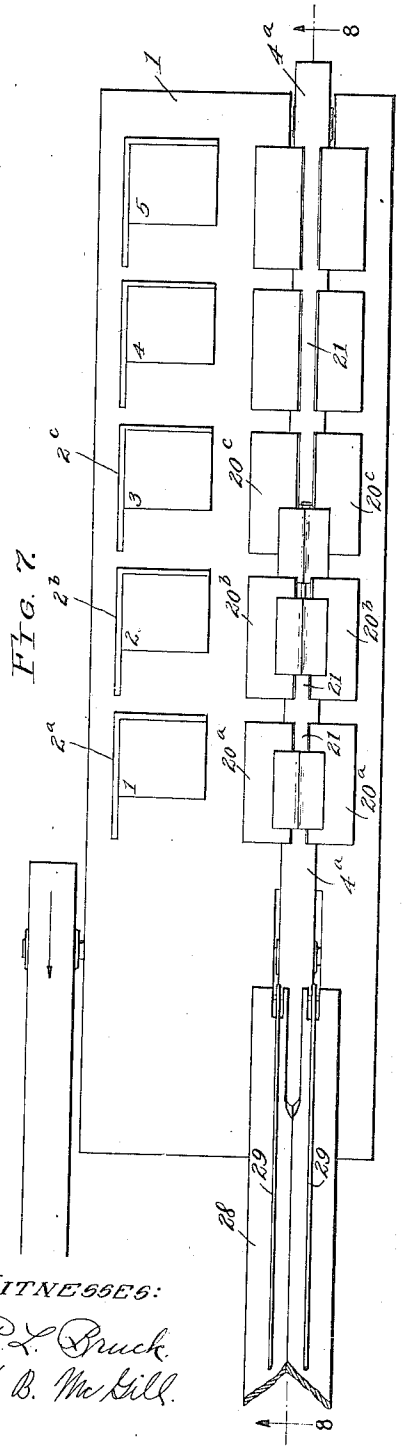

FIG. 7.

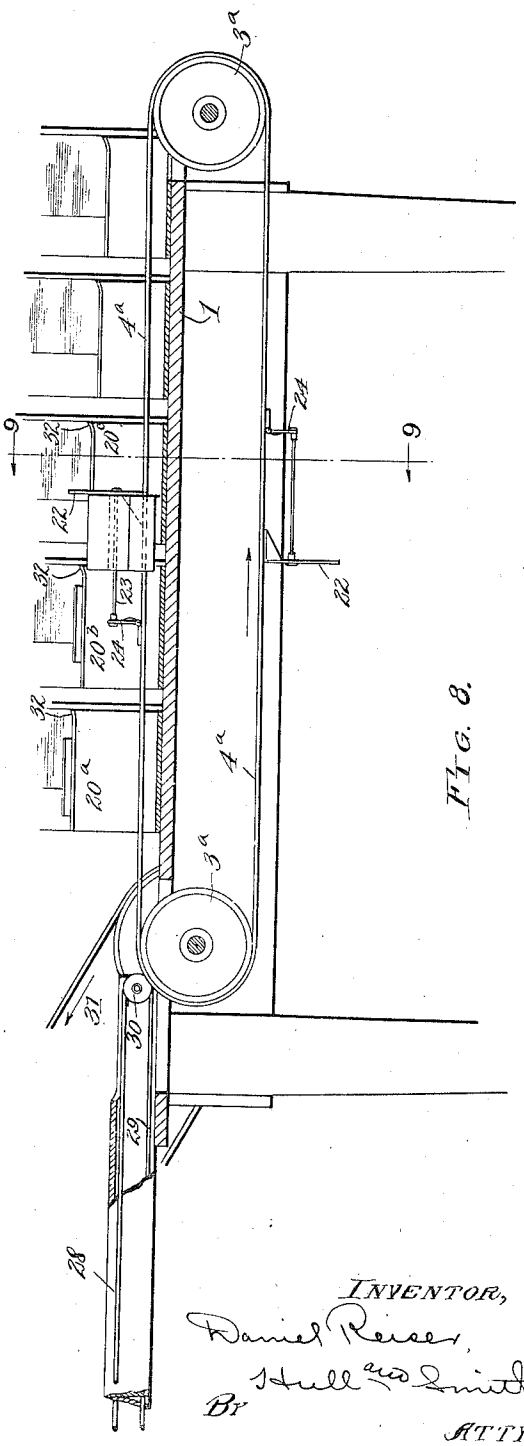

FIG. 8.

WITNESSES:

R. L. Bruck.

H. B. McGill.

INVENTOR,

Daniel Reiser,

By Hull and Smith

ATTYS.

D. REISER.

SIGNATURE GATHERER,

APPLICATION FILED JAN. 24, 1914.

1,192,561.

Patented July 25, 1916.

4 SHEETS—SHEET 4.

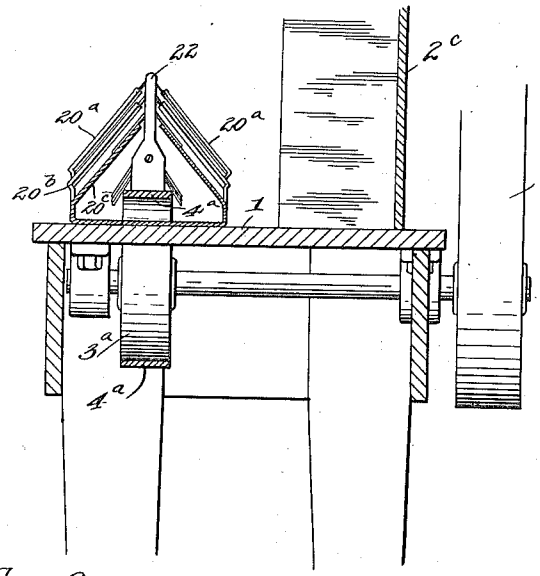

FIG. 9.

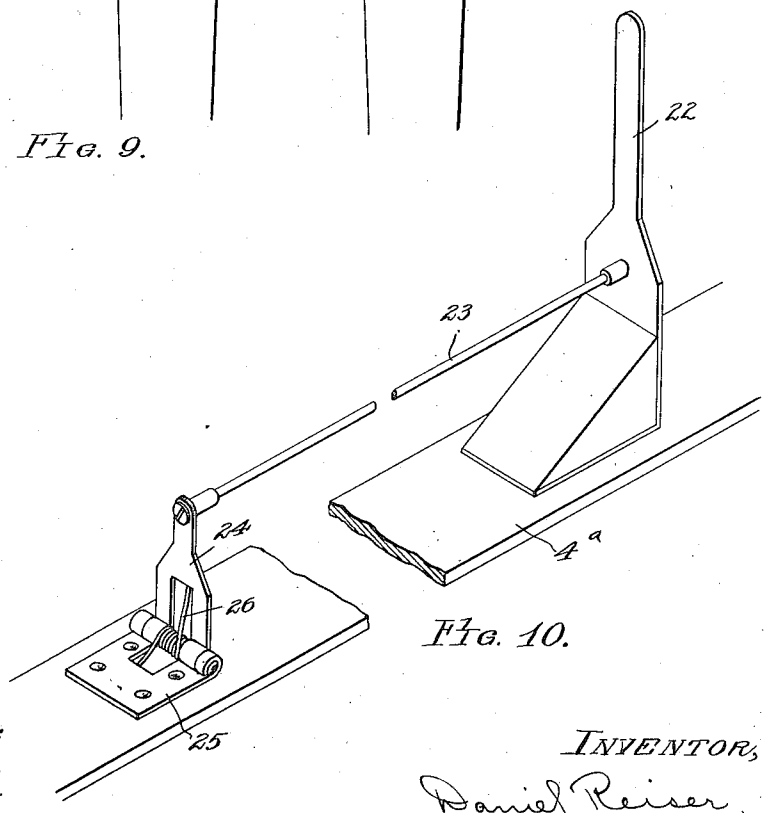

FIG. 10.

WITNESSES:

R. L. Bruck.

H. B. McGill

INVENTOR,

Daniel Reiser,

BY Hull and Smith

ATTY'S.

UNITED STATES PATENT OFFICE.

DANIEL REISER, OF CLEVELAND, OHIO.

SIGNATURE-GATHERER.

1,192,561. Specification of Letters Patent. Patented July 25, 1916.

Application filed January 24, 1914. Serial No. 814,151.

To all whom it may concern:

Be it known that I, DANIEL REISER, a citizen of the United States, residing at Cleveland, in the county of Cuyahoga and State of Ohio, have invented a certain new and useful Improvement in Signature-Gatherers, of which the following is a full, clear, and exact description, reference being had to the accompanying drawings.

This invention relates to assembling mechanism or mechanism by means of which flat articles of regular size and shape such as sheets, pamphlets, or signatures of paper can be picked up and stacked or arranged in a predetermined definite relation to each other.

The objects of the invention are the provision of a device of this character of maximum simplicity and reliability by the use of which the signatures or other articles can be assembled together with great celerity; the provision of new, improved and simplified means for effecting the ejection of the assembled articles from the mechanism and without danger of disarranging the same; while further objects and advantages of the invention will become apparent in the course of the following description.

It may be noted here that the embodiment of my invention described in the present application does not contemplate the total supplanting of manual operations but only the curtailment and hastening of such operations, although it will be obvious that many of the features here disclosed are susceptible of use with an automatic feeding mechanism if desired. It is also obvious that the number of stacks or stations could be increased or decreased at will, or that a machine having a large number of stacks can be employed for a small number of signatures without detriment to the operation.

Generally speaking my invention comprises the constructions and combinations recited in the claims hereto annexed and illustrated in the drawings accompanying and forming a part of this application, wherein:

Figure 1 is a perspective view of one form of my invention; Fig. 2 is a vertical, longitudinal, cross-sectional view of the same taken upon the line 2—2 of Fig. 3 and looking in the direction of the arrows; Fig. 3 is a vertical, transverse, cross-sectional view taken upon the line 3—3 of Fig. 2 and looking in the direction of the arrows; Fig. 4 is a detail view of a modified form of machine, the same being taken immediately at one side of the conveyer belt; Fig. 5 is a plan view of the arrangement shown in Fig. 4; Fig. 6 is a transverse, vertical, cross-sectional view taken upon the line 6—6 of Fig. 5 and looking in the direction of the arrows; Fig. 7 is a plan view of a third embodiment of the invention; Fig. 8 is a vertical, longitudinal, cross-sectional view taken upon the line 8—8 of Fig. 7 and looking in the direction of the arrows, but showing the conveyer belt and pulleys in side elevation; Fig. 9 is a vertical, transverse, cross-sectional view taken upon the line 9—9 of Fig. 8 and looking in the direction of the arrows; and Fig. 10 is a perspective view of a portion of the conveyer belt employed in the device illustrated in Figs. 7, 8 and 9.

Describing by reference characters the parts shown in Figs. 1, 2, and 3, 1 represents a suitable support such as a horizontal work table, and 2^a, 2^b, 2^c, 2^d, etc., denote stacking frames or open-sided boxes in which are piled the articles (or signatures) to be assembled. In the case illustrated, wherein the device is used for assembling books, the first signatures are stacked at 2^a, the second at 2^b, the third at 2^c, etc. Journaled to the table at each end of the stacking boxes is a pulley 3, the axes of these pulleys being substantially parallel to each other and their upper edges being substantially flush with the upper surface of the table. Around these pulleys is passed a conveyer belt 4 which passes closely along the top of the table immediately in front of the stacking boxes as shown in Figs. 1 and 3. Motion is communicated to this belt by any suitable means such as the belt pulley 5 and belt 6.

Carried by the table at each side of the belt 4 are a plurality of deflecting members 7, the members on opposite sides of the belt being substantially opposite those on the other side and also being spaced sufficiently far apart in a longitudinal direction to permit the reception of an article (signature) between each two successive members. For purposes of illustration I have shown these deflecting members as consisting of teeth formed upon the upper faces of elongated, side members 8, one side of each tooth (the side toward which the articles approach) being inclined and the other side being

abrupt. It will be obvious that other constructions can be employed to the same end.

Adjustably mounted at each side of the belt 4 is a guide bar 9 which can be secured at any desired distance from the other bar by suitable means such as the thumb nuts 10. In no case, however, may the guide bars be brought inwardly sufficiently far to cover the deflecting members completely.

Secured to the outer face of the belt is at least one, and preferably two, projections or fingers 11 arranged to project upwardly a considerable distance above the highest points of the deflecting members 7—7. These projections or fingers may conveniently consist of blocks secured to the belt and to their outer ends are secured the elongated tails 12. These tails are preferably formed of a soft and yielding material such as leather (though not necessarily so) and are preferably secured to the blocks so as to project a short distance thereover at the forward side, thus preventing any jumping of the articles or signatures.

At the discharging end of the belt 4 the table is formed with an abrupt transverse portion 13, and at each side of the discharge end of the belt there is provided a guide arm 14. These guide arms are parallel with the belt at their upper end, but are preferably deflected downwardly as shown in Fig. 1 and also have their free ends twisted toward each other as clearly shown in that figure. The distance between the inner edges of these guide arms is less than the width of a signature, adjustment being effected in any suitable way as by the thumb screws 15. Supported beneath the free ends of these guide arms is a receiving box 16 of the usual or any desirable form, but preferably having an inclined back 17 according to the usual practice. The pulleys in this embodiment are of rather small size as shown, and one of them is located closely adjacent to the discharging end of the table.

The conveyer belt being driven in the direction indicated by the arrows, a row of operatives stand in front of the table 1, there being one operative for each pair of stacking boxes, and these operatives remove one signature from each stack and lay it across the belt 4 and upon the members between adjacent deflecting members 7—7. The movement of the belt 4 causes the finger 11 to pick up the signatures in succession, the members 7—7 causing each signature to ride up over the succeeding signature so that the same are assembled in proper order. When this pile of signatures reaches the end of the belt, the natural course would be for the same to fall off the table head first in a mixed and irregular manner. With the arrangement shown, it is true that the forward ends of the signatures assume a downward inclination, but before they are able to slide forward over the arms 14—14, the quick movement of the belt around the pulley 3 (which has already been described as rather small) causes the tail 12 to strike the signatures a blow from above and throw them forcibly to the bottom of the stacking box 16 with their faces substantially parallel to the bottom of this box. This sudden blow from above delivered upon the rear end of the pile of signatures, forces the same between the arms 14—14 and also counteracts the inclination of the signatures which they have already assumed. The distance between the arms 14—14 and their curvature will depend upon the width of the signatures or other articles, their stiffness, and the speed of the belt. With a little trying it is possible to arrange these factors so that the signatures are all thrown perfectly flat against the bottom of the box.

In the above described embodiment each signature is carried over and deposited upon the top of the preceding signatures. In case it be desired to insert each signature beneath the following signature the arrangement shown in Figs. 4, 5, and 6 may be adopted. In these views 1 denotes the table and 4 the belt as previously, but the members 8—8 are omitted, and the deflector members are secured directly to the inner faces of the guide bars 9^a—9^a. These deflecting members are here shown as consisting of wings 7^a—7^a, said wings being spaced clearly from the table upon the side toward which the belt approaches the same. In addition each succeeding pair of wings is spaced farther above the table than the preceding wings so as to permit the gradually increasing book to pass therebeneath without binding. The signatures S^1, S^2, etc., are placed by the attendant between these guide bars with their forward edges overlapping the wings as shown in Figs. 4 and 5. Thereupon, upon the approach of the finger 11, the signatures are collected as clearly shown in Fig. 4. In some cases, however, it is not sufficient merely to stack the signatures one upon the other but it is necessary to insert the folded sheets one within the other. In a case of that nature I prefer to employ the arrangement illustrated in Figs. 7 to 10 hereof. The table 1 is employed as before together with stacking boxes 2^a, 2^b, 2^c, etc., pulleys 3^a—3^a and belt 4^a. Carried by the table at each side of the belt and in front of the various stacking boxes are receiving members 20^a, 20^b, 20^c, etc., each pair of which taken together produce the shape of an inverted V with its apex slotted as at 21. These slots 21—21 are in line with each other and with the center of the belt 4, but the members 20^a, 20^b, and 20^c are of progressively varying height.

Carried by the belt is an outwardly extending finger 22 arranged to project out

through the slots 21—21 as the belt is moved therepast, said finger being preferably braced securely so as always to project outwardly at right angles to the belt. Also preferably secured to this finger is a rigid rod 23 parallel to the face of the belt and secured at its opposite end to a yielding support 24. In the present embodiment this support is shown as hinged to a plate 25 attached to the belt, the hinge including a coiled spring 26. It will be understood that this or some other yielding connection is necessitated by the fact that the belt is forced to pass around pulleys 3^a—3^a, though these pulleys are preferably of much larger size than in the previous embodiment.

Carried by the table at the discharge end of the belt 4 is a V-shaped saddle or carrier 28 mounted with its apex upward and having at each side an endless conveyer tape 29 passing around suitable wheels 30. The receiving end of this saddle projects substantially to the discharge end of the belt 4 and its apex is cut away at that point as at 31 to permit the passage of the finger 22. In the present embodiment the end of each receiving member is flared outwardly at the point nearest its lower neighbor, as at 32, the relation of these members to the belt being such that the finger 22 will travel from the smaller to the larger of the same. The signatures being straddled in open condition upon these receiving members the movement of the finger 22 will carry each signature underneath the next succeeding signature and finally deliver the same to the end of the saddle 28 where they are picked up and carried away by the tapes 29. During the transporting of these partly open signatures, the rod 23, taken with the belt 4, forms a kind of saddle, since the signatures as they are withdrawn from the members 20^a, 20^b, etc., fall upon this rod so that their folds rest immediately thereover.

It will be obvious that the series 20^a, 20^b, 20^c, etc., could be arranged in opposite relation or that the belt could be run in the opposite direction whereupon each signature would be deposited outside of the succeeding signature instead of inside of the same. It will be also be obvious that the number of stacking boxes could be made as great as desired, or that only a part of the same may be used, or that mechanical means could be employed to transfer the signatures from the boxes to the receiving members. Also it will be understood that my invention extends to and comprehends variations in sizes, shapes, arrangements and construction of parts as well as to the particular devices here illustrated.

Having thus described my invention, what I claim is:—

1. The combination, with mechanism for transferring superposed sheets of paper, such mechanism consisting of a horizontal support and a pusher member movable therealong and arranged to shove said sheets along said support, of means for effecting an orderly discharge of said sheets from said mechanism, and comprising a pair of forwardly projecting downwardly deflected arms carried by said support and arranged to receive said sheets, said arms being spaced apart a distance less than the width of said sheets, and a receiving receptacle disposed beneath said arms and having an upright wall opposite the ends of said arms and spaced from said support a distance greater than the length of said sheets.

2. The combination, with mechanism for transferring superposed sheets of paper, such mechanism consisting of a horizontal support, a conveyer belt passing along the top thereof, and a projection carried by said belt and arranged to shove said sheets along said support, of means for effecting an orderly discharge of said sheets from said mechanism, and comprising a pair of forwardly projecting arms carried by said support and arranged to receive said sheets, said arms being spaced apart a distance less than the width of said sheets, and a striking member carried by said belt and arranged to strike said sheets from above and force them downwardly between said arms.

3. Mechanism for transporting and ejecting in an orderly manner piles of superposed flexible sheets, comprising, in combination, a substantially horizontal support, a pulley at the discharging end of said support, a second pulley at a distance from said first pulley, a belt passing around said pulleys, a projection carried by said belt and arranged to shove said piles of sheets along said support, a pair of forwardly projecting arms carried by said support, one at each side of said support and arranged to receive the sheets from said belt, the distance between said arms being slightly less than the width of said sheets, a receiving box beneath said arms, and a rearwardly projecting tail carried by said projection and arranged to strike said sheets from above as said projection passes around the first mentioned pulley, whereby said sheets will be deposited in said box in regular order.

4. Mechanism for transporting and ejecting in an orderly manner piles of superposed flexible sheets, comprising, in combination, a substantially horizontal support, a pulley at the discharging end of said support, a second pulley at a distance from said first pulley, a belt passing around said pulleys, a projection carried by said belt and arranged to shove said piles of sheets along said support, a pair of forwardly projecting, downwardly curved arms carried by said support, one at each side of said support and arranged to receive the sheets

from said belt, the distance between said arms being slightly less than the width of said sheets, a receiving box beneath said arms, and a rearwardly projecting tail carried by said projection and arranged to strike said sheets from above as said projection passes around the first mentioned pulley, whereby said sheets will be deposited in said box in regular order.

5. Mechanism for transporting and ejecting in an orderly manner piles of superposed flexible sheets, comprising, in combination, a substantially horizontal support, a pulley at the discharging end of said support, a second pulley at a distance from said first pulley, a belt passing around said pulleys, a projection carried by said belt and arranged to shove said piles of sheets along said support, a pair of forwardly projecting arms carried by said support, one at each side of said support and arranged to receive the sheets from said belt, the distance between said arms being slightly less than the width of said sheets, a receiving box beneath said arms, and a rearwardly projecting tail of flexible material carried by said projection and arranged to strike said sheets from above as said projection passes around the first mentioned pulley, whereby said sheets will be deposited in said box in regular order.

6. Mechanism for transporting and ejecting in an orderly manner piles of superposed flexible sheets, comprising, in combination, a substantially horizontal support, a pulley at the discharging end of said support, a second pulley at a distance from said first pulley, a belt passing around said pulleys, a projection carried by said belt and arranged to shove said piles of sheets along said support, a pair of forwardly projecting, downwardly curved arms carried by said support, one at each side of said support and arranged to receive the sheets from said belt, the distance between said arms being slightly less than the width of said sheets, the ends of said arms being inclined toward each other, a receiving box beneath said arms, and a rearwardly projecting tail carried by said projection and arranged to strike the rearward portion of said sheets from above as said projection passes around the first mentioned pulley, whereby said sheets will be deposited in said box in regular order.

In testimony whereof, I hereunto affix my signature in the presence of two witnesses.

DANIEL REISER.

Witnesses:
BRENNAN B. WEST,
HUGH B. MCGILL.