2 Sheets—Sheet 1.

G. S. RIX.

LATHES FOR TURNING WOOD.

No. 193,834. Patented Aug. 7, 1877.

Fig 1.

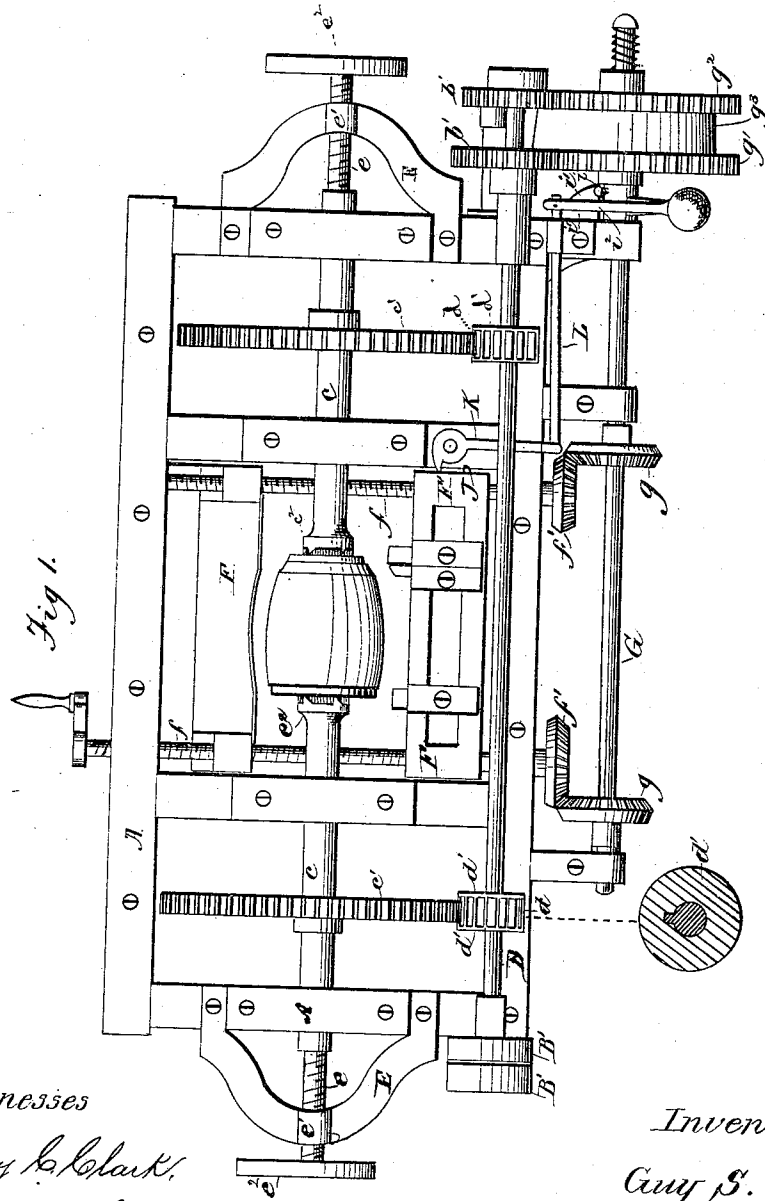

Witnesses

Harry G. Clark.

James J. Finley

Inventor

Guy S. Rix,

By H. W. Beadle & Co.

Attys.

N. PETERS, PHOTO-LITHOGRAPHER, WASHINGTON, D. C.

2 Sheets—Sheet 2.

G. S. RIX.

LATHES FOR TURNING WOOD.

No. 193,834 Patented Aug. 7, 1877.

Fig 2.

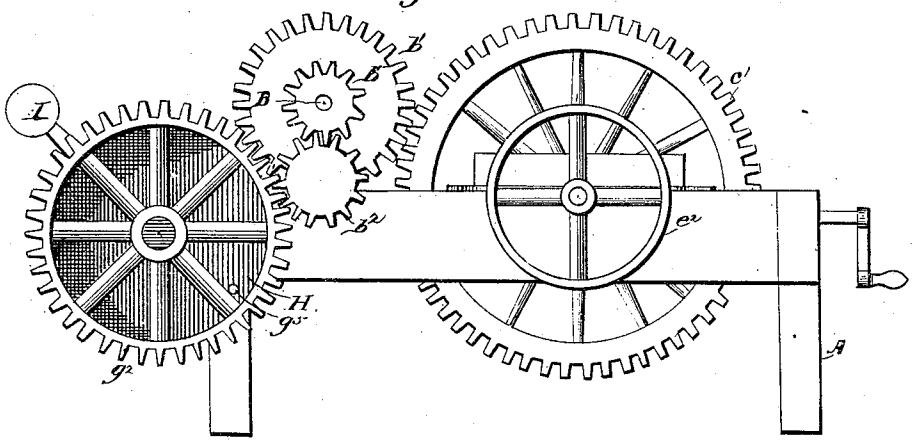

Fig 3.

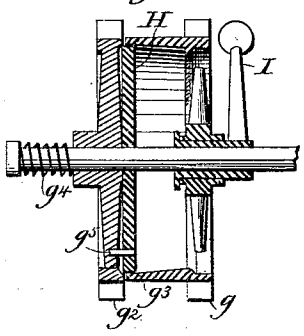

Fig 4.

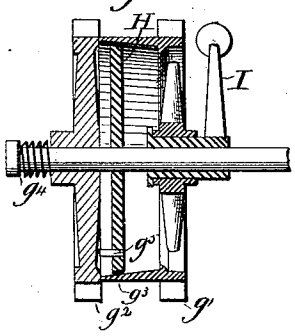

Fig 5.

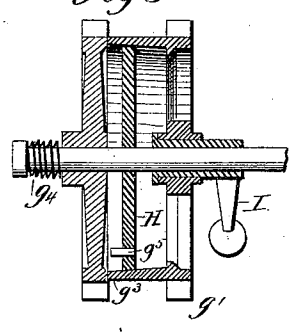

Fig 6.

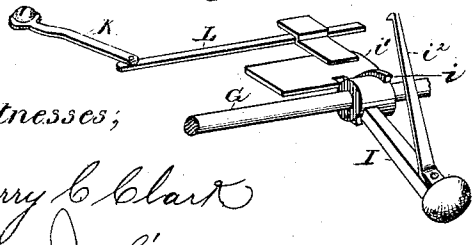

Witnesses;

Harry C Clark

James J. Finley

Inventor

Guy S. Rix.

By H. W. Beadle & Co.

Attys.

N. PETERS, PHOTO-LITHOGRAPHER, WASHINGTON, D. C.

UNITED STATES PATENT OFFICE.

GUY S. RIX, OF CONCORD, NEW HAMPSHIRE.

IMPROVEMENT IN LATHES FOR TURNING WOOD.

Specification forming part of Letters Patent No. **193,834**, dated August 7, 1877; application filed January 22, 1877.

To all whom it may concern:

Be it known that I, GUY S. RIX, of Concord, in the county of Merrimack and State of New Hampshire, have invented a new and useful Improvement in Lathes for Turning Wood; and I do hereby declare that the following is a full and exact description of the same, reference being had to the accompanying drawings and to the letters of reference marked thereon.

This invention consists, first, in the combination of certain parts by means of which the movements of the machine are reversed; and, second, in the combination of an automatic releasing mechanism with a weighted lever, all of which will be fully described hereinafter.

In the drawings, Figure 1 represents a plan view of my improved machine; Fig. 2, an end elevation; Figs. 3, 4, and 5, various views of the mechanism for giving movement to the cutters; and Fig. 6, a perspective view of the automatic mechanism for reversing the feed of the cutters.

To enable others skilled in the art to make and use my invention, I will now proceed to describe fully its construction and manner of operation.

A A represent the frame-work of the machine, which may be constructed generally in any proper manner and of any suitable size. B represents the main shaft, suitably supported in proper bearings upon the frame-work, and provided with pulleys B′ B′ for receiving power from any proper source.

For convenience of description, the mechanism for holding the hub and giving it a revolving movement will first be described.

c c represent suitable shafts properly supported in bearings in the frame-work, and adapted to move longitudinally therein, which are provided with gear-wheels c^1 rigidly attached thereto, as shown. The inner ends of these shafts are enlarged to form disks c^2 c^2, which are provided with knife or chisel edges arranged in radial lines adapted to be embedded in the ends of the hub, for the purpose of holding the same securely. *d d* represent pinions located upon the main shaft, and revolving therewith, but adapted to slide thereon in a longitudinal direction, which are provided with circular side plates *d′ d′*, projecting over the teeth of gear-wheels c^1, by means of which the two—that is, the wheel and pinion—are kept in proper contact during the longitudinal movements of the shafts *c*. *e e* represent screw-shafts, adapted to be turned in the sockets e^1 of the brackets E by means of the hand-wheels e^2. The inner ends of these shafts are adapted to press upon the outer ends of shafts *a c*, and give the necessary longitudinal movement to securely gripe the hub, which is placed between them, as shown.

From this description it will be understood that the shafts *c c* are moved longitudinally by the screws *e e*, for the purpose of holding the hub, and that they are given a revolving movement by means of pinions *d d* upon the main shaft, for the purpose of communicating the same to the hub.

The mechanism for operating the cutters will now be described. F F′ represent the cutter-carriages, supported by the double-threaded screw-shafts *f f*, passing through proper openings therein, the same being located upon each side of the longitudinal center line of the machine, as shown. The carriage-block F is adapted to carry a single cutter, corresponding in conformation with the outline of the hub, and the block F′, by means of slots, as shown, removable cutters of different form for cutting off the hub at the desired length and giving it the peculiar conformation required. *f′ f′* represent bevel-pinions upon the ends of the screw-shafts *f f*, which engage with the corresponding pinions *g g* upon the longitudinal shaft G. This shaft receives motion in one direction for the purpose of feeding forward the cutters, and in the opposite direction for the purpose of withdrawing them, the same being received from the main shaft by means of certain intermediate mechanism which will now be described.

b^1 b^1, Figs. 1 and 2, represent pinions of different diameters, rigidly fixed to one end of the main shaft, the first of which engages directly with the loose gear-wheel g^1 upon the shaft G, and the other, through the medium of an idle wheel, b^2, with the loose gear-wheel g^2, also upon shaft G. As motion is communicated from the main shaft directly to one of these wheels, and through an intermediate wheel to the other, it follows that one will revolve in one direction upon the shaft G and the other in the other direction, and as one of

the pinions, b^1, is larger in diameter than the other, it follows that the motion will be more rapid in one direction than the other.

H, Figs. 2, 3, 4, and 5, represents a disk, rigidly attached to shaft G, and located between the loose wheels g^1 g^2.

I, Fig. 6, represents a lever, the inner end of which is provided with a sleeve inclosing the shaft G, and provided with a spiral thread, i, adapted to turn in a proper groove or slot in the plate i^1, rigidly attached to the frame, as shown. This lever is connected by means of its sleeve to the hub of gear-wheel g^1, which latter is provided with the tapering circumferential band g^3, forming the female part of a cone friction-pulley.

By the downward movement of the lever the wheel g^1 is adjusted longitudinally upon the shaft, and caused to come in contact with the disk H, rigidly fixed to shaft G, and forming the male part of the friction-pulley, by means of which the movement of the wheel is communicated to shaft G, as shown in Fig. 5. The wheel g^2 is also capable of a longitudinal movement on the shaft G, and when the lever is depressed it is forced away from contact with the intermediate disk by the projecting edge of the band g^3. When the lever is raised, however, it is forced into contact with the disk by means of the coiled spring g^4, upon the shaft G, and its motion is communicated thereto by the engagement of one of its arms with the projecting stud g^5 upon the disk.

In order that the forward motion of the cutter may cease at the proper time, automatic means are employed to throw the feed mechanism out of gear, which will now be described. J represents a pin upon the cutter-carriage F′, and K a lever having its short arm adapted to be acted upon by the pin J when the carriage has reached that point in its movement when it is desired to stop the operation of cutting. The long arm of the lever K is pivoted to one end of a bar, L, adapted to slide in proper bearings on the frame, as shown. i^2 represents a catch-bar extending from lever I, the free end of which is adapted to engage with the end of sliding bar l, as shown.

From this description it will be understood that when the cutter-carriage F′ has progressed far enough in its movement the lever I will be released, and the wheel g^1, which gives shaft G its movement at this time, disconnected from disk H by the pressure of the edge of the circumferential band g^3 against its periphery, so that all forward movement must cease.

As it is desirable that the last shaving taken from the hub in finishing it should be much thinner than those which precede it, my machine is adapted to permit the workman to feed forward the cutters for the finishing-movement by hand, the operation being as follows: The hub having been brought to the proper size for finishing by the operation of the machine in the usual manner, the short end of lever K is reached by the pin J on the cutter-carriage, and the lever I being released, the feeding mechanism is disconnected from the main shaft. The weighted lever, however, is not permitted to fall the entire distance, as this would cause the feeding mechanism again to be connected to the main shaft by the reversing-gear; but the lever is so held that both wheels on the shaft G are held out of contact with the disk H, as shown in Fig. 4, when, by means of the hand-wheel, the feeding-shafts are revolved without affecting the other parts of the machine, so that the finishing-cut may be made according to the judgment of the workman.

From the foregoing description the operation will be readily understood. The block from which the hub is to be formed is placed between the shafts c c, and securely held by bringing together the shafts by the revolution of the hand-wheels. Motion being given to the machine, the cutter-carriages are fed forward continuously until the block is turned into the desired form. When this has been accomplished, the movement of the cutters may be reversed by the contact of the pin J upon the carriage with the lever K, by which means the lever I is permitted to fall and remove the operating-wheel g^1 from contact with the disk H, and bring the oppositely-revolving wheel g^2 into contact with it. This result is accomplished when it is desired to finish the hub entirely by the machine.

When it is desired to finish by hand, the lever I is permitted to fall about one-half of its distance, so that the shaft G is caused to remain stationary, when the hand-wheel may be operated, as before described.

Having found in practice that the smoothness of the cut does not depend upon the rapidity of the revolution, but upon the thickness of the shaving removed, I have adapted my machine, by means of the pinions and gear-wheels, to revolve the hub with a slow motion, while the cutting mechanism in shaping the hub removes a comparatively-thick shaving, the hub being finished finally by adjusting the cutters by hand to remove a thin shaving.

Having thus fully described my invention, what I claim as new, and desire to secure by Letters Patent, is—

1. The combination of the weighted lever I, having a spiral thread, the loose gear-wheels, and the intermediate disk H, as described.

2. The combination of the weighted lever and the releasing mechanism, consisting of the pin J, lever K, bar L, and catch i^2, as described.

This specification signed and witnessed this 9th day of September, 1874.

GUY S. RIX.

Witnesses:
CHAS. C. LUND,
WARREN UPHAM.