HU000032567T2

(19) **HU**

(11) Lajstromszám: **E 032 567**

(13) **T2**

MAGYARORSZÁG
Szellemi Tulajdon Nemzeti Hivatala

EURÓPAI SZABADALOM
SZÖVEGÉNEK FORDÍTÁSA

(21) Magyar ügyszám: **E 13 188796**
(22) A bejelentés napja: **2011. 04. 11.**

(51) Int. Cl.: ***H04N 19/70*** *(2006.01)*
H04N 19/91 *(2006.01)*

(96) Az európai bejelentés bejelentési száma:
EP 20110188796
(97) Az európai bejelentés közzétételi adatai:
EP 2693752 A1 **2014. 02. 05.**
(97) Az európai szabadalom megadásának meghirdetési adatai:
EP 2693752 B1 **2017. 03. 08.**

(30) Elsőbbségi adatok:

PCT/EP2010/054822	**2010. 04. 13.**	**WO**
10159766	**2010. 04. 13.**	**EP**

(72) Feltaláló(k):
Kirchhoffer, Heiner, 10555 Berlin (DE)
SCHWARZ, Heiko, 16341 Panketal (DE)
Nguyen, Tung, 13055 Berlin (DE)
MARPE, Detlev, 12161 Berlin (DE)
WIEGAND, Thomas, 14195 Berlin (DE)

(73) Jogosult(ak):
GE Video Compression, LLC, Albany, NY 12211 (US)

(74) Képviselő:
Danubia Szabadalmi és Jogi Iroda Kft., Budapest

(54) **Szignifikancia térképek és transzformációs együttható blokkok kódolása**

Az európai szabadalom ellen, megadásának az Európai Szabadalmi Közlönyben való meghirdetésétől számított kilenc hónapon belül, felszólalást lehet benyújtani az Európai Szabadalmi Hivatalnál. (Európai Szabadalmi Egyezmény 99. cikk(1))

A fordítást a szabadalmas az 1995. évi XXXIII. törvény 84/H. §-a szerint nyújtotta be. A fordítás tartalmi helyességét a Szellemi Tulajdon Nemzeti Hivatala nem vizsgálta.

(19) Europäisches Patentamt
European Patent Office
Office européen des brevets

(11) EP 2 693 752 B1

(12) **EUROPEAN PATENT SPECIFICATION**

(45) Date of publication and mention of the grant of the patent:
08.03.2017 Bulletin 2017/10

(21) Application number: **13188796.0**

(22) Date of filing: **11.04.2011**

(51) Int Cl.:
H04N 19/70 *(2014.01)* ***H04N 19/91*** *(2014.01)*

(54) **Coding of significance maps and transform coefficient blocks**

Codierung von Signifikanzmatrizen und Transformationskoeffizientenblöcken

Codage des cartes de signification et des blocs de coefficients de transformmation

(84) Designated Contracting States:
AL AT BE BG CH CY CZ DE DK EE ES FI FR GB GR HR HU IE IS IT LI LT LU LV MC MK MT NL NO PL PT RO RS SE SI SK SM TR

(30) Priority: **13.04.2010 PCT/EP2010/054822**
13.04.2010 EP 10159766

(43) Date of publication of application:
05.02.2014 Bulletin 2014/06

(62) Document number(s) of the earlier application(s) in accordance with Art. 76 EPC:
11713791.9 / 2 559 244

(73) Proprietor: **GE Video Compression, LLC**
Albany, NY 12211 (US)

(72) Inventors:
- **Kirchhoffer, Heiner**
10555 Berlin (DE)
- **Schwarz, Heiko**
16341 Panketal (DE)
- **Nguyen, Tung**
13055 Berlin (DE)
- **Marpe, Detlev**
12161 Berlin (DE)
- **Wiegand, Thomas**
14195 Berlin (DE)

(74) Representative: **Schenk, Markus et al**
Schoppe, Zimmermann, Stöckeler
Zinkler, Schenk & Partner mbB
Patentanwälte
Radlkoferstrasse 2
81373 München (DE)

(56) References cited:
EP-A1- 1 768 415 **EP-A2- 1 487 113**
GB-A- 2 264 605 **US-A1- 2003 128 753**

- **BELL T ET AL: "Compression of Sparse Matrices by Arithmetic Coding", PROCEEDINGS OF THE DATA COMPRESSION CONFERENCE (DCC '98), 30 March 1998 (1998-03-30), pages 23-32, XP010276609, IEEE, Los Alamitos, CA, US DOI: 10.1109/DCC.1998.672126 ISBN: 978-0-8186-8406-7**
- **SALOMON D et al: "Data Compression: The Complete Reference (passage)", 1998, Springer, New York, NY, US, XP002270343, ISBN: 978-0-387-98280-9 pages 69-84, * section 2.15 Adaptive Arithmetic Coding * * tables 2.44-2.46 ***
- **ZHANG L ET AL: "Context-based Arithmetic Coding Reexamined for DCT Video Compression", PROCEEDINGS OF THE 2007 IEEE INTERNATIONAL SYMPOSIUM ON CIRCUITS AND SYSTEMS (ICASP 2007), May 2007 (2007-05), pages 3147-3150, XP031181972, IEEE, Piscataway, NJ, US ISBN: 978-1-4244-0920-4**
- **PENNEBAKER W B ET AL: "An overview of the basic principles of the Q-Coder adaptive binary arithmetic coder", IBM JOURNAL OF RESEARCH AND DEVELOPMENT, vol. 32, no. 6, November 1988 (1988-11), pages 717-726, XP000111384, IBM Corporation, New York, NY, US ISSN: 0018-8646**

Note: Within nine months of the publication of the mention of the grant of the European patent in the European Patent Bulletin, any person may give notice to the European Patent Office of opposition to that patent, in accordance with the Implementing Regulations. Notice of opposition shall not be deemed to have been filed until the opposition fee has been paid. (Art. 99(1) European Patent Convention).

Printed by Jouve, 75001 PARIS (FR)

(Cont. next page)

- BRADY N ET AL: "Context-based Arithmetic Encoding of 2D Shape Sequences", PROCEEDINGS OF THE IEEE INTERNATIONAL CONFERENCE ON IMAGE PROCESSING (ICIP 1997), vol. 1, 26 October 1997 (1997-10-26), pages 29-32, XP010254100, IEEE, Los Alamitos, CA, US DOI: 10.1109/ICIP.1997.647376 ISBN: 978-0-8186-8183-7
- MARPE D ET AL: "Context-based adaptive binary arithmetic coding in JVT/H.26L", PROCEEDINGS OF THE IEEE INTERNATIONAL CONFERENCE ON IMAGE PROCESSING (ICIP 2002), vol. 2, 22 September 2002 (2002-09-22), pages 513-516, XP010608021, IEEE, Los Alamitos, CA, US ISBN: 978-0-7803-7622-9

Description

[0001] The present application is directed to coding of significance maps indicating positions of significant transform coefficients within transform coefficient blocks and the coding of such transform coefficient blocks. Such coding may, for example, be used in picture and video coding, for example.

[0002] In conventional video coding, the pictures of a video sequence are usually decomposed into blocks. The blocks or the colour components of the blocks are predicted by either motion-compensated prediction or intra prediction. The blocks can have different sizes and can be either quadratic or rectangular. All samples of a block or a colour component of a block are predicted using the same set of prediction parameters, such as reference indices (indentifying a reference picture in the already coded set of pictures), motion parameters (specifying a measure for the movement of a blocks between a reference picture and the current picture), parameters for specifying the interpolation filter, intra prediction modes, etc. The motion parameters can be represented by displacement vectors with a horizontal and vertical component or by higher order motion parameters such as affine motion parameters consisting of 6 components. It is also possible that more than one set of prediction parameters (such as reference indices and motion parameters) are associated with a single block. In that case, for each set of prediction parameters, a single intermediate prediction signal for the block or the colour component of a block is generated, and the final prediction signal is build by a weighted sum of the intermediate prediction signals. The weighting parameters and potentially also a constant offset (which is added to the weighted sum) can either be fixed for a picture, or a reference picture, or a set of reference pictures, or they can be included in the set of prediction parameters for the corresponding block. Similarly, still images are also often decomposed into blocks, and the blocks are predicted by an intra prediction method (which can be a spatial intra prediction method or a simple intra prediction method that predicts the DC component of the block). In a corner case, the prediction signal can also be zero.

[0003] The difference between the original blocks or the colour components of the original blocks and the corresponding prediction signals, also referred to as the residual signal, is usually transformed and quantized. A two-dimensional transform is applied to the residual signal and the resulting transform coefficients are quantized. For this transform coding, the blocks or the colour components of the blocks, for which a particular set of prediction parameters has been used, can be further split before applying the transform. The transform blocks can be equal to or smaller than the blocks that are used for prediction. It is also possible that a transform block includes more than one of the blocks that are used for prediction. Different transform blocks in a still image or a picture of a video sequence can have different sizes and the transform blocks can represent quadratic or rectangular blocks.

[0004] The resulting quantized transform coefficients, also referred to as transform coefficient levels, are then transmitted using entropy coding techniques. Therefore, a block of transform coefficients levels is usually mapped onto a vector (i.e., an ordered set) of transform coefficient values using a scan, where different scans can be used for different blocks. Often a zig-zag scan is used. For blocks that contain only samples of one field of an interlaced frame (these blocks can be blocks in coded fields or field blocks in coded frames), it is also common to use a different scan specifically designed for field blocks. A commonly used entropy coding algorithm for encoding the resulting ordered sequence of transform coefficients is run-level coding. Usually, a large number of the transform coefficient levels is zero, and a set of successive transform coefficient levels that are equal to zero can be efficiently represented by coding the number of successive transform coefficient levels that are equal to zero (the run). For the remaining (non-zero) transform coefficients, the actual level is coded. There are various alternatives of run-level codes. The run before a non-zero coefficient and the level of the non-zero transform coefficient can be coded together using a single symbol or codeword. Often, special symbols for the end-of-block, which is sent after the last non-zero transform coefficient, are included. Or it is possible to first encode the number of non-zero transform coefficient levels, and depending on this number, the levels and runs are coded.

[0005] A somewhat different approach is used in the highly efficient CABAC entropy coding in H.264. Here, the coding of transform coefficient levels is split into three steps. In the first step, a binary syntax element coded_block_flag is transmitted for each transform block, which signals whether the transform block contains significant transform coefficient levels (i.e., transform coefficients that are non-zero). If this syntax element indicates that significant transform coefficient levels are present, a binary-valued significance map is coded, which specifies which of the transform coefficient levels have non-zero values. And then, in a reverse scan order, the values of the non-zero transform coefficient levels are coded. The significance map is coded as follows. For each coefficient in the scan order, a binary syntax element significant_coeff_flag is coded, which specifies whether the corresponding transform coefficient level is not equal to zero. If the significant_coeff_flag bin is equal to one, i.e., if a non-zero transform coefficient level exists at this scanning position, a further binary syntax element last_significant_coeff_flag is coded. This bin indicates if the current significant transform coefficient level is the last significant transform coefficient level inside the block or if further significant transform coefficient levels follow in scanning order. If last_significant_coeff_flag indicates that no further significant transform coefficients follow, no further syntax elements are coded for specifying the significance map for the block. In the next step, the values of the significant transform coefficient levels are coded, whose locations inside the block are already

determined by the significance map. The values of significant transform coefficient levels are coded in reverse scanning order by using the following three syntax elements. The binary syntax element coeff_abs_greater_one indicates if the absolute value of the significant transform coefficient level is greater than one. If the binary syntax element coeff_abs_greater_one indicates that the absolute value is greater than one, a further syntax element coeff_abs_level_minus_one is sent, which specifies the absolute value of the transform coefficient level minus one. Finally, the binary syntax element coeff_sign_flag, which specifies the sign of the transform coefficient value, is coded for each significant transform coefficient level. It should be noted again that the syntax elements that are related to the significance map are coded in scanning order, whereas the syntax elements that are related to the actual values of the transform coefficients levels are coded in reverse scanning order allowing the usage of more suitable context models.

[0006] In the CABAC entropy coding in H.264, all syntax elements for the transform coefficient levels are coded using a binary probability modelling. The non-binary syntax element coeff_abs_level_minus_one is first binarized, i.e., it is mapped onto a sequence of binary decisions (bins), and these bins are sequentially coded. The binary syntax elements significant_coeff_flag, last_significant_coeff_flag, coeff_abs_greater_one, and coeff_sign_flag are directly coded. Each coded bin (including the binary syntax elements) is associated with a context. A context represents a probability model for a class of coded bins. A measure related to the probability for one of the two possible bin values is estimated for each context based on the values of the bins that have been already coded with the corresponding context. For several bins related to the transform coding, the context that is used for coding is selected based on already transmitted syntax elements or based on the position inside a block.

[0007] The significance map specifies information about the significance (transform coefficient level is different from zero) for the scan positions. In the CABAC entropy coding of H.264, for a block size of 4x4, a separate context is used for each scan position for coding the binary syntax elements significant_coeff_flag and the last_significant_coeff_flag, where different contexts are used for the significant_coeff_flag and the last_significant_coeff_flag of a scan position. For 8x8 blocks, the same context model is used for four successive scan positions, resulting in 16 context models for the significant_coeff_flag and additional 16 context models for the last_significant_coeff_flag. This method of context modelling for the significant_coeff_flag and the last_significant_coeff_flag has some disadvantages for large block sizes. On the one hand side, if each scan position is associated with a separate context model, the number of context models does significantly increase when blocks greater than 8x8 are coded. Such an increased number of context models results in a slow adaptation of the probability estimates and usually an inaccuracy of the probability estimates, where both aspects have a negative impact on the coding efficiency. On the other hand, the assignment of a context model to a number of successive scan positions (as done for 8x8 blocks in H.264) is also not optimal for larger block sizes, since the non-zero transform coefficients are usually concentrated in particular regions of a transform block (the regions are dependent on the main structures inside the corresponding blocks of the residual signal).

[0008] After coding the significance map, the block is processed in reverse scan order. If a scan position is significant, i.e., the coefficient is different from zero, the binary syntax element coeff_abs_greater_one is transmitted. Initially, the second context model of the corresponding context model set is selected for the coeff_abs_greater_one syntax element. If the coded value of any coeff_abs_greater_one syntax element inside the block is equal to one (i.e., the absolute coefficient is greater than 2), the context modelling switches back to the first context model of the set and uses this context model up to the end of the block. Otherwise (all coded values of coeff_abs_greater_one inside the block are zero and the corresponding absolute coefficient levels are equal to one), the context model is chosen depending on the number of the coeff_abs_greater_one syntax elements equal to zero that have already been coded/decoded in the reverse scan of the considered block. The context model selection for the syntax element coeff_abs_greater_one can be summarized by the following equation, where the current context model index C_{t+1} is selected based on the previous context model index C_t and the value of the previously coded syntax element coeff_abs_greater_one, which is represented by bin_t in the equation. For the first syntax element coeff_abs_greater_one inside a block, the context model index is set equal to $C_t = 1$.

$$C_{t+1}(C_t, bin_t) = \begin{cases} 0, & \text{for } bin_t = 1 \\ \min(C_t + 1, 4) & \text{for } bin_t = 0 \end{cases}$$

[0009] The second syntax element for coding the absolute transform coefficient levels, coeff_abs_level_minus_one is only coded, when the coeff_abs_greater_one syntax element for the same scan position is equal to one. The non-binary syntax element coeff_abs_level_minus_one is binarized into a sequence of bins and for the first bin of this binarization; a context model index is selected as described in the following. The remaining bins of the binarization are coded with fixed contexts. The context for the first bin of the binarization is selected as follows. For the first coeff_abs_level_minus_one syntax element, the first context model of the set of context models for the first bin of the coeff_abs_level_minus_one syntax element is selected, the corresponding context model index is set equal to $C_t = 0$. For each further first bin of the coeff_abs_level_minus_one syntax element, the context modelling switches to the next

context model in the set, where the number of context models in set is limited to 5. The context model selection can be expressed by the following formula, where the current context model index C_{t+1} is selected based on the previous context model index C_t. As mentioned above, for the first syntax element coeff_abs_level_minus_one inside a block, the context model index is set equal to $C_t = 0$. Note, that different sets of context models are used for the syntax elements coeff_abs_greater_one and coeff_abs_level_minus_one.

$$C_{t+1}(C_t) = \min(C_t + 1, 4)$$

[0010] For large blocks, this method has some disadvantages. The selection of the first context model for coeff_abs_greater_one (which is used if a value of coeff_abs_greater_one equal to 1 has been coded for the blocks) is usually done too early and the last context model for coeff_abs_level_minus_one is reached too fast because the number of significant coefficients is larger than in small blocks. So, most bins of coeff_abs_greater_one and coeff_abs_level_minus_one are coded with a single context model. But these bins usually have different probabilities, and hence the usage of a single context model for a large number of bins has a negative impact on the coding efficiency.

[0011] Although, in general, large blocks increase the computational overhead for performing the spectral decomposing transform, the ability to effectively code both small and large blocks would enable the achievement of better coding efficiency in coding sample arrays such as pictures or sample arrays representing other spatially sampled information signals such as depth maps or the like. The reason for this is the dependency between spatial and spectral resolution when transforming a sample array within blocks: the larger the blocks the higher the spectral resolution of the transform is. Generally, it would be favorable to be able to locally apply the individual transform on a sample array such that within the area of such an individual transform, the spectral composition of the sample array does not vary to a great extent. To small blocks guarantee that the content within the blocks is relatively consistent. On the other hand, if the blocks are too small, the spectral resolution is low, and the ratio between non-significant and significant transform coefficients gets lower.

[0012] Thus, it would be favorable to have a coding scheme which enables an efficient coding for transform coefficient blocks, even when they are large, and their significance maps.

[0013] Reference EP1487113A2 describes how a first one-bit symbol (CBP4) is transmitted for each block of transformation coefficients. If the CBP4 shows that a corresponding block contains significant coefficients, a significance image is encoded as a result of the transmission of a one-bit symbol (SIG) for each coefficient in a scan sequence. - If a corresponding significance symbol is 'one', then a further one-bit symbol (LAST) is transmitted to show whether a present significant coefficient is a last coefficient within a block or whether further significant coefficients are following. Positions of significant transformation coefficients contained in a block are determined and encoded for each block in a first scanning process, followed by a second scanning process carried out in reverse order.

[0014] Reference EP1768415A1 describes encoding and decoding of video data with improved coding efficiency. After transforming pixel data into the frequency domain, only a predetermined subset of transform coefficients is scanned and encoded. In this way, prior knowledge about the location of regular-zero transform coefficients can be exploited so as to reduce redundancies in the coded video data. Information about the location of regular-zero coefficients can be signaled either explicitly or implicitly to the decoder. The decoder decodes the subset of transform coefficients, employs the signaled information about the location of regular-zero coefficients to inverse scan the decoded transform coefficients, and inverse transforms the transform coefficients back into a block of pixels.

[0015] Reference US2003/128753A1 discloses an optimal scanning method for coding/decoding an image signal is provided. In a method of coding an image signal through a discrete cosine transform, at least one is selected among a plurality of reference blocks. A scanning order in which to scan blocks to be coded of the reference blocks is generated and the blocks to be coded are scanned in the order of the generated scanning order. The at least one selected reference block is temporally or spatially adjacent to the block to be coded. When the blocks to be coded are scanned, probabilities that non-zero coefficients occur are obtained from the at least one selected reference block, and the scanning order is determined in descending order starting from the highest probability. Here, the scanning order is generated to be a zigzag scanning order if the probabilities are identical The optimal scanning method increases signal compression efficiency.

[0016] Reference GB2264605A describes how a multi-scanner scans a signal according to a plurality of different patterns and a scanning pattern selector determines which scanning pattern produces the most efficient coding result, for example for runlength coding. The selected signal is multiplexed with a signal which identifies the selected scanning pattern. preferably after variable length encoding. As described, the signal is an image signal which has undergone discrete cosine transformation after media compensation. Eight different scanning or sampling patterns are disclosed.

[0017] The article "Compression of Sparse Matrices by Arithmetic Coding" by Bell T. et al., PROCEEDINGS OF THE DATA COMPRESSION CONFERENCE (DCC '98), 30 March 1998, pages 23-32, XP010276609, IEEE, Los Alamitos,

CA, US, DOI: 10.1109/DCC.1998.672126, ISBN: 978-0-8186-8406-7, describes the compression of matrices where the majority of the entries are a fixed constant (most typically zero), usually referred to as sparse matrices. The performance of existing methods is evaluated, and it is considered how arithmetic coding can be applied to the problem to achieve better compression.

[0018] The article "Data Compression: The Complete Reference (passage)" by Salomon D. et al., 1998, Springer, New York, NY, US, XP002270343, ISBN: 978-0-387-98280-9, pages 69-84, describes various aspects of arithmetic coding.

[0019] The article "Context-based Arithmetic Coding Reexamined for DCT Video Compression" by Zhang L. et al., PROCEEDINGS OF THE 2007 IEEE INTERNATIONAL SYMPOSIUM ON CIRCUITS AND SYSTEMS (ICASP 2007), 1 May 2007, pages 3147-3150, XP031181972, IEEE, Piscataway, NJ, US, ISBN: 978-1-4244-0920-4, presents a new context modeling technique for arithmetic coding of DCT coefficients in video compression. A key feature of the new technique is the inclusion of all previously coded coefficient magnitudes in a DCT block in context modeling. This enables adaptive arithmetic coding to exploit the redundancy of the high-order Markov process in the DCT domain with a few conditioning states. In addition, a context weighting technique is used to further improve the coding efficiency. The complexity of the new arithmetic coding scheme is slightly lower than that of Context-based Adaptive Binary Arithmetic Coding (CABAC) of H.264.

[0020] The article "An overview of the basic principles of the Q-Coder adaptive binary arithmetic coder" by Pennebaker W. B. et al., IBM JOURNAL OF RESEARCH AND DEVELOPMENT, Vol. 32, No. 6, November 1988, pages 717-726, XP000111384, IBM Corporation, New York, NY, US, ISSN: 0018-8646, presents the Q-Coder as a new form of adaptive binary arithmetic coding. The binary arithmetic coding part of the technique is derived from the basic concepts introduced by Rissanen, Pasco, and Langdon, but extends the coding conventions to resolve a conflict between optimal software and hardware implementations. In addition, a robust form of probability estimation is used in which the probability estimate is derived solely from the interval renormalizations that are part of the arithmetic coding process. A brief tutorial of arithmetic coding concepts is presented, followed by a discussion of the compatible optimal hardware and software coding structures and the estimation of symbol probabilities from interval renormalization.

[0021] The article "Context-based Artithmetic Encoding of 2D Shape Sequences" by Brady N. et al., PROCEEDINGS OF THE IEEE INTERNATIONAL CONFERENCE ON IMAGE PROCESSING (ICIP 1997), Vol. 1, 26 October 1997, pages 29-32, XP010254100, IEEE, Los Alamitos, CA, US, DOI: 10.1109/ICIP.1997.647376, ISBN: 978-0-8186-8183-7, describes a new method for shape coding in object-based video sequences. Context-based arithmetic encoding, as used in JBIG, is utilized within a block-based framework and further extended in order to make efficient use of temporal prediction.

[0022] The article "Context-based adaptive binary arithmetic coding in JVT/H.26L" by Marpe D. et al., PROCEEDINGS OF THE IEEE INTERNATIONAL CONFERENCE ON IMAGE PROCESSING (ICIP 2002), Vol. 2, 22 September 2002, pages 513-516, XP010608021, IEEE, Los Alamitos, CA, US, ISBN: 978-0-7803-7622-9, describes CONTEXT-BASED ADAPTIVE BINARY ARITHMETIC CODING IN JVT/H.26L, presents a new adaptive entropy coding scheme for video compression. It utilizes an adaptive arithmetic coding technique to better match the first order entropy of the coded symbols and to keep track of non-statutory symbol statistics. In addition, remaining symbol redundancies will be exploited by context modeling to further reduce the bit-rate. A novel approach for coding of transform coefficients and a table look-up method for probability estimation and arithmetic coding is presented. This new approach has been integrated in the current JVT test model (JM) to demonstrate the performance gain, and it was adopted as a part of the current JVT/H.26L draft.

[0023] Thus, the object of the present invention is to provide a coding scheme for coding transform coefficient blocks , so that the coding efficiency is increased.

[0024] This object is achieved by the subject matter of the independent claims.

[0025] In accordance with an aspect aspect of the present application, the application is based on the finding that the coding efficiency for coding a transform coefficient block may be increased when a significance map indicating positions of the significant transform coefficients within the transform coefficient block precedes the coding of the actual values of the significant transform coefficients within the transform coefficient block and if the predetermined scan order among the positions of the transform coefficient block used to sequentially associate the sequence of values of the significant transform coefficients with the positions of the significant transform coefficients scans the transform coefficient block in sub-blocks using a sub-block scan order among the sub-blocks with, subsidiary, scanning the positions of the transform coefficients within the sub-blocks in a coefficients scan order, and if a selected set of a number of contexts from a plurality of sets of a number of context is used for sequentially context-adaptively entropy decoding the values of the significant transform coefficient values, the selection of the selected set depending on the values of the transform coefficients within a sub-block of the transform coefficient block already having been traversed in the sub-block scan order or the selection depending on the values of the transform coefficients of a co-located sub-block in a previously decoded transform coefficient block. This way the context adaptation is very well suited to the above-outlined property of significant transform coefficients being clustered at certain areas within a transform coefficient block, especially when large transform coef-

ficient blocks are considered. In other words, the values may be scanned in subblocks, and contexts selected based on subblock statistics.

[0026] In accordance with a further aspect of the present application, an underlying idea of the present application is that a higher coding efficiency for coding a significance map indicating positions of significant transform coefficients within a transform coefficient block may be achieved if the scan order by which the sequentially extracted syntax elements indicating, for associated positions within the transform coefficient block, as to whether at the respective position a significant or insignificant transform coefficient is situated, are sequentially associated to the positions of the transform coefficient block, among the positions of the transform coefficient block depends on the positions of the significant transform coefficients indicated by previously associated syntax elements. In particular, the inventors found out that in typical sample array content such as picture, video or depth map content, the significant transform coefficients mostly form clusters at a certain side of the transform coefficient block corresponding to either non-zero frequencies in the vertical and low frequencies in the horizontal direction or vice versa so that taking into account the positions of significant transform coefficients indicated by previously associated syntax elements enables to control the further cause of the scan such that the probability of reaching the last significant transform coefficient within the transform coefficient block earlier is increased relative to a procedure according to which the scan order is predetermined independent from the positions of the significant transform coefficients indicated by previously associated syntax elements so far. This is particularly true for larger blocks, although the just said is also true for small blocks.

[0027] In accordance with an embodiment of the present application, the entropy decoder is configured to extract from the data stream information enabling to recognize as to whether a significant transform coefficient currently indicated by a currently associated syntax element is the last significant transform coefficient independent from its exact position within the transform coefficient block wherein the entropy decoder is configured to expect no further syntax element in case of the current syntax element relating to such last significant transform coefficient. This information may comprise the number of significant transform coefficients with the block. Alternatively, second syntax elements are interleaved with the first syntax elements, the second syntax elements indicating, for associated positions at which a significant transform coefficient is situated, as to whether same is the last transform coefficient in the transform coefficient block or not.

[0028] In accordance with an embodiment, the associator adapts the scan order depending on the positions of the significant transform coefficients indicated so far merely at predefined positions within the transform coefficient block. For example, several sub-paths which traverse mutually disjointed sub-sets of positions within the transform coefficient block extend substantially diagonally from one pair of sides of the transform coefficient block corresponding to minimum frequency along a first direction and highest frequency along the other direction, respectively, to an opposite pair of sides of the transform coefficient block corresponding to zero frequency along the second direction and maximum frequency along the first direction, respectively. In this case the associator is configured to select the scan order such that the sub-paths are traversed in an order among the sub-paths where the distance of the sub-paths to the DC position within the transform coefficient block monotonically increases, each sub-path is traversed without interrupt along run direction, and for each sub-path the direction along which the sub-path is traversed is selected by the associator depending on the positions of the significant transform coefficients having been traversed during the previous sub-paths. By this measure, the probability is increased that the last sub-path, where the last significant transform coefficient is situated, is traversed in a direction so that it is more probable that the last significant transform coefficient lies within the first half of this last sub-path than within the second half thereof, thereby enabling to reduce the number of syntax elements indicating as to whether at a respective position a significant or insignificant transform coefficient is situated. The effect is especially valuable in case of large transform coefficient blocks.

[0029] According to a further aspect of the present application, the present application is based on the finding that a significance map indicating positions of significant transform coefficients within a transform coefficient block may be coded more efficiently if the afore-mentioned syntax elements indicating, for associated positions within the transform coefficient block as to whether at the respective position a significant or insignificant transform coefficient is situated, are context-adaptively entropy decoded using contexts which are individually selected for each of the syntax elements dependent on a number of significant transform coefficients in a neighborhood of the respective syntax element, indicated as being significant by any of the preceding syntax element. In particular, the inventors found out that with increasing size of the transform coefficient blocks, the significant transform coefficients are somehow clustered at certain areas within the transform coefficient block so that a context adaptation which is not only sensitive to the number of significant transform coefficients having been traversed in the predetermined scan orders so far but also takes into account the neighborhood of the significant transform coefficients results in a better adaptation of the context and therefore increases the coding efficiency of the entropy coding.

[0030] Of course, the above-outlined aspects may be combined in a favorable way.

[0031] Preferred embodiments of the present application are described in the following with respect to the Figures among which

Fig.1 shows a block diagram of an encoder according to an embodiment;

Fig. 2a-c schematically show different sub-divisions of a sample array such as a picture into blocks.

Fig. 3 shows a block diagram of a decoder according to an embodiment.

Fig. 4 shows a block diagram of an encoder according to an embodiment of the present application in more detail;

Fig. 5 shows a block diagram of a decoder according to an embodiment of the present application in more detail;

Fig. 6 schematically illustrates a transform of a block from spatial domain into spectral domain;

Fig. 7 shows a block diagram of an apparatus for decoding the significance map and the significant transform coefficients of a transform coefficient block in accordance with an embodiment.

Fig. 8 schematically illustrates a sub-partitioning of a scan order into subpathes and their different traversal directions;

Fig. 9 schematically illustrates neighborhood definitions for certain scan positions within a transform block in accordance with an embodiment;

Fig. 10 schematically illustrates possible neighborhood definitions for some scan positions within transform blocks lying at the border of a transform block;

Fig. 11 shows a possible scan of transform blocks in accordance with an embodiment of the present application.

[0032] It is noted that during the description of the figures, elements occurring in several of these Figures are indicated with the same reference sign in each of these Figures and a repeated description of these elements as far as the functionality is concerned is avoided in order to avoid unnecessary repititions. Nevertheless, the functionalities and descriptions provided with respect to one figure shall also apply to other Figures unless the opposite is explicitly indicated.

[0033] Fig. 1 shows an example for an encoder 10 in which aspects of the present application may be implemented. The encoder encodes an array of information samples 20 into a data stream. The array of information samples may represent any kind of spatially sampled information signal. For example, the sample array 20 may be a still picture or a picture of a video. Accordingly, the information samples may correspond to brightness values, color values, luma values, chroma values or the like. However, the information samples may also be depth values in case of the sample array 20 being a depth map generated by, for example, a time of light sensor or the like.

[0034] The encoder 10 is a block-based encoder. That is, encoder 10 encodes the sample array 20 into the data stream 30 in units of blocks 40. The encoding in units of blocks 40 does not necessarily mean that encoder 10 encodes these blocks 40 totally independent from each other. Rather, encoder 10 may use reconstructions of previously encoded blocks in order to extrapolate or intra-predict remaining blocks, and may use the granularity of the blocks for setting coding parameters, i.e. for setting the way each sample array region corresponding to a respective block is coded.

[0035] Further, encoder 10 is a transform coder. That its, encoder 10 encodes blocks 40 by using a transform in order to transfer the information samples within each block 40 from spatial domain into spectral domain. A two-dimensional transform such as a DCT of FFT or the like may be used. Preferably, the blocks 40 are of quadratic shape or rectangular shape.

[0036] The sub-division of the sample array 20 into blocks 40 shown in Fig. 1 merely serves for illustration purposes. Fig. 1 shows the sample array 20 as being sub-divided into a regular two-dimensional arrangement of quadratic or rectangular blocks 40 which abut to each other in a non-overlapping manner. The size of the blocks 40 may be predetermined. That is, encoder 10 may not transfer an information on the block size of blocks 40 within the data stream 30 to the decoding side. For example, the decoder may expect the predetermined block size.

[0037] However, several alternatives are possible. For example, the blocks may overlap each other. The overlapping may, however, be restricted to such an extent that each block has a portion not overlapped by any neighboring block, or such that each sample of the blocks is overlapped by, at the maximum, one block among the neighboring blocks arranged in juxtaposition to the current block along a predetermined direction. That latter would mean that the left and right hand neighbor blocks may overlap the current block so as to fully cover the current block but they may not overlay each other, and the same applies for the neighbors in vertical and diagonal direction.

[0038] As a further alternative, the sub-division of sample array 20 into blocks 40 may be adapted to the content of the sample array 20 by the encoder 10 with the sub-division information on the sub-division used being transferred to the decoder side via bitstream 30.

[0039] Figures 2a to 2c show different examples for a sub-division of a sample array 20 into blocks 40. Fig. 2a shows

a quadtree-based sub-division of a sample array 20 into blocks 40 of different sizes, with representative blocks being indicated at 40a, 40b, 40c and 40d with increasing size. In accordance with the sub-division of Fig. 2a, the sample array 20 is firstly divided into a regular two-dimensional arrangement of tree blocks 40d which, in turn, have individual sub-division information associated therewith according to which a certain tree block 40d may be further sub-divided according to a quadtree structure or not. The tree block to the left of block 40d is exemplarily sub-divided into smaller blocks in accordance with a quadtree structure. The encoder 10 may perform one two-dimensional transform for each of the blocks shown with solid and dashed lines in Fig. 2a. In other words, encoder 10 may transform the array 20 in units of the block subdivision.

[0040] Instead of a quadtree-based sub-division a more general multi tree-based sub-division may be used and the number of child nodes per hierarchy level may differ between different hierarchy levels.

[0041] Fig. 2b shows another example for a sub-division. In accordance with Fig. 2b, the sample array 20 is firstly divided into macroblocks 40b arranged in a regular two-dimensional arrangement in a non-overlapping mutually abutting manner wherein each macroblock 40b has associated therewith sub-division information according to which a macroblock is not sub-divided, or , if subdivided, sub-divided in a regular two-dimensional manner into equally-sized sub-blocks so as to achieve different sub-division granularities for different macroblocks. The result is a sub-division of the sample array 20 in differently-sized blocks 40 with representatives of the different sizes being indicated at 40a, 40b and 40a'. As in Fig. 2a, the encoder 10 performs a two-dimensional transform on each of the blocks shown in Fig. 2b with the solid and dashed lines. Fig. 2c will be discussed later.

[0042] Fig. 3 shows a decoder 50 being able to decode the data stream 30 generated by encoder 10 to reconstruct a reconstructed version 60 of the sample array 20. Decoder 50 extracts from the data stream 30 the transform coefficient block for each of the blocks 40 and reconstructs the reconstructed version 60 by performing an inverse transform on each of the transform coefficient blocks.

[0043] Encoder 10 and decoder 50 may be configured to perform entropy encoding/decoding in order to insert the information on the transform coefficient blocks into, and extract this information from the data stream, respectively. Details in this regard are described later. It should be noted that the data stream 30 not necessarily comprises information on transform coefficient blocks for all the blocks 40 of the sample array 20. Rather, as sub-set of blocks 40 may be coded into the bitstream 30 in another way. For example, encoder 10 may decide to refrain from inserting a transform coefficient block for a certain block of blocks 40 with inserting into the bitstream 30 alternative coding parameters instead which enable the decoder 50 to predict or otherwise fill the respective block in the reconstructed version 60. For example, encoder 10 may perform a texture analysis in order to locate blocks within sample array 20 which may be filled at the decoder side by decoder by way of texture synthesis and indicate this within the bitstream accordingly.

[0044] As discussed in the following Figures, the transform coefficient blocks not necessarily represent a spectral domain representation of the original information samples of a respective block 40 of the sample array 20. Rather, such a transform coefficient block may represent a spectral domain representation of a prediction residual of the respective block 40. Fig. 4 shows an embodiment for such an encoder. The encoder of Fig. 4 comprises a transform stage 100, an entropy coder 102, an inverse transform stage 104, a predictor 106 and a subtractor 108 as well as an adder 110. Subtractor 108, transform stage 100 and entropy coder 102 are serially connected in the order mentioned between an input 112 and an output 114 of the encoder of Fig. 4. The inverse transform stage 104, adder 110 and predictor 106 are connected in the order mentioned between the output of transform stage 100 and the inverting input of subtractor 108, with the output of predictor 106 also being connected to a further input of adder 110.

[0045] The coder of Fig. 4 is a predictive transform-based block coder. That is, the blocks of a sample array 20 entering input 112 are predicted from previously encoded and reconstructed portions of the same sample array 20 or previously coded and reconstructed other sample arrays which may precede or succeed the current sample array 20 in time. The prediction is performed by predictor 106. Subtractor 108 subtracts the prediction from such a original block and the transform stage 100 performs a two-dimensional transformation on the prediction residuals. The two-dimensional transformation itself or a subsequent measure inside transform stage 100 may lead to a quantization of the transformation coefficients within the transform coefficient blocks. The quantized transform coefficient blocks are losslessly coded by, for example, entropy encoding within entropy encoder 102 with the resulting data stream being output at output 114. The inverse transform stage 104 reconstructs the quantized residual and adder 110, in turn, combines the reconstructed residual with the corresponding prediction in order to obtain reconstructed information samples based on which predictor 106 may predict the afore-mentioned currently encoded prediction blocks. Predictor 106 may use different prediction modes such as intra prediction modes and inter prediction modes in order to predict the blocks and the prediction parameters are forwarded to entropy encoder 102 for insertion into the data stream.

[0046] That is, in accordance with the embodiment of Fig. 4, the transform coefficient blocks represent a spectral representation of a residual of the sample array rather than actual information samples thereof.

[0047] It should be noted that several alternatives exist for the embodiment of Fig. 4 with some of them having been described within the introductory portion of the specification which description is incorporated into the description of Fig. 4 herewith. For example, the prediction generated by predictor 106 may not be entropy encoded. Rather, the side

information may be transferred to the decoding side by way of another coding scheme.

[0048] Fig. 5 shows a decoder able to decode a data stream generated by the encoder of Fig. 4. The decoder of Fig. 5 comprises an entropy decoder 150, an inverse transform stage 152, an adder 154 and a predictor 156. Entropy decoder 150, inverse transform stage 152, and adder 154 are serially connected between an input 158 and an output 160 of the decoder of Fig. 5 in the order mentioned. A further output of entropy decoder 150 is connected to predictor 156 which, in turn, is connected between the output of adder 154 and a further input thereof. The entropy decoder 150 extracts, from the data stream entering the decoder of Fig. 5 at input 158, the transform coefficient blocks wherein an inverse transform is applied to the transform coefficient blocks at stage 152 in order to obtain the residual signal. The residual signal is combined with a prediction from predictor 156 at adder 154 so as to obtain a reconstructed block of the reconstructed version of the sample array at output 160. Based on the reconstructed versions, predictor 156 generates the predictions thereby rebuilding the predictions performed by predictor 106 at the encoder side. In order to obtain the same predictions as those used at the encoder side, predictor 156 uses the prediction parameters which the entropy decoder 150 also obtains from the data stream at input 158.

[0049] It should be noted that in the above-described embodiments, the spatial granularity at which the prediction and the transformation of the residual is performed, do not have to be equal to each other. This is shown in Fig. 2C. This figure shows a sub-division for the prediction blocks of the prediction granularity with solid lines and the residual granularity with dashed lines. As can be seen, the subdivisions may be selected by the encoder independent from each other. To be more precise, the data stream syntax may allow for a definition of the residual subdivision independent from the prediction subdivision. Alternatively, the residual subdivision may be an extension of the prediction subdivision so that each residual block is either equal to or a proper subset of a prediction block. This is shown on Fig. 2a and Fig. 2b, for example, where again the prediction granularity is shown with solid lines and the residual granularity with dashed lines. This, in Fig. 2a-2c, all blocks having a reference sign associated therewith would be residual blocks for which one two-dimensional transform would be performed while the greater solid line blocks encompassing the dashed line blocks 40a, for example, would be prediction blocks for which a prediction parameter setting is performed individually.

[0050] The above embodiments have in common that a block of (residual or original) samples is to be transformed at the encoder side into a transform coefficient block which, in turn, is to be inverse transformed into a reconstructed block of samples at the decoder side. This is illustrated in Fig. 6. Fig. 6 shows a block of samples 200. In case of Fig. 6, this block 200 is exemplarily quadratic and 4x4 samples 202 in size. The samples 202 are regularly arranged along a horizontal direction x and vertical direction y. By the above-mentioned two-dimensional transform T, block 200 is transformed into spectral domain, namely into a block 204 of transform coefficients 206, the transform block 204 being of the same size as block 200. That is, transform block 204 has as many transform coefficients 206 as block 200 has samples, in both horizontal direction and vertical direction. However, as transform T is a spectral transformation, the positions of the transform coefficients 206 within transform block 204 do not correspond to spatial positions but rather to spectral components of the content of block 200. In particular, the horizontal axis of transform block 204 corresponds to an axis along which the spectral frequency in the horizontal direction monotonically increases while the vertical axis corresponds to an axis along which the spatial frequency in the vertical direction monotonically increases wherein the DC component transform coefficient is positioned in a corner - here exemplarily the top left corner - of block 204 so that at the bottom right-hand corner, the transform coefficient 206 corresponding to the highest frequency in both horizontal and vertical direction is positioned. Neglecting the spatial direction, the spatial frequency to which a certain transform coefficient 206 belongs, generally increases from the top left corner to the bottom right-hand corner. By an inverse transform T^{-1}, the transform block 204 is retransferred from spectral domain to spatial domain, so as to re-obtain a copy 208 of block 200. In case no quantization/loss has been introduced during the transformation, the reconstruction would be perfect.

[0051] As already noted above, it may be seen from Fig. 6 that greater block sizes of block 200 increase the spectral resolution of the resulting spectral representation 204. On the other hand, quantization noise tends to spread over the whole block 208 and thus, abrupt and very localized objects within blocks 200 tend to lead to deviations of the re-transformed block relative to the original block 200 due to quantization noise. The main advantage of using greater blocks is, however, that the ratio between the number of significant, i.e. non-zero (quantized) transform coefficients on the one hand and the number of insignificant transform coefficients on the other hand may be decreased within larger blocks compared to smaller blocks thereby enabling a better coding efficiency. In other words, frequently, the significant transform coefficients, i.e. the transform coefficients not quantized to zero, are distributed over the transform block 204 sparsely. Due to this, in accordance with the embodiments described in more detail below, the positions of the significant transform coefficients is signaled within the data stream by way of a significance map. Separately therefrom, the values of the significant transform coefficient, i.e., the transform coefficient levels in case of the transform coefficients being quantized, are transmitted within the data stream.

[0052] Accordingly, according to an embodiment of the present application, an apparatus for decoding such a significance map along the corresponding significant transform coefficient values from the data stream, may be implemented as shown in Fig. 7, and each of the entropy decoders mentioned above, namely decoder 50 and entropy decoder 150, may comprise the apparatus shown in Fig. 7.

[0053] The apparatus of Fig. 7 comprises a map/coefficient entropy decoder 250 and an associator 252. The map/coefficient entropy decoder 250 is connected to an input 254 at which syntax elements representing the significance map and the significant transform coefficient values enter. As will be described in more detail below, different possibilities exist with respect to the order in which the syntax elements describing the significance map on the one hand and the significant transform coefficient values on the other hand enter map/coefficient entropy decoder 250. The significance map syntax elements may precede the corresponding levels, or both may be interleaved. However, preliminary it is assumed that the syntax elements representing the significance map precede the values (levels) of the significant transform coefficients so that the map/coefficient entropy decoder 250 firstly decodes the significance map and then the transform coefficient levels of the significant transform coefficients.

[0054] As map/coefficient entropy decoder 250 sequentially decodes the syntax elements representing the significance map and the significant transform coefficient values, the associator 252 is configured to associate these sequentially decoded syntax elements/values to the positions within the transform block 256. The scan order in which the associator 252 associates the sequentially decoded syntax elements representing the significance map and levels of the significant transform coefficients to the positions of the transform block 256 follows a one-dimensional scan order among the positions of the transform block 256 which is identical to the order used at the encoding side to introduce these elements into the data stream. As will also be outlined in more detail below, the scan order for the significance map syntax elements may be equal to the order used for the significant coefficient values, or not.

[0055] The map/coefficient entropy decoder 250 may access the information on the transform block 256 available so far, as generated by the associator 252 up to a currently to be decoded syntax element/level, in order to set probability estimation context for entropy decoding the syntax element/level currently to be decoded as indicated by a dashed line 258. For example, associator 252 may log the information gathered so far from the sequentially associated syntax elements such as the levels itself or the information as to whether at the respective position a significant transform coefficient is situated or not or as to whether nothing is known about the respective position of the transform block 256 wherein the map/coefficient entropy decoder 250 accesses this memory. The memory just mentioned is not shown in Fig. 7 but the reference sign 256 may also indicate this memory as the memory or log buffer would be for storing the preliminary information obtained by associator 252 and entropy decoder 250 so far. Accordingly, Fig. 7 illustrates by crosses positions of significant transform coefficients obtained from the previously decoded syntax elements representing the significance map and a "1" shall indicate that the significant transform coefficient level of the significant transform coefficient at the respective position has already been decoded and is 1. In case of the significance map syntax elements preceding the significant values in the data stream, a cross would have been logged into memory 256 at the position of the "1" (this situation would have represented the whole significance map) before entering the "1" upon decoding the respective value.

[0056] The following description concentrates on specific embodiments for coding the transform coefficient blocks or the significance map, which embodiments are readily transferable to the embodiments described above. In these embodiments, a binary syntax element coded_block_flag may be transmitted for each transform block, which signals whether the transform block contains any significant transform coefficient level (i.e., transform coefficients that are non-zero). If this syntax element indicates that significant transform coefficient levels are present, the significance map is coded, i.e. merely then. The significance map specifies, as indicated above, which of the transform coefficient levels have non-zero values. The significance map coding involves a coding of binary syntax elements significant_coeff_flag each specifying for a respectively associated coefficient position whether the corresponding transform coefficient level is not equal to zero. The coding is performed in a certain scan order which may change during the significance map coding dependent on the positions of significant coefficients identified to be significant so far, as will be described in more detail below. Further, the significance map coding involves a coding of binary syntax elements last_significant_coeff_flag interspersed with the sequence of significant_coeff_flag at the positions thereof, where significant_coeff_flag signals a significant coefficient. If the significant_coeff_flag bin is equal to one, i.e., if a non-zero transform coefficient level exists at this scanning position, the further binary syntax element last_significant_coeff_flag is coded. This bin indicates if the current significant transform coefficient level is the last significant transform coefficient level inside the block or if further significant transform coefficient levels follow in scanning order. If last_significant_coeff_flag indicates that no further significant transform coefficients follow, no further syntax elements are coded for specifying the significance map for the block. Alternatively, the number of significant coefficient positions could be signalled within the data stream in advance of the coding of the sequence of significant_coeff_flag. In the next step, the values of the significant transform coefficient levels are coded. As described above, alternatively, the transmission of the levels could be interleaved with the transmission of the significance map. The values of significant transform coefficient levels are coded in a further scanning order for which examples are described below. The following three syntax elements are used. The binary syntax element coeff_abs_greater_one indicates if the absolute value of the significant transform coefficient level is greater than one. If the binary syntax element coeff_abs_greater_one indicates that the absolute value is greater than one, a further syntax element coeff_abs_level_minus_one is sent, which specifies the absolute value of the transform coefficient level minus one. Finally, the binary syntax element coeff_sign_flag, which specifies the sign of the transform coefficient value, is

coded for each significant transform coefficient level.

[0057] The embodiments described below enable to further reduce the bit rate and thus increase the coding efficiency. In order to do so, these embodiments use a specific approach for context modelling for syntax elements related to the transform coefficients. In particular, a new context model selection for the syntax elements significant_coeff_flag, last_significant_coeff_flag, coeff_abs_greater_one and coeff_abs_level_minus_one is used. And furthermore, an adaptive switching of the scan during the encoding/decoding of the significance map (specifying the locations of non-zero transform coefficient levels) is described. As to the meaning of the must-mentioned syntax elements, reference is made to the above introductory portion of the present application.

[0058] The coding of the significant_coeff_flag and the last_significant_coeff_flag syntax elements, which specify the significance map, is improved by an adaptive scan and a new context modelling based on a defined neighbourhood of already coded scan positions. These new concepts result in a more efficient coding of significance maps (i.e., a reduction of the corresponding bit rate), in particular for large block sizes.

[0059] One aspect of the below-outlined embodiments is that the scan order (i.e., the mapping of a block of transform coefficient values onto an ordered set (vector) of transform coefficient levels) is adapted during the encoding/decoding of a significance map based on the values of the already encoded/decoded syntax elements for the significance map.

[0060] In a preferred embodiment, the scan order is adaptively switched between two or more predefined scan pattern. In a preferred embodiment, the switching can take place only at certain predefined scan positions. In a further preferred embodiment of the invention, the scan order is adaptively switched between two predefined scan patterns. In a preferred embodiment, the switching between the two predefined scan patterns can take place only at certain predefined scan positions.

[0061] The advantage of the switching between scan patterns is a reduced bit rate, which is a result of a smaller number of coded syntax elements. As an intuitive example and referring to Fig. 6, it is often the case that significant transform coefficient values - in particular for large transform blocks - are concentrated at one of the block borders 270, 272, because the residual blocks contain mainly horizontal or vertical structures. With the mostly used zig-zag scan 274, there exists a probability of about 0.5 that the last diagonal sub-scan of the zig-zag scan in which the last significant coefficient is encountered starts from the side at which the significant coefficients are not concentrated. In that case, a large number of syntax elements for transform coefficient levels equal to zero have to be coded before the last non-zero transform coefficient value is reached. This can be avoided if the diagonal sub-scans are always started at the side, where the significant transform coefficient levels are concentrated.

[0062] More details for a preferred embodiment of the invention are described below.

[0063] As mentioned above, also for large block sizes, it is preferable to keep the number of context models reasonably small in order to enable a fast adaptation of the context models and providing a high coding efficiency. Hence, a particular context should be used for more than one scan position. But the concept of assigning the same context to a number of successive scan positions, as done for 8x8 blocks in H.264, is usually not suitable, since the significant transform coefficient levels are usually concentrated in certain areas of a transform blocks (this concentration may be a result of certain dominant structures that are usually present in, for example residual blocks). For designing the context selection, one could use the above mentioned observation that significant transform coefficient levels are often concentrated in certain areas of a transform block. In the following, concepts are described by which this observation can be exploited.

[0064] In one preferred embodiment, a large transform block (e.g., greater than 8x8) is partitioned into a number of rectangular sub-blocks (e.g., into 16 sub-blocks) and each of these sub-blocks is associated with a separate context model for coding the significant_coeff_flag and last_significant_coeff_flag (where different context models are used for the significant_coeff_flag and last_significant_coeff_flag). The partitioning into sub-blocks can be different for the significant_coeff_flag and last_significant_coeff_flag. The same context model may be used for all scan positions that are located in a particular sub-block.

[0065] In a further preferred embodiment, a large transform block (e.g., greater than 8x8) may be partitioned into a number of rectangular and/or non-rectangular sub-regions and each of these sub-regions is associated with a separate context model for coding the significant_coeff_flag and/or the last_significant_coeff_flag. The partitioning into sub-regions can be different for the significant_coeff_flag and last_significant_coeff_flag. The same context model is used for all scan positions that are located in a particular sub-region.

[0066] In a further preferred embodiment, the context model for coding the significant_coeff_flag and/or the last_significant_coeff_flag is selected based on the already coded symbols in a predefined spatial neighbourhood of the current scan position. The predefined neighbourhood can be different for different scan positions. In a preferred embodiment, the context model is selected based on the number of significant transform coefficient levels in the predefined spatial neighbourhood of the current scan position, where only already coded significance indications are counted.

[0067] More details for a preferred embodiment of the invention are described below.

[0068] As mentioned above, for large block sizes, the conventional context modelling encodes a large number of bins (that usually have different probabilities) with one single context model for the coeff_abs_greater_one and coeff_abs_level_minus_one syntax elements. In order to avoid this drawback for large block size, large blocks may, in

accordance with an embodiment, be divided into small quadratic or rectangular sub-blocks of a particular size and a separate context modelling is applied for each sub-block. In addition, multiple sets of context models may be used, where one of these context model sets is selected for each sub-block based on an analysis of the statistics of previously coded sub-blocks. In a preferred embodiment invention, the number of transform coefficients greater than 2 (i.e.. coeff_abs_level_minus_1>1) in the previously coded sub-block of the same block is used to derive the context model set for the current sub-block. These enhancements for context modelling of the coeff_abs_greater_one and coeff_abs_level_minus_one syntax elements result in a more efficient coding of both syntax elements, in particular for large block sizes. In a preferred embodiment, the block size of a sub-block is 2x2. In another preferred embodiment, the block size of a sub-block is 4x4.

[0069] In a first step, a block larger than a predefined size may be divided into smaller sub-blocks of a particular size. The coding process of the absolute transform coefficient levels maps the quadratic or rectangular block of sub-blocks onto an ordered set (vector) of sub-blocks using a scan, where different scans can be used for different blocks. In a preferred embodiment, the sub-blocks are processed using a zig-zag scan; the transform coefficient levels inside a sub-block are processed in a reverse zig-zag scan, i.e. a scan loading from a transform coefficient belonging to the highest frequency in vertical and horizontal direction to the coefficient relating to the lowest frequency in both directions. In another preferred embodiment of the invention, a reversed zig-zag scan is used for coding the sub-blocks and for coding the transform coefficient levels inside the sub-blocks. In another preferred embodiment of the invention, the same adaptive scan that is used for coding the significance map (see above) is used to process the whole block of transform coefficient levels.

[0070] The division of a large transform block into sub-blocks avoids the problem of using just one context model for most of the bins of a large transform block. Inside the sub-blocks, the state-of-the-art context modelling (as specified in H.264) or a fixed context can be used, depending on the actual size of the sub-blocks. Additionally, the statistics (in terms of probability modelling) for such sub-blocks are different from the statistics of a transform block with the same size. This property may be exploited by extending the set of context models for the coeff_abs_greater_one and coeff_abs_level_minus_one syntax elements. Multiple sets of context models can be provided, and for each sub-block one of these context model sets may be selected based on the statistics of previously coded sub-block in current transform block or in previously coded transform blocks. In a preferred embodiment of the invention, the selected set of context models is derived based on the statistics of the previously coded sub-blocks in the same block. In another preferred embodiment of the invention, the selected set of context models is derived based on the statistics of the same sub-block of previously coded blocks. In a preferred embodiment, the number of context model sets is set equal to 4, while in another preferred embodiment, the number of context model sets is set equal to 16. In a preferred embodiment, the statistics that are used for deriving the context model set is the number of absolute transform coefficient levels greater than 2 in previously coded sub-blocks. In another preferred embodiment, the statistics that are used for deriving the context model set is the difference between the number of significant coefficients and the number of transform coefficient levels with an absolute value greater than 2.

[0071] The coding of the significance map may be performed as outlined below, namely by an adaptive switching of the scan order.

[0072] In a preferred embodiment, the scanning order for coding the significance map is adapted by switching between two predefined scan patterns. The switching between the scan patterns can only be done at certain predefined scan positions. The decision whether the scanning pattern is switched depends on the values of the already coded/decoded significance map syntax elements. In a preferred embodiment, both predefined scanning patterns specify scanning patterns with diagonal sub-scans, similar to the scanning pattern of the zig-zag scan. The scan patterns are illustrated in Fig. 8. Both scanning patterns 300 and 302 consist of a number of diagonal sub-scans for diagonals from bottom-left to top-right or vice versa. The scanning of the diagonal sub-scans (not illustrated in the figure) is done from top-left to bottom-right for both predefined scanning patterns. But the scanning inside the diagonal sub-scans is different (as illustrated in the figure). For the first scanning pattern 300, the diagonal sub-scans are scanned from bottom-left to top-right (left illustration of Figure 8), and for the second scanning pattern 302, the diagonal sub-scans are scanned from top-right to bottom-left (right illustration of Figure 8). In an embodiment, the coding of the significance map starts with the second scanning pattern. While coding/decoding the syntax elements, the number of significant transform coefficient values is counted by two counters c_1 and c_2. The first counter c_1 counts the number of significant transform coefficients that are located in the bottom-left part of the transform block; i.e., this counter is incremented by one when a significant transform coefficient level is coded/decoded for which the horizontal coordinate x inside the transform block is less than the vertical coordinate y. The second counter c_2 counts the number of significant transform coefficients that are located in the top-right part of the transform block; i.e., this counter is incremented by one when a significant transform coefficient level is coded/decoded for which the horizontal coordinate x inside the transform block is greater than the vertical coordinate y. The adaptation of the counters may be performed by associator 252 in Fig. 7 and can be described by the following formulas, where *t* specifies the scan position index and both counters are initialized with zero:

$$c_1(t+1) = \begin{cases} 1 + c_1(t), & x < y \\ c_1(t), & otherwise \end{cases}$$

$$c_2(t+1) = \begin{cases} 1 + c_2(t), & x > y \\ c_2(t), & otherwise \end{cases}$$

[0073] At the end of each diagonal sub-scan, it is decided by the associator 252 whether the first or the second of the predefined scanning patterns 300, 302 is used for the next diagonal sub-scan. This decision is based on the values of the counters c_1 and c_2. When the counter for the bottom-left part of the transform block is greater than the counter for the bottom-left part, the scanning pattern that scans the diagonal sub-scans from bottom-left to top-right is used; otherwise (the counter for the bottom-left part of the transform block is less than or equal to the counter for the bottom-left part), the scanning pattern that scans the diagonal sub-scans from top-right to bottom-left is used. This decision can be expressed by the following formula:

$$d_{t+1} = \begin{cases} top\ right\ to\ left\ bottom, & c_1 \leq c_2 \\ left\ bottom\ to\ top\ right, & c_1 > c_2 \end{cases}$$

[0074] It should be noted that the above described embodiment of the invention can be easily applied to other scanning patterns. As an example, the scanning pattern that is used for field macroblocks in H.264 can also be decomposed into sub-scans. In a further preferred embodiment, a given but arbitrary scanning pattern is decomposed into sub-scans. For each of the sub-scans, two scanning patterns are defined: one from bottom-left to top-right and one from top-right to bottom-left (as basic scan direction). In addition, two counters are introduced which count the number of significant coefficients in a first part (close to the bottom-left border of a transform blocks) and a second part (close to the top-right border of a transform blocks) inside the sub-scans. Finally, at the end of each sub-scan it is decided (based on the values of the counters), whether the next sub-scan is scanned from bottom-left to top-right or from top-right to bottom-left.

[0075] In the following, embodiments for as to how entropy decoder 250 models the contexts, are presented.

[0076] In one preferred embodiment, the context modelling for the significant_coeff_flag is done as follows. For 4x4 blocks, the context modelling is done as specified in H.264. For 8x8 blocks, the transform block is decomposed into 16 sub-blocks of 2x2 samples, and each of these sub-blocks is associated with a separate context. Note that this concept can also be extended to larger block sizes, a different number of sub-blocks, and also non-rectangular sub-regions as described above.

[0077] In a further preferred embodiment, the context model selection for larger transform blocks (e.g., for blocks greater than 8x8) is based on the number of already coded significant transform coefficients in a predefined neighbourhood (inside the transform block). An example for the definition of neighbourhoods, which corresponds to a preferred embodiment of the invention, is illustrated in Figure 9. Crosses with a circle around same are available neighbours, which are always taken into account for the evaluation and crosses with a triangle are neighbours which are evaluated depending on the current scan position and current scan direction):

- If the current scan position lies in the inside the 2x2 left corner 304, a separate context model is used for each scan position (Figure 9, left illustration)
- If the current scan position does not lie inside the 2x2 left corner and is not located on the first row or the first column of the transform block, then the neighbours illustrated on the right in Figure 9 are used for evaluating the number of significant transform coefficients in the neighbourhood of the current scan position "x" without anything around it.
- If the current scan position "x" without anything around it falls into the first row of the transform block, then the neighbours specified in the right illustration of Figure 10 are used
- If the current scan position "x" falls in to the first column of the block, then the neighbours specified in the left illustration of Figure 10 are used.

[0078] In other words, the decoder 250 may be configured to sequentially extract the significance map syntax elements by context-adaptively entropy decoding by use of contexts which are individually selected for each of the significance map syntax elements depending on a number of positions at which according to the previously extracted and associated significance map syntax elements significant transform coefficients are situated, the positions being restricted to ones lying in a neighborhood of the position ("x" in Fig. 9 right-hand side and Fig. 10 both sides, and any of the marked positions of the left hand side of Fig. 9) with which the respective current significance map syntax element is associated. As shown, the neighborhood of the position with which the respective current syntax element is associated, may merely

comprise positions either directly adjacent to or separated from the position with which the respective significance map syntax element is associated, at one position in vertical direction and/or one position in the horizontal direction at the maximum. Alternatively, merely positions directly adjacent to the respective current syntax element may be taken into account,. Concurrently, the size of the transform coefficient block may be equal to or greater than 8x8 positions.

[0079] In a preferred embodiment, the context model that is used for coding a particular significant_coeff_flag is chosen depending on the number of already coded significant transform coefficient levels in the defined neighbourhoods. Here, the number of available context models can be smaller than the possible value for the number of significant transform coefficient levels in the defined neighbourhood. The encoder and decoder can contain a table (or a different mapping mechanism) for mapping the number of significant transform coefficient levels in the defined neighbourhood onto a context model index.

[0080] In a further preferred embodiment, the chosen context model index depends on the number of significant transform coefficient levels in the defined neighbourhood and on one or more additional parameters as the type of the used neighbourhood or the scan position or a quantized value for the scan position.

[0081] For the coding of the last_significant_coeff_flag, a similar context modelling as for the significant_coeff_flag can be used. However, the probability measure for the last_significant_coeff_flag mainly depends on a distance of the current scan position to the top-left corner of the transform block. In a preferred embodiment, the context model for coding the last_significant_coeff_flag is chosen based on the scan diagonal on which the current scan position lies (i.e., it is chosen based on x + y, where x and y represent the horizontal and vertical location of a scan position inside the transform block, respectively, in case of the above embodiment of Fig. 8, or based on how many sub-scans by between the current sub-scan and the upper left DC position (such as sub-scan index minus 1)). In a preferred embodiment of the invention, the same context is used for different values of x + y. The distance measure i.e. x + y or the sub-scan index is mapped on the set of context models in a certain way (e.g. by quantizing x + y or the sub-san index), where the number of possible values for the distance measure is greater than the number of available context models for coding the last_significant_coeff_flag.

[0082] In a preferred embodiment, different context modelling schemes are used for different sizes of transform blocks.

[0083] In the following the coding of the absolute transform coefficient levels is described.

[0084] In one preferred embodiment, the size of sub-blocks is 2x2 and the context modelling inside the sub-blocks is disabled, i.e., one single context model is used for all transform coefficients inside a 2x2 sub-block. Only blocks larger than 2x2 may be affected by the subdivision process. In a further preferred embodiment of this invention, the size of the sub-blocks is 4x4 and the context modelling inside the sub-blocks is done as in H.264; only blocks larger than 4x4 are affected by the subdivision process.

[0085] As to the scan order, in a preferred embodiment, a zig-zag scan 320 is employed for scanning the sub-blocks 322 of a transform block 256 i.e. along a direction of substantially increasing frequency, while the transform coefficients inside a sub-block are scanned in a reverse zig-zag scan 326 (Figure 11). In a further preferred embodiment of the invention, both the sub-blocks 322 and the transform coefficient levels inside the sub-blocks 322 are scanned using a reverse zig-zag scan (like the illustration in Figure 11, where the arrow 320 is inversed). In another preferred embodiment, the same adaptive scan as for coding the significance map is used to process the transform coefficient levels, where the adaptation decision is the same, so that exactly the same scan is used for both the coding of the significance map and the coding of the transform coefficient level values. It should be noted that the scan itself does usually not depend on the selected statistics or the number of context model sets or on the decision for enabling or disabling the context modelling inside the sub-blocks.

[0086] Next embodiments for context modelling for the coefficient levels are described.

[0087] In a preferred embodiment, the context modelling for a sub-block is similar to the context modelling for 4x4 blocks in H.264 as has been described above. The number of context models that are used for coding the coeff_abs_greater_one syntax element and the first bin of the coeff_abs_level_minus_one syntax element is equal to five, with, for example, using different sets of context models for the two syntax elements. In a further preferred embodiment, the context modelling inside the sub-blocks is disabled and only one predefined context model is used inside each sub-block. For both embodiments, the context model set for a sub-block 322 is selected among a predefined number of context model sets. The selection of the context model set for a sub-block 322 is based on certain statistics of one or more already coded sub-blocks. In a preferred embodiment, the statistics used for selecting a context model set for a sub-block are taken from one or more already coded sub-blocks in the same block 256. How the statistics are used to derive the selected context model set is described below. In a further preferred embodiment, the statistics are taken from the same sub-block in a previously coded block with the same block size such as block 40a and 40a' in Fig. 2b. In another preferred embodiment of the invention, the statistics are taken from a defined neighbouring sub-block in the same block, which depends on the selected scan for the sub-blocks. Also, it is important to note that the source of the statistics should be independent from the scan order and how the statistics are created to derive the context model set.

[0088] In a preferred embodiment, the number of context model sets is equal to four, while in another preferred embodiment, the number of context model sets is equal to 16. Commonly, the number of context model sets is not fixed

and should be adapted in accordance with the selected statistics. In a preferred embodiment, the context model set for a sub-block 322 is derived based on the number of absolute transform coefficient levels greater than two in one or more already coded sub-blocks. An index for the context model set is determined by mapping the number of absolute transform coefficient levels greater than two in the reference sub-block or reference sub-blocks onto a set of predefined context model indices. This mapping can be implemented by quantizing the number of absolute transform coefficient levels greater than two or by a predefined table. In a further preferred embodiment, the context model set for a sub-block is derived based on the difference between the number of significant transform coefficient levels and the number of absolute transform coefficient levels greater than two in one or more already coded sub-blocks. An index for the context model set is determined by mapping this difference onto a set of predefined context model indices. This mapping can be implemented by quantizing the difference between the number of significant transform coefficient levels and the number of absolute transform coefficient levels greater than two or by a predefined table.

[0089] In another preferred embodiment, when the same adaptive scan is used for processing the absolute transform coefficient levels and the significance map, the partial statistics of the sub-blocks in the same blocks may be used to derive the context model set for the current sub-block. or, if available, the statistics of previously coded sub-blocks in previously coded transform blocks may be used. That means, for example, instead of using the absolute number of absolute transform coefficient levels greater than two in the sub-block(s) for deriving the context model, the number of already coded absolute transform coefficient levels greater than two multiplied by the ratio of the number of transform coefficients in the sub-block(s) and the number of already coded transform coefficients in the sub-block(s) is used; or instead of using the difference between the number of significant transform coefficient levels and the number of absolute transform coefficient levels greater than two in the sub-block(s), the difference between the number of already coded significant transform coefficient levels and the number of already coded absolute transform coefficient levels greater than two multiplied by the ratio of the number of transform coefficients in the sub-block(s) and the number of already coded transform coefficients in the sub-block(s) is used.

[0090] For the context modelling inside the sub-blocks, basically the inverse of the state-of-the-art context modelling for H.264 may be employed. That means, when the same adaptive scan is used for processing the absolute transform coefficient levels and the significance map, the transform coefficient levels are basically coded in a forward scan order, instead of a reverse scan order as in H.264. Hence, the context model switching have to be adapted accordingly. According to one embodiment, the coding of the transform coefficients levels starts with a first context model for coeff_abs_greater_one and coeff_abs_level_minus_one syntax elements, and it is switched to the next context model in the set when two coeff_abs_greater_one syntax elements equal to zero have been coded since the last context model switch. In other words, the context selection is dependent on the number of already coded coeff_abs_greater_one syntax elements greater than zero in scan order. The number of context models for coeff_abs_greater_one and for coeff_abs_level_minus_one may be the same as in H.264.

[0091] Thus, the above embodiments may be applied to the field of digital signal processing and, in particular, to image and video decoders and encoders. In particular, the above embodiments enable a coding of syntax elements related to transform coefficients in block-based image and video codecs, with an improved context modelling for syntax elements related to transform coefficients that are coded with an entropy coder that employs a probability modelling. In comparison to the state-of-the-art, an improved coding efficiency is achieved in particular for large transform blocks.

[0092] Although some aspects have been described in the context of an apparatus, it is clear that these aspects also represent a description of the corresponding method, where a block or device corresponds to a method step or a feature of a method step. Analogously, aspects described in the context of a method step also represent a description of a corresponding block or item or feature of a corresponding apparatus.

[0093] The inventive encoded signal for representing the transform block or the significance map, respectively, can be stored on a digital storage medium or can be transmitted on a transmission medium such as a wireless transmission medium or a wired transmission medium such as the Internet.

[0094] Depending on certain implementation requirements, embodiments of the invention can be implemented in hardware or in software. The implementation can be performed using a digital storage medium, for example a floppy disk, a DVD, a Blue-Ray, a CD, a ROM, a PROM, an EPROM, an EEPROM or a FLASH memory, having electronically readable control signals stored thereon, which cooperate (or are capable of cooperating) with a programmable computer system such that the respective method is performed. Therefore, the digital storage medium may be computer readable.

[0095] Some embodiments according to the invention comprise a data carrier having electronically readable control signals, which are capable of cooperating with a programmable computer system, such that one of the methods described herein is performed.

[0096] Generally, embodiments of the present invention can be implemented as a computer program product with a program code, the program code being operative for performing one of the methods when the computer program product runs on a computer. The program code may for example be stored on a machine readable carrier.

[0097] Other embodiments comprise the computer program for performing one of the methods described herein, stored on a machine readable carrier.

[0098] In other words, an embodiment of the inventive method is, therefore, a computer program having a program code for performing one of the methods described herein, when the computer program runs on a computer.

[0099] A further embodiment of the inventive methods is, therefore, a data carrier (or a digital storage medium, or a computer-readable medium) comprising, recorded thereon, the computer program for performing one of the methods described herein.

[0100] A further embodiment of the inventive method is, therefore, a data stream or a sequence of signals representing the computer program for performing one of the methods described herein. The data stream or the sequence of signals may for example be configured to be transferred via a data communication connection, for example via the Internet.

[0101] A further embodiment comprises a processing means, for example a computer, or a programmable logic device, configured to or adapted to perform one of the methods described herein.

[0102] A further embodiment comprises a computer having installed thereon the computer program for performing one of the methods described herein.

[0103] In some embodiments, a programmable logic device (for example a field programmable gate array) may be used to perform some or all of the functionalities of the methods described herein. In some embodiments, a field programmable gate array may cooperate with a microprocessor in order to perform one of the methods described herein. Generally, the methods are preferably performed by any hardware apparatus.

[0104] The above described embodiments are merely illustrative for the principles of the present invention. It is understood that modifications and variations of the arrangements and the details described herein will be apparent to others skilled in the art. It is the intent, therefore, to be limited only by the scope of the impending patent claims and not by the specific details presented by way of description and explanation of the embodiments herein.

[0105] One embodiment provides an apparatus for decoding a transform coefficient block, comprising: a decoder 250 configured to extract a significance map indicating positions of significant transform coefficients within the transform coefficient block, and then the values of the significant transform coefficients within the transform coefficient block from a data stream, with, in extracting the values of the significant transform coefficients, sequentially extracting the values by context-adaptive entropy decoding; and an associator 252 configured to sequentially associate the sequentially extracted values with the positions of the significant transform coefficients in a predetermined coefficient scan order among the positions of the transform coefficient block, according to which the transform coefficient block is scanned in sub-blocks 322 of the transform coefficient block 256 using a sub-block scan order 320 with, subsidiary, scanning the positions of the transform coefficients within the sub-blocks in a position sub-scan order 324, wherein the decoder 250 is configured to use, in sequentially context-adapted entropy decoding the values of the significant transform coefficient values, a selected set of a number of contexts from a plurality of sets of a number of contexts, the selection of the selected set being performed for each sub-block depending on the values of the transform coefficients within a sub-block of the transform coefficient block, already having been traversed in the sub-block scan order, or the values of the transform coefficients of a co-located sub-block in an equally sized previously decoded transform coefficient block.

[0106] According to one aspect of the apparatus, the decoder 250 is configured to sequentially extract the first-type syntax elements by context-adaptively entropy decoding by use of contexts which are individually selected for each of the first-type syntax elements depending on a number of positions at which according to the previously extracted and associated first-type syntax elements significant transform coefficients are situated, in a neighborhood of the position with which the respective first-type syntax element is associated.

[0107] According to another aspect of the apparatus, the decoder is further configured such that the neighborhood of the position with which the respective first-type syntax element is associated merely comprises positions directly adjacent to, or positions either directly adjacent to or separated from the position with which the respective first-type syntax element is associated, at one position in vertical direction and/or one position in the horizontal direction at the maximum, wherein the size of the transform coefficient clock is equal to or greater than 8x8 positions.

[0108] According to another aspect of the apparatus, the decoder is further configured to map the number of positions at which according to the previously extracted and associated first-type syntax elements significant transform coefficients are situated, in the neighborhood of the position with which the respective first-type syntax element is associated, to a context index of a predetermined set of possible context indices under weighting with a number of available positions in the neighborhood of the position with which the respective first-type syntax element is associated.

[0109] Another embodiment provides an apparatus for decoding a significance map indicating positions of significant transform coefficients within a transform coefficient block from a data stream comprising: an decoder 250 configured to extract a significance map indicating positions of significant transform coefficients within the transform coefficient block, and then the values of the significant transform coefficients within the transform coefficient block from a data stream, with, in extracting the significance map, sequentially extracting first-type syntax elements from the data stream by context-adaptive entropy decoding, the first-type syntax elements indicating, for associated positions within the transform coefficient block as to whether at the respective position a significant or insignificant transform coefficient is situated; and an associator 250 configured to sequentially associate the sequentially extracted first-type syntax elements to the positions of the transform coefficient block in a predetermined scan order among the positions of the transform coefficient

block, wherein the decoder is configured to use, in context-adaptively entropy decoding the first-type syntax elements, contexts which are individually selected for each of the first-type syntax elements depending on a number of positions at which according to the previously extracted and associated first-type syntax elements significant transform coefficients are situated, in a neighborhood of the position with which a current first-type syntax element is associated.

[0110] According to one aspect of the apparatus, the decoder 250 is further configured such that the neighborhood of the position with which the respective first-type syntax element is associated merely comprises positions directly adjacent to, or positions either directly adjacent to or separated from the position with which the respective first-type syntax element is associated, at one position in vertical direction and/or one position in the horizontal direction at the maximum, wherein the size of the transform coefficient clock is equal to or greater than 8x8 positions.

[0111] Another embodiment provides a transform-based decoder configured to decode a transform coefficient block using an apparatus 150 for decoding a significance map indicating positions of significant transform coefficients within the transform coefficient block from a data stream, and to perform 152 a transform from spectral domain to spatial domain to the transform coefficient block.

[0112] Another embodiment provides a predictive decoder comprising: a transform-based decoder 150, 152 configured to decode a transform coefficient block using an apparatus for decoding a significance map indicating positions of significant transform coefficients within the transform coefficient block from a data stream, according to any of claims 1 to 11, and to perform a transform from spectral domain to spatial domain to the transform coefficient block to obtain a residual block; a predictor 156 configured to provide a prediction for a block of an array of information samples representing an spatially sampled information signal; and a combiner 154 configured to combine the prediction of the block and the residual block to reconstruct the array of information samples.

[0113] Another embodiment provides an apparatus for encoding a significance map indicating positions of significant transform coefficients within a transform coefficient block into a data stream, the apparatus being configured to sequentially code first-type syntax elements into the data stream by entropy encoding, the first-type syntax elements indicating, for associated positions within the transform coefficient block, at least, as to whether at the respective position a significant or insignificant transform coefficient is situated, wherein the apparatus is further configured to the first-type syntax elements into the data stream at a scan order among the positions of the transform coefficient block, which depends on the positions of the significant transform coefficients indicated by previously coded first-type syntax elements.

[0114] Another embodiment provides an apparatus for encoding a significance map indicating positions of significant transform coefficients within a transform coefficient block into a data stream, the apparatus being configured to code a significance map indicating positions of significant transform coefficients within the transform coefficient block, and then the values of the significant transform coefficients within the transform coefficient block into the data stream, with, in coding the significance map, sequentially coding first-type syntax elements into the data stream by context-adaptive entropy encoding, the first-type syntax elements indicating, for associated positions within the transform coefficient block as to whether at the respective position a significant or insignificant transform coefficient is situated, wherein the apparatus is further configured to sequentially code the first-type syntax elements into the data stream in a predetermined scan order among the positions of the transform coefficient block, wherein the apparatus is configured to use, in context-adaptively entropy encoding each of the first-type syntax elements, contexts which are individually selected for the first-type syntax elements depending on a number of positions at which significant transform coefficients are situated and with which the previously coded first-type syntax elements are associated, in a neighborhood of the position with which a current first-type syntax element is associated.

[0115] Another embodiment provides a method for decoding a significance map indicating positions of significant transform coefficients within a transform coefficient block from a data stream, the method comprising: sequentially extracting first-type syntax elements from the data stream, the first-type syntax elements indicating, for associated positions within the transform coefficient block, at least, as to whether at the respective position a significant or insignificant transform coefficient is situated; and sequentially associating the sequentially extracted first-type syntax elements to the positions of the transform coefficient block in a scan order among the positions of the transform coefficient block, which depends on the positions of the significant transform coefficients indicated by previously extracted and associated first-type syntax elements.

[0116] Another embodiment provides a method for decoding a significance map indicating positions of significant transform coefficients within a transform coefficient block from a data stream, comprising: extracting a significance map indicating positions of significant transform coefficients within the transform coefficient block, and then the values of the significant transform coefficients within the transform coefficient block from a data stream, with, in extracting the significance map, sequentially extracting first-type syntax elements from the data stream by context-adaptive entropy decoding, the first-type syntax elements indicating, for associated positions within the transform coefficient block as to whether at the respective position a significant or insignificant transform coefficient is situated; and sequentially associating the sequentially extracted first-type syntax elements to the positions of the transform coefficient block in a predetermined scan order among the positions of the transform coefficient block, wherein, in context-adaptively entropy decoding the first-type syntax elements, contexts are used which are individually selected for each of the first-type syntax elements

depending on a number of positions at which according to the previously extracted and associated first-type syntax elements significant transform coefficients are situated, in a neighborhood of the position with which a current first-type syntax element is associated.

[0117] Another embodiment provides a method for encoding a significance map indicating positions of significant transform coefficients within a transform coefficient block into a data stream, the method comprising: sequentially coding first-type syntax elements into the data stream by entropy encoding, the first-type syntax elements indicating, for associated positions within the transform coefficient block, at least, as to whether at the respective position a significant or insignificant transform coefficient is situated, with coding the first-type syntax elements into the data stream at a scan order among the positions of the transform coefficient block, which depends on the positions of the significant transform coefficients indicated by previously coded first-type syntax elements.

[0118] Another embodiment provides a method for encoding a significance map indicating positions of significant transform coefficients within a transform coefficient block into a data stream, the method comprising: coding a significance map indicating positions of significant transform coefficients within the transform coefficient block, and then the values of the significant transform coefficients within the transform coefficient block into the data stream, with, in coding the significance map, sequentially coding first-type syntax elements into the data stream by context-adaptive entropy encoding, the first-type syntax elements indicating, for associated positions within the transform coefficient block as to whether at the respective position a significant or insignificant transform coefficient is situated, wherein the sequentially coding the first-type syntax elements into the data stream is performed in a predetermined scan order among the positions of the transform coefficient block, and in context-adaptively entropy encoding each of the first-type syntax elements, contexts are used which are individually selected for the first-type syntax elements depending on a number of positions at which significant transform coefficients are situated and with which the previously coded first-type syntax elements are associated, in a neighborhood of the position with which a current first-type syntax element is associated.

[0119] Another embodiment provides a data stream having encoded therein a significance map indicating positions of significant transform coefficients within a transform coefficient block, wherein first-type syntax elements are sequentially coded into the data stream by entropy encoding, the first-type syntax elements indicating, for associated positions within the transform coefficient block, at least, as to whether at the respective position a significant or insignificant transform coefficient is situated, wherein the first-type syntax elements are coded into the data stream at a scan order among the positions of the transform coefficient block, which depends on the positions of the significant transform coefficients indicated by previously coded first-type syntax elements.

[0120] Another embodiment provides a data stream having encoded therein significance map indicating positions of significant transform coefficients within a transform coefficient block, wherein a significance map indicating positions of significant transform coefficients within the transform coefficient block, followed by the values of the significant transform coefficients within the transform coefficient block are coded into the data stream, wherein, within the significance map, the first-type syntax elements are sequentially codes into the data stream by context-adaptive entropy encoding, the first-type syntax elements indicating, for associated positions within the transform coefficient block as to whether at the respective position a significant or insignificant transform coefficient is situated, wherein the first-type syntax elements are sequentially coding into the data stream in a predetermined scan order among the positions of the transform coefficient block, and the first-type syntax elements are context-adaptively entropy encoded into the data stream using contexts which are individually selected for the first-type syntax elements depending on a number of positions at which significant transform coefficients are situated and with which the preceding first-type syntax elements coded into the data stream are associated, in a neighborhood of the position with which a current first-type syntax element is associated.

Claims

1. Apparatus for decoding a transform coefficient block, comprising:

a decoder (250) configured to extract a significance map indicating positions of significant transform coefficients within the transform coefficient block, and then the values of the significant transform coefficients within the transform coefficient block from a data stream, with, in extracting the values of the significant transform coefficients, sequentially extracting the values by context-adaptive entropy decoding; and
an associator (252) configured to sequentially associate the sequentially extracted values with the positions of the significant transform coefficients in a predetermined coefficient scan order among the positions of the transform coefficient block, **characterized in that** the transform coefficient block is scanned in sub-blocks (322) of the transform coefficient block (256) using a sub-block scan order (320) with, subsidiary, scanning the positions of the transform coefficients within the sub-blocks in a position sub-scan order (324),

wherein the decoder (250) is configured to use, in sequentially context-adapted entropy decoding the values of the

significant transform coefficient values, a selected set of a number of contexts from a plurality of sets of a number of contexts, wherein the decoder (250) is configured such that the selection of the selected set being performed for each sub-block depends on the values of the transform coefficients within a sub-block of the transform coefficient block, already having been traversed in the sub-block scan order, or such that the selection of the selected set being performed for each sub-block depends on the values of the transform coefficients of a co-located sub-block in an equally sized previously decoded transform coefficient block.

2. Apparatus according to claim 1 wherein the decoder is configured such that the number of contexts of the plurality of sets of contexts is greater than one, and configured to, in sequentially context-adapted entropy decoding the values of the significant transform coefficient values within a sub-block using the selected set of the number of contexts for the respective sub-block, uniquely assign the contexts of the selected set of the number of contexts to the positions within the respective sub-block.

3. Apparatus according to claim 1 or 2 wherein the associator (252) is configured such that the sub-block scan order leads zigzag-wise from a sub-block including a position of a lowest frequency in a vertical direction and a horizontal direction to a sub-block including a position of a highest frequency in both the vertical and horizontal directions, while the position sub-scan order leads, in each sub-block, zigzag-wise from a position within the respective sub-block, relating to a highest frequency in a vertical direction and a horizontal direction to a position of the respective sub-block relating to a lowest frequency in both the vertical and horizontal directions.

4. Apparatus according to any of claims 1 to 3, wherein the decoder is configured to, in extracting the significance map from the data stream,
sequentially extract first-type syntax elements from the data stream, the first-type syntax elements indicating, for associated positions within the transform coefficient block (256), at least, as to whether at the respective position a significant or insignificant transform coefficient is situated;
the associator (252) is configured to sequentially associate the sequentially extracted first-type syntax elements to the positions of the transform coefficient block in a scan order among the positions of the transform coefficient block, which depends on the positions of the significant transform coefficients indicated by previously extracted and associated first-type syntax elements.

5. Apparatus according to claim 4, wherein the decoder (250) is further configured to recognize, based on an information in the data stream, and independent from a number of positions of the insignificant transform coefficients indicated by the previously extracted and associated first-type syntax elements, as to whether at a position with which a currently extracted first-type syntax element is associated, which indicates that at this position a significant transform coefficient is situated, a last significant transform coefficient in the transform coefficient block is situated.

6. Apparatus according to claim 4 or 5, wherein the decoder (250) is further configured to extract, between first-type syntax elements indicating that at the respective associated position a significant transform coefficient is situated, and immediately subsequent first-type syntax elements, second-type syntax elements from the bit stream indicating, for the associated positions at which a significant transform coefficient is situated, as to whether the respective associated position is the last significant transform coefficient in the transform coefficient block.

7. Apparatus according to any of claims 4 to 6, wherein the decoder (250) is further configured to serially extract, after extraction of all first-type syntax elements of the transform coefficient block, values of the significant transform coefficients within the transform coefficient block from the data stream by context-adaptive entropy decoding, wherein the associator (252) is configured to sequentially associate the sequentially extracted values with the positions of the significant transform coefficients in a predetermined coefficient scan order among the positions of the transform coefficient block, according to which the transform coefficient block is scanned in sub-blocks (322) of the transform coefficient block (256) using a sub-block scan order (320) with, subsidiary, scanning the positions of the transform coefficients within the sub-blocks (322) in a position sub-scan order (324), wherein the decoder is configured to use, in sequentially context-adapted entropy decoding the values of the significant transform coefficient values, a selected set of a number of contexts from a plurality of sets of a number of contexts, the selection of the selected set being performed for each sub-block depending on the values of the transform coefficients within a sub-block of the transform coefficient block, already having been traversed in the sub-block scan order (320), or the values of the transform coefficients of a co-located sub-block in an equally sized previously decoded transform coefficient block.

8. Apparatus according to any of claims 4 to 7, wherein the associator (252) is further configured to sequentially associate the sequentially extracted first-type syntax elements to the positions of the transform coefficient block

along a sequence of sub-paths extending between a first pair of adjacent sides of the transform coefficient block along which positions of a lowest frequency in a horizontal direction and positions of a highest frequency in a vertical direction, respectively, are positioned, and a second pair of adjacent sides of the transform coefficient block along which positions of a lowest frequency in the vertical direction and positions of a highest frequency in the horizontal direction, respectively, are positioned, with the sub-paths having a increasing distance from a position of the lowest frequency in both the vertical and horizontal directions, and wherein the associator (252) is configured to determine a direction (300, 302) along which the sequentially extracted first-type syntax elements are associated to the positions of the transform coefficient block, based on the positions of the significant transform coefficients within the previous sub-scans.

9. Apparatus according to any of claims 1 to 8, wherein
the decoder (250) is configured to, in extracting the significance map indicating positions of significant transform coefficients within the transform coefficient block, sequentially extract first-type syntax elements from the data stream by context-adaptive entropy decoding, the first-type syntax elements indicating, for associated positions within the transform coefficient block as to whether at the respective position a significant or insignificant transform coefficient is situated; and
the associator (250) is configured to sequentially associate the sequentially extracted first-type syntax elements to the positions of the transform coefficient block in the predetermined scan order among the positions of the transform coefficient block,
wherein the decoder is configured to use, in context-adaptively entropy decoding the first-type syntax elements, contexts which are individually selected for each of the first-type syntax elements depending on a number of positions at which according to the previously extracted and associated first-type syntax elements significant transform coefficients are situated, in a neighborhood of the position with which a current first-type syntax element is associated.

10. Apparatus according to claim 9, wherein the decoder (250) is further configured to map the number of positions at which according to the previously extracted and associated first-type syntax elements significant transform coefficients are situated, in the neighborhood of the position with which the respective first-type syntax element is associated, to a context index of a predetermined set of possible context indices under weighting with a number of available positions in the neighborhood of the position with which the respective first-type syntax element is associated.

11. Apparatus according to any of claims 1 to 10, wherein the transform coefficient block relates to a depth map content.

12. Apparatus for encoding a transform coefficient block, configured to code a significance map indicating positions of significant transform coefficients within the transform coefficient block, and then the values of the significant transform coefficients within the transform coefficient block into a data stream, with, in extracting the values of the significant transform coefficients, sequentially coding the values by context-adaptive entropy encoding, wherein the apparatus is configured to code the values into the data stream in a predetermined coefficient scan order among the positions of the transform coefficient block, **characterized in that** the transform coefficient block is scanned in sub-blocks of the transform coefficient block using a sub-block scan order with, subsidiary, scanning the positions of the transform coefficients within the sub-blocks in a position sub-scan order, wherein the apparatus is further configured to use, in sequentially context-adapted entropy encoding the values of the significant transform coefficient values, a selected set of a number of contexts from a plurality of sets of a number of contexts, wherein the apparatus is configured such that the selection of the selected set being performed for each sub-block depends on the values of the transform coefficients within a sub-block of the transform coefficient block, already having been traversed in the sub-block scan order, or such that the selection of the selected set being performed for each sub-block depends on the values of the transform coefficients of a co-located sub-block in an equally sized previously encoded transform coefficient block.

13. Apparatus according to claim 12, wherein the transform coefficient block relates to a depth map content.

14. Method for decoding a transform coefficient block, comprising:

extracting a significance map indicating positions of significant transform coefficients within the transform coefficient block, and then the values of the significant transform coefficients within the transform coefficient block from a data stream, with, in extracting the values of the significant transform coefficients, sequentially extracting the values by context-adaptive entropy decoding; and
sequentially associating the sequentially extracted values with the positions of the significant transform coeffi-

cients in a predetermined coefficient scan order among the positions of the transform coefficient block, **characterized in that** the transform coefficient block is scanned in sub-blocks of the transform coefficient block using a sub-block scan order with, subsidiary, scanning the positions of the transform coefficients within the sub-blocks in a position sub-scan order,

wherein, in sequentially context-adapted entropy decoding the values of the significant transform coefficient values, a selected set of a number of contexts from a plurality of sets of a number of contexts is used, the selection of the selected set being performed for each sub-block depending on the values of the transform coefficients within a sub-block of the transform coefficient block, already having been traversed in the sub-block scan order, or the selection of the selected set being performed for each sub-block depending on the values of the transform coefficients of a co-located sub-block in an equally sized previously decoded transform coefficient block.

15. Method for encoding a transform coefficient block, comprising coding a significance map indicating positions of significant transform coefficients within the transform coefficient block, and then the values of the significant transform coefficients within the transform coefficient block into a data stream, with, in coding the values of the significant transform coefficients, sequentially coding the values by context-adaptive entropy encoding, wherein the coding the values into the data stream is performed in a predetermined coefficient scan order among the positions of the transform coefficient block, **characterized in that** the transform coefficient block is scanned in sub-blocks of the transform coefficient block using a sub-block scan order with, subsidiary, scanning the positions of the transform coefficients within the sub-blocks in a position sub-scan order, wherein in sequentially context-adapted entropy encoding the values of the significant transform coefficient values, a selected set of a number of contexts from a plurality of sets of a number of contexts is used, the selection of the selected set being performed for each sub-block depending on the values of the transform coefficients within a sub-block of the transform coefficient block, already having been traversed in the sub-block scan order, or the selection of the selected set being performed for each sub-block depending on the values of the transform coefficients of a co-located sub-block in an equally sized previously encoded transform coefficient block.

16. Data stream comprising a coding of a significance map indicating positions of significant transform coefficients within the transform coefficient block, followed by the values of the significant transform coefficients within the transform coefficient block, wherein the values of the significant transform coefficients are sequentially coded into the data stream by context-adaptive entropy encoding in a predetermined coefficient scan order among the positions of the transform coefficient block, **characterized in that** the transform coefficient block is scanned in sub-blocks of the transform coefficient block using a sub-block scan order with, subsidiary, scanning the positions of the transform coefficients within the sub-blocks in a position sub-scan order, wherein the values of the significant transform coefficient values are sequentially context-adapted entropy encoded into the data stream using a selected set of a number of contexts from a plurality of sets of a number of contexts, the selection of the selected set being performed for each sub-block depending on the values of the transform coefficients within a sub-block of the transform coefficient block, already having been traversed in the sub-block scan order, or the selection of the selected set being performed for each sub-block depending on the values of the transform coefficients of a co-located sub-block in an equally sized previously encoded transform coefficient block.

17. Data stream according to claim 16, wherein the transform coefficient block relates to a depth map content.

18. Computer readable digital storage medium having stored thereon a computer program having a program code for performing, when running on a computer, a method according to claim 14 or 15.

Patentansprüche

1. Vorrichtung zum Decodieren eines Transformationskoeffizientenblocks, die folgende Merkmale aufweist:

einen Decodierer (250), der dazu konfiguriert ist, eine Signifikanzabbildung zu extrahieren, die Positionen signifikanter Transformationskoeffizienten in dem Transformationskoeffizientenblock angibt, und anschließend die Werte der signifikanten Transformationskoeffizienten in dem Transformationskoeffizientenblock aus einem Datenstrom zu extrahieren, wobei das Extrahieren der Werte der signifikanten Transformationskoeffizienten ein sequentielles Extrahieren der Werte anhand einer kontextadaptiven Entropiedecodierung umfasst; und
eine Zuordnungseinrichtung (252), die dazu konfiguriert ist, die sequenziell extrahierten Werte sequenziell den Positionen der signifikanten Transformationskoeffizienten in einer vorbestimmten Koeffizientenabtastreihenfol-

ge unter den Positionen des Transformationskoeffizientenblocks zuzuordnen,

dadurch gekennzeichnet, dass
der Transformationskoeffizientenblock in Teilblöcken (322) des Transformationskoeffizientenblocks (256) unter Verwendung einer Teilblockabtastreihenfolge (320) abgetastet wird, wobei zusätzlich die Positionen der Transformationskoeffizienten in den Teilblöcken in einer Positionsteilabtastreihenfolge (324) abgetastet werden,
wobei der Decodierer (250) dazu konfiguriert ist, beim sequenziellen kontextadaptierten Entropiedecodieren die Werte der signifikanten Transformationskoeffizientenwerte einen ausgewählten Satz einer Anzahl von Kontexten aus einer Mehrzahl von Sätzen einer Anzahl von Kontexten zu verwenden, wobei der Decodierer (250) derart konfiguriert ist, dass die Auswahl des ausgewählten Satzes, die für jeden Teilblock durchgeführt wird, von den Werten der Transformationskoeffizienten in einem Teilblock des Transformationskoeffizientenblocks abhängt, der bereits in der Teilblockabtastreihenfolge durchquert wurde, oder derart, dass die Auswahl des ausgewählten Satzes, die für jeden Teilblock durchgeführt wird, von den Werten der Transformationskoeffizienten eines an derselben Stelle angeordneten Teilblocks in einem zuvor decodierten Transformationskoeffizientenblock gleicher Größe abhängt.

2. Vorrichtung gemäß Anspruch 1, bei der der Decodierer derart konfiguriert ist, dass die Anzahl von Kontexten der Mehrzahl von Sätzen von Kontexten größer als eins ist, und dazu konfiguriert ist, beim sequenziellen kontextadaptierten Entropiedecodieren der Werte der signifikanten Transformationskoeffizientenwerte in einem Teilblock unter Verwendung des ausgewählten Satzes der Anzahl von Kontexten für den jeweiligen Teilblock die Kontexte des ausgewählten Satzes der Anzahl von Kontexten eindeutig den Positionen in dem jeweiligen Teilblock zuzuweisen.

3. Vorrichtung gemäß Anspruch 1 oder 2, bei der die Zuordnungseinrichtung (252) derart konfiguriert ist, dass die Teilblockabtastreihenfolge im Zickzack von einem Teilblock, der eine Position einer niedrigsten Frequenz in einer vertikalen Richtung und einer horizontalen Richtung umfasst, zu einem Teilblock führt, der eine Position einer höchsten Frequenz sowohl in der vertikalen als auch in der horizontalen Richtung umfasst, während die Positionsteilabtastreihenfolge in jedem Teilblock im Zickzack von einer Position in dem jeweiligen Teilblock, die auf eine höchste Frequenz in einer vertikalen Richtung und einer horizontalen Richtung bezogen ist, zu einer Position des jeweiligen Teilblocks, die auf eine niedrigste Frequenz sowohl in der vertikalen als auch in der horizontalen Richtung bezogen ist, führt.

4. Vorrichtung gemäß einem der Ansprüche 1 bis 3, bei der der Decodierer dazu konfiguriert ist, beim Extrahieren der Signifikanzabbildung aus dem Datenstrom
Syntaxelemente eines ersten Typs sequenziell aus dem Datenstrom zu extrahieren, wobei die Syntaxelemente des ersten Typs für zugeordnete Positionen in dem Transformationskoeffizientenblock (256) zumindest angeben, ob sich an der jeweiligen Position ein signifikanter oder insignifikanter Transformationskoeffizient befindet;
die Zuordnungseinrichtung (252) dazu konfiguriert ist, die sequenziell extrahierten Syntaxelemente des ersten Typs sequenziell den Positionen des Transformationskoeffizientenblocks in einer Abtastreihenfolge unter den Positionen des Transformationskoeffizientenblocks zuzuordnen, die von den Positionen der signifikanten Transformationskoeffizienten, die durch zuvor extrahierte und zugeordnete Syntaxelemente des ersten Typs angegeben sind, abhängt.

5. Vorrichtung gemäß Anspruch 4, bei der der Decodierer (250) ferner dazu konfiguriert ist, auf der Basis von Informationen in dem Datenstrom und unabhängig von einer Anzahl von Positionen der insignifikanten Transformationskoeffizienten, die durch die zuvor extrahierten und zugeordneten Syntaxelemente des ersten Typs angegeben sind, zu erkennen, ob sich an einer Position, der ein aktuell extrahiertes Syntaxelement des ersten Typs zugeordnet ist, das angibt, dass sich an dieser Position ein signifikanter Transformationskoeffizient befindet, ein letzter signifikanter Transformationskoeffizient in dem Transformationskoeffizientenblock befindet.

6. Vorrichtung gemäß Anspruch 4 oder 5, bei der der Decodierer (250) ferner dazu konfiguriert ist, zwischen Syntaxelementen des ersten Typs, die angeben, dass sich an der jeweiligen zugeordneten Position ein signifikanter Transformationskoeffizient befindet, und unmittelbar nachfolgenden Syntaxelementen des ersten Typs, Syntaxelementen eines zweiten Typs aus dem Bitstrom, die für die zugeordneten Positionen, an denen sich ein signifikanter Transformationskoeffizient befindet, angeben, ob die jeweilige zugeordnete Position der letzte signifikante Transformationskoeffizient in dem Transformationskoeffizientenblock ist.

7. Vorrichtung gemäß einem der Ansprüche 4 bis 6, bei der der Decodierer (250) ferner dazu konfiguriert ist, nach der Extraktion aller Syntaxelemente des ersten Typs des Transformationskoeffizientenblocks seriell Werte der signifikanten Transformationskoeffizienten in dem Transformationskoeffizientenblock aus dem Datenstrom anhand einer

kontextadaptiven Entropiedecodierung zu extrahieren, wobei die Zuordnungseinrichtung (252) dazu konfiguriert ist, die sequenziell extrahierten Werte sequenziell den Positionen der signifikanten Transformationskoeffizienten in einer vorbestimmten Koeffizientenabtastreihenfolge unter den Positionen des Transformationskoeffizientenblocks zuzuordnen, gemäß der der Transformationskoeffizientenblock in Teilblöcken (322) des Transformations-koeffizientenblocks (256) unter Verwendung einer Teilblockabtastreihenfolge (320) abgetastet wird, wobei zusätzlich die Positionen der Transformationskoeffizienten in den Teilblöcken (322) in einer Positionsteilabtastreihenfolge (324) abgetastet werden, wobei der Decodierer dazu konfiguriert ist, beim sequenziellen kontext-adaptierten Entropiedecodieren die Werte der signifikanten Transformations-koeffizientenwerte einen ausgewählten Satz einer Anzahl von Kontexten aus einer Mehrzahl von Sätzen einer Anzahl von Kontexten zu verwenden, wobei die Auswahl des ausgewählten Satzes, die für jeden Teilblock durchgeführt wird, von den Werten der Transformationskoeffizienten in einem Teilblock des Transformations-koeffizientenblocks, der bereits in der Teilblockabtastreihenfolge (320) durchquert wurde, oder den Werten der Transformationskoeffizienten eines an derselben Stelle angeordneten Teilblocks in einem zuvor decodierten Transformations-koeffizientenblock gleicher Größe abhängt.

8. Vorrichtung gemäß einem der Ansprüche 4 bis 7, bei der die Zuordnungseinrichtung (252) ferner dazu konfiguriert ist, die sequenziell extrahierten Syntaxelemente des ersten Typs sequenziell den Positionen des Transformationskoeffizientenblocks entlang einer Sequenz von Teilpfaden zuzuordnen, die sich zwischen einem ersten Paar benachbarter Seiten des Transformationskoeffizientenblocks, entlang dessen Positionen einer niedrigsten Frequenz in einer horizontalen Richtung und Positionen einer höchsten Frequenz in einer vertikalen Richtung positioniert sind, und einem zweiten Paar benachbarter Seiten des Transformationskoeffizientenblocks, entlang dessen Positionen einer niedrigsten Frequenz in der vertikalen Richtung und Positionen einer höchsten Frequenz in der horizontalen Richtung positioniert sind, erstrecken, wobei die Teilpfade einen zunehmenden Abstand von einer Position der niedrigsten Frequenz sowohl in der vertikalen als auch in der horizontalen Richtung aufweisen, und bei der die Zuordnungseinrichtung (252) dazu konfiguriert ist, eine Richtung (300, 302) zu bestimmen, entlang derer die sequenziell extrahierten Syntaxelemente des ersten Typs den Positionen des Transformationskoeffizientenblocks zugeordnet sind, auf der Basis der Positionen der signifikanten Transformationskoeffizienten in den vorherigen Teilabtastungen.

9. Vorrichtung gemäß einem der Ansprüche 1 bis 8, bei der
der Decodierer (250) dazu konfiguriert ist, beim Extrahieren der Signifikanzabbildung, die Positionen signifikanter Transformationskoeffizienten in dem Transformationskoeffizientenblock angibt, sequenziell Syntaxelemente des ersten Typs aus dem Datenstrom anhand einer kontextadaptiven Entropiedecodierung zu extrahieren, wobei die Syntaxelemente des ersten Typs für zugeordnete Positionen in dem Transformationskoeffizientenblock angeben, ob sich an der jeweiligen Position ein signifikanter oder insignifikanter Transformationskoeffizient befindet; und
die Zuordnungseinrichtung (250) dazu konfiguriert ist, die sequenziell extrahierten Syntaxelemente des ersten Typs sequenziell den Positionen des Transformationskoeffizientenblocks in der vorbestimmten Abtastreihenfolge unter den Positionen des Transformationskoeffizientenblocks zuzuordnen,
wobei der Decodierer dazu konfiguriert ist, beim kontextadaptiven Entropiedecodieren der Syntaxelemente des ersten Typs Kontexte, die einzeln für jedes der Syntaxelemente des ersten Typs ausgewählt werden, in Abhängigkeit von einer Anzahl von Positionen, an denen gemäß den zuvor extrahierten und zugeordneten Syntaxelementen des ersten Typs sich signifikante Transformationskoeffizienten befinden, in einer Nachbarschaft der Position, der ein aktuelles Syntaxelement vom ersten Typ zugeordnet ist, zu verwenden.

10. Vorrichtung gemäß Anspruch 9, bei der der Decodierer (250) ferner dazu konfiguriert ist, die Anzahl von Positionen, an denen sich gemäß den zuvor extrahierten und zugeordneten Syntaxelementen des ersten Typs signifikante Transformationskoeffizienten befinden, in der Nachbarschaft der Position, der das jeweilige Syntaxelement des ersten Typs zugeordnet ist, auf einen Kontextindex eines vorbestimmten Satzes möglicher Kontextindices unter Gewichtung mit einer Anzahl verfügbarer Positionen in der Nachbarschaft der Position, der das jeweilige Syntaxelement des ersten Typs zugeordnet ist, abzubilden.

11. Vorrichtung gemäß einem der Ansprüche 1 bis 10, bei der sich der Transformationskoeffizientenblock auf einen Tiefenabbildungsinhalt bezieht.

12. Vorrichtung zum Codieren eines Transformationskoeffizientenblocks, die dazu konfiguriert ist, eine Signifikanzabbildung, die Positionen von signifikanten Transformationskoeffizienten in dem Transformationskoeffizientenblock angibt, und anschließend die Werte der signifikanten Transformationskoeffizienten in dem Transformationskoeffizientenblock in einen Datenstrom zu codieren, wobei das Extrahieren der Werte der signifikanten Transformationskoeffizienten ein sequentielle Codieren der Werte anhand einer kontextadaptiven Entropiecodierung umfasst, wobei

die Vorrichtung dazu konfiguriert ist, die Werte in einer vorbestimmten Koeffizientenabtastreihenfolge unter den Positionen des Transformations-koeffizientenblocks in den Datenstrom zu codieren,
dadurch gekennzeichnet, dass
der Transformationskoeffizientenblock in Teilblöcken des Transformationskoeffizientenblocks unter Verwendung einer Teilblockabtastreihenfolge abgetastet wird, wobei zusätzlich die Positionen der Transformationskoeffizienten in den Teilblöcken in einer Positionsteilabtastreihenfolge abgetastet werden, wobei die Vorrichtung ferner dazu konfiguriert ist, beim sequenziellen kontext-adaptierten Entropiecodieren die Werte der signifikanten Transformationskoeffizientenwerte einen ausgewählten Satz einer Anzahl von Kontexten aus einer Mehrzahl von Sätzen einer Anzahl von Kontexten zu verwenden, wobei die Vorrichtung derart konfiguriert ist, dass die Auswahl des ausgewählten Satzes, die für jeden Teilblock durchgeführt wird, von den Werten der Transformationskoeffizienten in einem Teilblock des Transformationskoeffizientenblocks abhängt, der bereits in der Teilblockabtastreihenfolge durchquert wurde, oder derart, dass die Auswahl des ausgewählten Satzes, die für jeden Teilblock durchgeführt wird, von den Werten der Transformationskoeffizienten eines an derselben Stelle angeordneten Teilblocks in einem zuvor codierten Transformationskoeffizientenblock gleicher Größe abhängt.

13. Vorrichtung gemäß Anspruch 12, bei der sich der Transformationskoeffizientenblock auf einen Tiefenabbildungsinhalt bezieht.

14. Verfahren zum Decodieren eines Transformationskoeffizientenblocks, das folgende Schritte aufweist:

Extrahieren einer Signifikanzabbildung, die Positionen signifikanter Transformationskoeffizienten in dem Transformationskoeffizientenblock angibt, und anschließend der Werte der signifikanten Transformationskoeffizienten in dem Transformationskoeffizientenblock aus einem Datenstrom, wobei das Extrahieren der Werte der signifikanten Transformationskoeffizienten ein sequentielles Extrahieren der Werte anhand einer kontextadaptiven Entropiedecodierung umfasst; und
sequenzielles Zuordnen der sequenziell extrahierten Werte den Positionen der signifikanten Transformationskoeffizienten in einer vorbestimmten Koeffizientenabtastreihenfolge unter den Positionen des Transformationskoeffizientenblocks,

dadurch gekennzeichnet, dass
der Transformationskoeffizientenblock in Teilblöcken des Transformationskoeffizienten-blocks unter Verwendung einer Teilblockabtastreihenfolge abgetastet wird, wobei zusätzlich die Positionen der Transformationskoeffizienten in den Teilblöcken in einer Positionsteilabtastreihenfolge abgetastet werden,
wobei beim sequenziellen kontext-adaptierten Entropiedecodieren die Werte der signifikanten Transformationskoeffizientenwerte ein ausgewählter Satz einer Anzahl von Kontexten aus einer Mehrzahl von Sätzen einer Anzahl von Kontexten verwendet wird, wobei die Auswahl des ausgewählten Satzes, die für jeden Teilblock durchgeführt wird, von den Werten der Transformationskoeffizienten in einem Teilblock des Transformationskoeffizientenblocks abhängt, der bereits in der Teilblockabtastreihenfolge durchquert wurde, oder die Auswahl des ausgewählten Satzes, die für jeden Teilblock durchgeführt wird, von den Werten der Transformationskoeffizienten eines an derselben Stelle angeordneten Teilblocks in einem zuvor decodierten Transformationskoeffizientenblock gleicher Größe abhängt.

15. Verfahren zum Codieren eines Transformationskoeffizientenblocks, das folgende Schritte aufweist:

Codieren einer Signifikanzabbildung, die Positionen signifikanter Transformationskoeffizienten in dem Transformationskoeffizientenblock angibt, und anschließend der Werte der signifikanten Transformationskoeffizienten in dem Transformationskoeffizientenblock in einen Datenstrom, wobei das Codieren der Werte der signifikanten Transformationskoeffizienten ein sequentielles Codieren der Werte anhand einer kontextadaptiven Entropiecodierung umfasst, wobei das Codieren der Werte in den Datenstrom in einer vorbestimmten Koeffizientenabtastreihenfolge unter den Positionen des Transformationskoeffizienten-blocks durchgeführt wird,
dadurch gekennzeichnet, dass
der Transformationskoeffizientenblock in Teilblöcken des Transformationskoeffizienten-blocks unter Verwendung einer Teilblockabtastreihenfolge abgetastet wird, wobei zusätzlich die Positionen der Transformationskoeffizienten in den Teilblöcken in einer Positionsteilabtastreihenfolge abgetastet werden, wobei beim sequenziellen kontext-adaptierten Entropiecodieren die Werte der signifikanten Transformationskoeffizientenwerte ein ausgewählter Satz einer Anzahl von Kontexten aus einer Mehrzahl von Sätzen einer Anzahl von Kontexten verwendet wird, wobei die Auswahl des ausgewählten Satzes, die für jeden Teilblock durchgeführt wird, von den Werten der Transformationskoeffizienten in einem Teilblock des Transformationskoeffizientenblocks ab-

hängt, der bereits in der Teilblockabtastreihenfolge durchquert wurde, oder die Auswahl des ausgewählten Satzes, die für jeden Teilblock durchgeführt wird, von den Werten der Transformationskoeffizienten eines an derselben Stelle angeordneten Teilblocks in einem zuvor codierten Transformationskoeffizientenblock gleicher Größe abhängt.

16. Datenstrom, der eine Codierung einer Signifikanzabbildung, die Positionen signifikanter Transformationskoeffizienten in dem Transformationskoeffizientenblock angibt, gefolgt von den Werten der signifikanten Transformationskoeffizienten in dem Transformationskoeffizientenblock, aufweist, wobei die Werte der signifikanten Transformationskoeffizienten anhand einer kontextadaptiven Entropiecodierung in einer vorbestimmten Koeffizientenabtastreihenfolge unter den Positionen des Transformationskoeffizientenblocks sequenziell in den Datenstrom codiert werden, **dadurch gekennzeichnet, dass**
der Transformationskoeffizientenblock in Teilblöcken des Transformationskoeffizientenblocks unter Verwendung einer Teilblockabtastreihenfolge abgetastet wird, wobei zusätzlich die Positionen der Transformationskoeffizienten in den Teilblöcken in einer Positionsteilabtastreihenfolge abgetastet werden, wobei die Werte der signifikanten Transformationskoeffizientenwerte unter Verwendung eines ausgewählten Satzes einer Anzahl von Kontexten aus einer Mehrzahl von Sätzen einer Anzahl von Kontexten sequenziell kontextadaptiert in den Datenstrom entropiecodiert werden, wobei die Auswahl des ausgewählten Satzes, die für jeden Teilblock durchgeführt wird, von den Werten der Transformationskoeffizienten in einem Teilblock des Transfiormationskoeffizientenblocks abhängt, der bereits in der Teilblockabtastreihenfolge durchquert wurde, oder die Auswahl des ausgewählten Satzes, die für jeden Teilblock durchgeführt wird, von den Werten der Transformationskoeffizienten eines an derselben Stelle angeordneten Teilblocks in einem zuvor codierten Transformationskoeffizientenblock gleicher Größe abhängt.

17. Datenstrom gemäß Anspruch 16, bei dem sich der Transformationskoeffizientenblock auf einen Tiefenabbildungsinhalt bezieht.

18. Computerlesbares digitales Speichermedium, auf dem ein Computerprogramm gespeichert ist, das einen Programmcode zum Durchführen, wenn es auf einem Computer abläuft, eines Verfahrens gemäß Anspruch 14 oder 15 aufweist.

Revendications

1. Appareil de décodage d'un bloc de coefficients de transformée, comprenant:

un décodeur (250) configuré pour extraire une carte d'importances indiquant les positions de coefficients de transformée significatifs dans le bloc de coefficients de transformée, et ensuite les valeurs des coefficients de transformée significatifs dans le bloc de coefficients de transformée à partir d'un flux de données, l'extraction des valeurs des coefficients de transformée significatifs comprenant l'extraction séquentielle des valeurs par décodage entropique adaptatif au contexte; et
un associateur (252) configuré pour associer séquentiellement les valeurs extraites séquentiellement aux positions des coefficients de transformée significatifs dans un ordre de balayage de coefficients prédéterminé parmi les positions du bloc de coefficients de transformée,

caractérisé par le fait que
le bloc de coefficients de transformée est balayé en sous-blocs (322) du bloc de coefficients de transformée (256) à l'aide d'un ordre de balayage de sous-blocs (320) en balayant subsidiairement les positions des coefficients de transformée dans les sous-blocs dans un ordre de sous-balayage de positions (324),
dans lequel le décodeur (250) est configuré pour utiliser, lors du décodage entropique adapté au contexte séquentiel des valeurs de coefficients de transformée significatifs, un ensemble sélectionné d'un nombre de contextes parmi une pluralité d'ensembles d'un nombre de contextes, dans lequel le décodeur (250) est configuré de sorte que la sélection de l'ensemble sélectionné effectuée pour chaque sous-bloc dépende des valeurs des coefficients de transformée dans un sous-bloc du bloc de coefficients de transformée ayant déjà été parcouru dans l'ordre de balayage de sous-bloc, ou de sorte que la sélection de l'ensemble sélectionné effectuée pour chaque sous-bloc dépende des valeurs des coefficients de transformée d'un sous-bloc co-localisé dans un bloc de coefficients de transformée décodé auparavant de même grandeur.

2. Appareil selon la revendication 1, dans lequel le décodeur est configuré de sorte que le nombre de contextes de la pluralité d'ensembles de contextes soit supérieur à un, et est configuré pour attribuer, lors du décodage entropique

adapté au contexte séquentiel des valeurs de coefficients de transformée significatifs dans un sous-bloc à l'aide de l'ensemble sélectionné du nombre de contextes pour le sous-bloc respectif, uniquement les contextes de l'ensemble sélectionné du nombre de contextes aux positions dans le sous-bloc respectif.

3. Appareil selon la revendication 1 ou 2, dans lequel l'associateur (252) est configuré de sorte que l'ordre de balayage de sous-blocs conduise en zigzag d'un sous-bloc comportant une position d'une fréquence la plus basse dans une direction verticale et une direction horizontale à un sous-bloc comportant une position d'une fréquence la plus haute dans les directions verticale et horizontale, tandis que l'ordre de sous-balayage de positions conduise, dans chaque sous-bloc, en zigzag d'une position dans le sous-bloc respectif relative à la fréquence la plus élevée dans une direction verticale et une direction horizontale à une position du sous-bloc respectif relative à une fréquence la plus basse dans les directions verticale et horizontale.

4. Appareil selon l'une quelconque des revendications 1 à 3, dans lequel le décodeur est configuré pour, lors de l'extraction de la carte d'importances du flux de données,
extraire séquentiellement les éléments de syntaxe du premier type du flux de données, les éléments de syntaxe du premier type indiquant, pour les positions associées dans le bloc de coefficients de transformée (256), au moins si à la position respective est situé un coefficient de transformée significatif ou non significatif;
l'associateur (252) est configuré pour associer séquentiellement les éléments de syntaxe du premier type extraits séquentiellement aux positions du bloc de coefficient de transformée dans un ordre de balayage parmi les positions du bloc de coefficients de transformée qui dépend des positions des coefficients de transformée significatifs indiqués par les éléments de syntaxe du premier type extraits et associés auparavant.

5. Appareil selon la revendication 4, dans lequel le décodeur (250) est par ailleurs configuré pour reconnaître, sur base d'une information dans le flux de données, et indépendamment d'un nombre de positions des coefficients de transformée non significatifs indiqués par les éléments de syntaxe du premier type extraits et associés auparavant, si à une position à laquelle est associé un élément de syntaxe du premier type actuellement extrait, ce qui indique qu'à cette position est situé un coefficient de transformée significatif, est situé un dernier coefficient de transformée significatif dans le bloc de coefficients de transformée.

6. Appareil selon la revendication 4 ou 5, dans lequel le décodeur (250) est par ailleurs configuré pour extraire, entre les éléments de syntaxe du premier type indiquant qu'à la position associée respective est situé un coefficient de transformée significatif, et les éléments de syntaxe du premier type immédiatement suivants, les éléments de syntaxe du deuxième type du flux de bits indiquant, pour les positions associées auxquelles est situé un coefficient de transformée significatif, si la position associée respective est le dernier coefficient de transformée significatif dans le bloc de coefficients de transformée.

7. Appareil selon l'une quelconque des revendications 4 à 6, dans lequel le décodeur (250) est par ailleurs configuré pour extraire en série, après extraction de tous les éléments de syntaxe du premier type du bloc de coefficients de transformée, les valeurs des coefficients de transformée significatifs dans le bloc de coefficients de transformée du flux de données par décodage entropique adaptatif au contexte, dans lequel l'associateur (252) est configuré pour associer séquentiellement les valeurs extraites séquentiellement aux positions des coefficients de transformée significatifs dans un ordre de balayage de coefficients prédéterminé parmi les positions du bloc de coefficients de transformée selon lequel le bloc de coefficients de transformée est balayé en sous-blocs (322) du bloc de coefficients de transformée (256) à l'aide d'un ordre de balayage de sous-blocs (320) en balayant subsidiairement les positions des coefficients de transformée dans les sous-blocs (322) dans un ordre de sous-balayage de positions (324), dans lequel le décodeur est configuré pour utiliser, lors du décodage entropique adapté au contexte séquentiel des valeurs de coefficients de transformée significatifs, un ensemble sélectionné d'un nombre de contextes parmi une pluralité d'ensembles d'un nombre de contextes, la sélection de l'ensemble sélectionné effectuée pour chaque sous-bloc en fonction des valeurs des coefficients de transformée dans un sous-bloc du bloc de coefficients de transformée ayant déjà été parcouru dans l'ordre de balayage de sous-blocs (320), ou les valeurs des coefficients de transformée d'un sous-bloc co-localisé dans un bloc de coefficients de transformée décodé auparavant de même grandeur.

8. Appareil selon l'une quelconque des revendications 4 à 7, dans lequel l'associateur (252) est par ailleurs configuré pour associer séquentiellement les éléments de syntaxe du premier type extraits séquentiellement aux positions du bloc de coefficients de transformée le long d'une séquence de sous-trajets s'étendant entre une première paire de côtés adjacents du bloc de coefficients de transformée le long desquels sont positionnées respectivement les positions d'une fréquence la plus basse dans une direction horizontale et des positions d'une fréquence la plus haute dans une direction verticale et une deuxième paire de côtés adjacents du bloc de coefficients de transformée

le long desquels sont positionnées les positions de la fréquence la plus basse dans la direction verticale et les positions de la fréquence la plus haute dans la direction horizontale, les sous-trajets présentant une distance croissante par rapport à une position de la fréquence la plus basse dans les directions verticale et horizontale, et dans lequel l'associateur (252) est configuré pour déterminer une direction (300, 302) le long de laquelle les éléments de syntaxe du premier type extraits séquentiellement sont associés aux positions du bloc de coefficients de transformée, sur base des positions des coefficients de transformée significatifs dans les sous-balayages précédents.

9. Appareil selon l'une quelconque des revendications 1 à 8, dans lequel
le décodeur (250) est configuré pour extraire séquentiellement, lors de l'extraction de la carte d'importances indiquant les positions des coefficients de transformée significatifs dans le bloc de coefficient de transformée, les éléments de syntaxe du premier type du flux de données par décodage entropique adaptatif au contexte, les éléments de syntaxe du premier type indiquant, pour les positions associées dans le bloc de coefficients de transformée, si à la position respective est situé un coefficient de transformée significatif ou non significatif; et
l'associateur (250) est configuré pour associer séquentiellement les éléments de syntaxe du premier type extraits séquentiellement aux positions du bloc de coefficients de transformée dans l'ordre de balayage prédéterminé parmi les positions du bloc de coefficients de transformée,
dans lequel le décodeur est configuré pour utiliser, lors du décodage entropique adaptatif au contexte des éléments de syntaxe du premier type, les contextes qui sont sélectionnés individuellement pour chacun des éléments de syntaxe du premier type en fonction d'un nombre de positions auxquelles sont situés, selon les éléments de syntaxe du premier type extraits et associés auparavant, les coefficients de transformée significatifs, dans un voisinage de la position à laquelle est associé un élément de syntaxe du premier type actuel.

10. Appareil selon la revendication 9, dans lequel le décodeur (250) est par ailleurs configuré pour mapper le nombre de positions auxquelles sont situés, en fonction des éléments de syntaxe du premier type extraits et associés auparavant, des coefficients de transformée significatifs, au voisinage de la position à laquelle est associé l'élément de syntaxe du premier type respectif, à un indice de contexte d'un ensemble prédéterminé d'indices de contexte possibles tout en pondérant avec un nombre de positions disponibles au voisinage de la position à laquelle est associé l'élément de syntaxe du premier type respectif.

11. Appareil selon l'une quelconque des revendications 1 à 10, dans lequel le bloc de coefficients de transformée se rapporte à un contenu de carte de profondeur.

12. Appareil pour coder un bloc de coefficients de transformée, configuré pour coder une carte d'importances indiquant les positions de coefficients de transformée significatifs dans le bloc de coefficients de transformée, et ensuite les valeurs des coefficients de transformée significatifs dans le bloc de coefficients de transformée dans un flux de données, l'extraction des valeurs des coefficients de transformée significatifs comprenant le codage séquentiel des valeurs par codage entropique adaptatif au contexte, dans lequel l'appareil est configuré pour coder les valeurs dans le flux de données dans un ordre de balayage de coefficients prédéterminé parmi les positions du bloc de coefficients de transformée,
caractérisé par le fait que
le bloc de coefficients de transformée est balayé en sous-blocs du bloc de coefficients de transformée à l'aide d'un ordre de balayage de sous-blocs en balayant subsidiairement les positions des coefficients de transformée dans les sous-blocs dans un ordre de sous-balayage de positions, dans lequel l'appareil est par ailleurs configuré pour utiliser, lors du codage entropique adapté au contexte séquentiel des valeurs de coefficients de transformée significatifs, un ensemble sélectionné d'un nombre de contextes parmi une pluralité d'ensembles d'un nombre de contextes, dans lequel l'appareil est configuré de sorte que la sélection de l'ensemble sélectionné effectuée pour chaque sous-bloc dépende des valeurs des coefficients de transformée dans un sous-bloc du bloc de coefficients de transformée ayant déjà été parcouru dans l'ordre de balayage de sous-blocs, ou de sorte que la sélection de l'ensemble sélectionné effectuée pour chaque sous-bloc dépende des valeurs des coefficients de transformée d'un sous-bloc co-localisé dans un bloc de coefficients de transformée codé auparavant de même grandeur.

13. Appareil selon la revendication 12, dans lequel le bloc de coefficients de transformée se rapporte à un contenu de carte de profondeurs.

14. Procédé de décodage d'un bloc de coefficients de transformée, comprenant le fait de:

extraire une carte d'importances indiquant les positions de coefficients de transformée significatifs dans le bloc de coefficients de transformée, et ensuite les valeurs des coefficients de transformée significatifs dans le bloc

de coefficients de transformée d'un flux de données, l'extraction des valeurs des coefficients de transformée significatifs comprenant l'extraction séquentielle des valeurs par décodage entropique adaptatif au contexte; et associer séquentiellement les valeurs extraites séquentiellement aux positions des coefficients de transformée significatifs dans un ordre de balayage de coefficients prédéterminé parmi les positions du bloc de coefficients de transformée,

caractérisé par le fait que
le bloc de coefficients de transformée est balayé en sous-blocs du bloc de coefficients de transformée à l'aide d'un ordre de balayage de sous-blocs en balayant subsidiairement les positions des coefficients de transformée dans les sous-blocs dans un ordre de sous-balayage de positions,
dans lequel, lors du décodage entropique adapté au contexte séquentiel des valeurs de coefficients de transformée significatifs est utilisé un ensemble sélectionné d'un nombre de contextes parmi une pluralité d'ensembles d'un nombre de contextes, la sélection de l'ensemble sélectionné est effectuée pour chaque sous-bloc en fonction des valeurs des coefficients de transformée dans un sous-bloc du bloc de coefficients de transformée ayant déjà été parcouru dans l'ordre de balayage de sous-blocs, ou la sélection de l'ensemble sélectionné est effectuée pour chaque sous-bloc en fonction des valeurs des coefficients de transformée d'un sous-bloc co-localisé dans un bloc de coefficients de transformée décodé auparavant de même grandeur.

15. Procédé de codage d'un bloc de coefficients de transformée, comprenant le fait de
coder une carte d'importances indiquant les positions de coefficients de transformée significatifs dans le bloc de coefficients de transformée, et ensuite les valeurs des coefficients de transformée significatifs dans le bloc de coefficients de transformée dans un flux de données, le codage des valeurs des coefficients de transformée significatifs comprenant le codage séquentiel des valeurs par codage entropique adaptatif au contexte, où le codage des valeurs dans le flux de données est effectué dans un ordre de balayage de coefficients prédéterminé parmi les positions du bloc de coefficients de transformée,
caractérisé par le fait que
le bloc de coefficients de transformée est balayé en sous-blocs du bloc de coefficients de transformée à l'aide d'un ordre de balayage de sous-blocs en balayant subsidiairement les positions des coefficients de transformée dans les sous-blocs dans un ordre de sous-balayage de positions, où lors du codage entropique adapté au contexte des valeurs de coefficients de transformée significatifs est utilisé un ensemble sélectionné d'un nombre de contextes parmi une pluralité d'ensembles d'un nombre de contextes, la sélection de l'ensemble sélectionné étant effectuée pour chaque sous-bloc en fonction des valeurs des coefficients de transformée dans un sous-bloc du bloc de coefficients de transformée ayant déjà été parcouru dans l'ordre de balayage de sous-blocs, ou la sélection de l'ensemble sélectionné étant effectuée pour chaque sous-bloc en fonction des valeurs des coefficients de transformée d'un sous-bloc co-localisé dans un bloc de coefficients de transformée codé auparavant de même grandeur.

16. Flux de données comprenant un codage d'une carte d'importances indiquant les positions des coefficients de transformée significatifs dans le bloc de coefficients de transformée, suivies des valeurs des coefficients de transformée significatifs dans le bloc de coefficients de transformée, dans lequel les valeurs des coefficients de transformée significatifs sont codées séquentiellement dans le flux de données par codage entropique adaptatif au contexte dans un ordre de balayage de coefficients prédéterminé parmi les positions du bloc de coefficients de transformée,
caractérisé par le fait que
le bloc de coefficients de transformée est balayé en sous-blocs du bloc de coefficients de transformée à l'aide d'un ordre de balayage de sous-blocs en balayant subsidiairement les positions des coefficients de transformée dans les sous-blocs dans un ordre de sous-balayage de positions, où les valeurs des coefficients de transformée significatifs sont codées séquentiellement, de manière entropique adaptée au contexte, dans le flux de données à l'aide d'un ensemble sélectionné d'un nombre de contextes parmi une pluralité d'ensembles d'un nombre de contextes, la sélection de l'ensemble sélectionné étant effectuée pour chaque sous-bloc en fonction des valeurs des coefficients de transformée dans un sous-bloc du bloc de coefficients de transformée ayant déjà été parcouru dans l'ordre de balayage des sous-blocs, ou la sélection de l'ensemble sélectionné étant effectuée pour chaque sous-bloc en fonction des valeurs des coefficients de transformée d'un sous-bloc co-localisé dans un bloc de coefficient de transformée codé auparavant de même grandeur.

17. Flux de données selon la revendication 16, dans lequel le bloc de coefficients de transformée se rapporte à un contenu de carte de profondeurs.

18. Support de mémoire numérique lisible par ordinateur présentant, y mémorisé, un programme d'ordinateur présentant

un code de programme pour réaliser, lorsqu'il est exécuté sur un ordinateur, un procédé selon la revendication 14 ou 15.

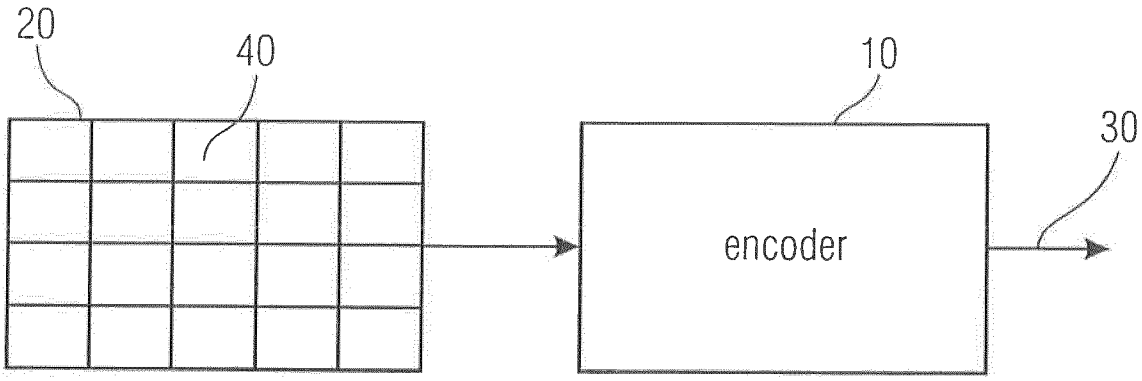

FIG 1

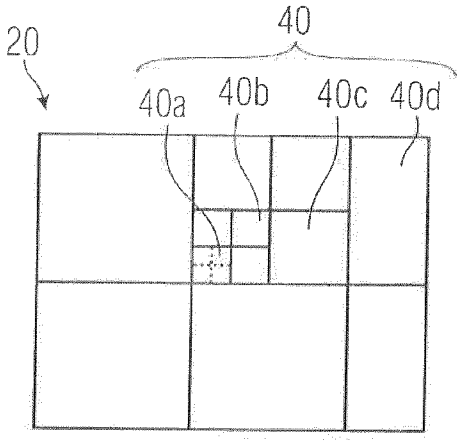

FIG 2A

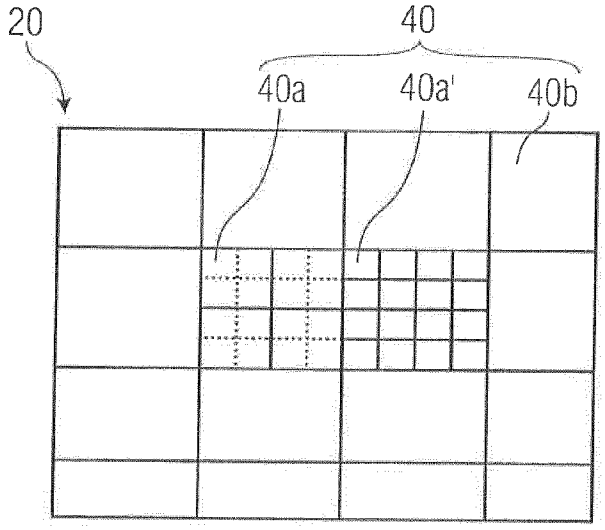

FIG 2B

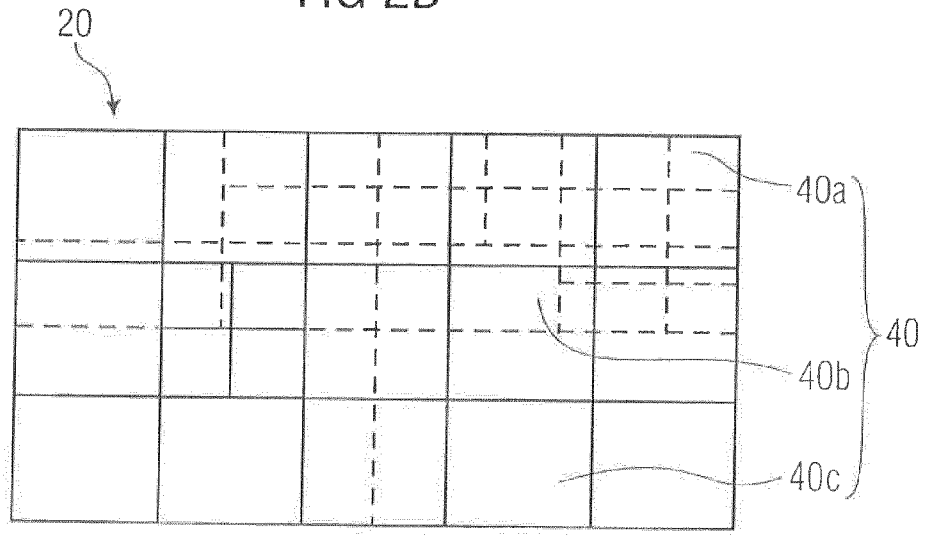

FIG 2C

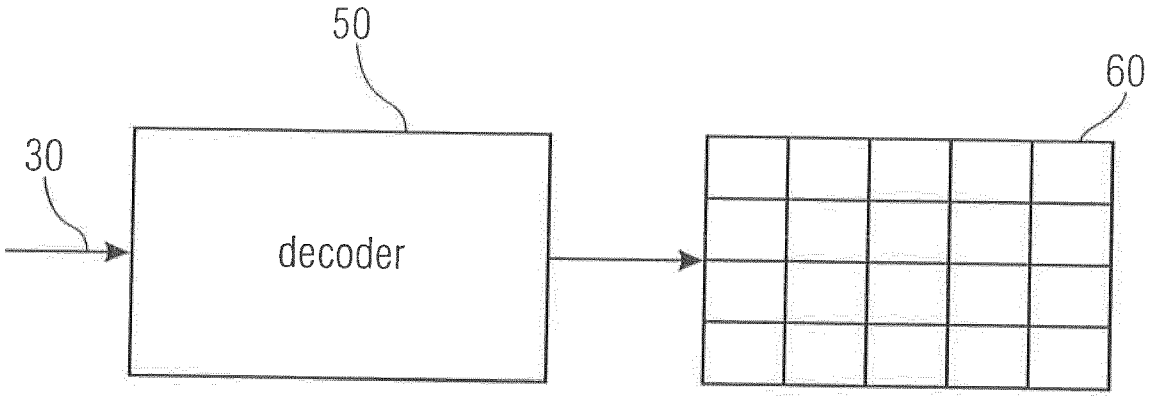

FIG 3

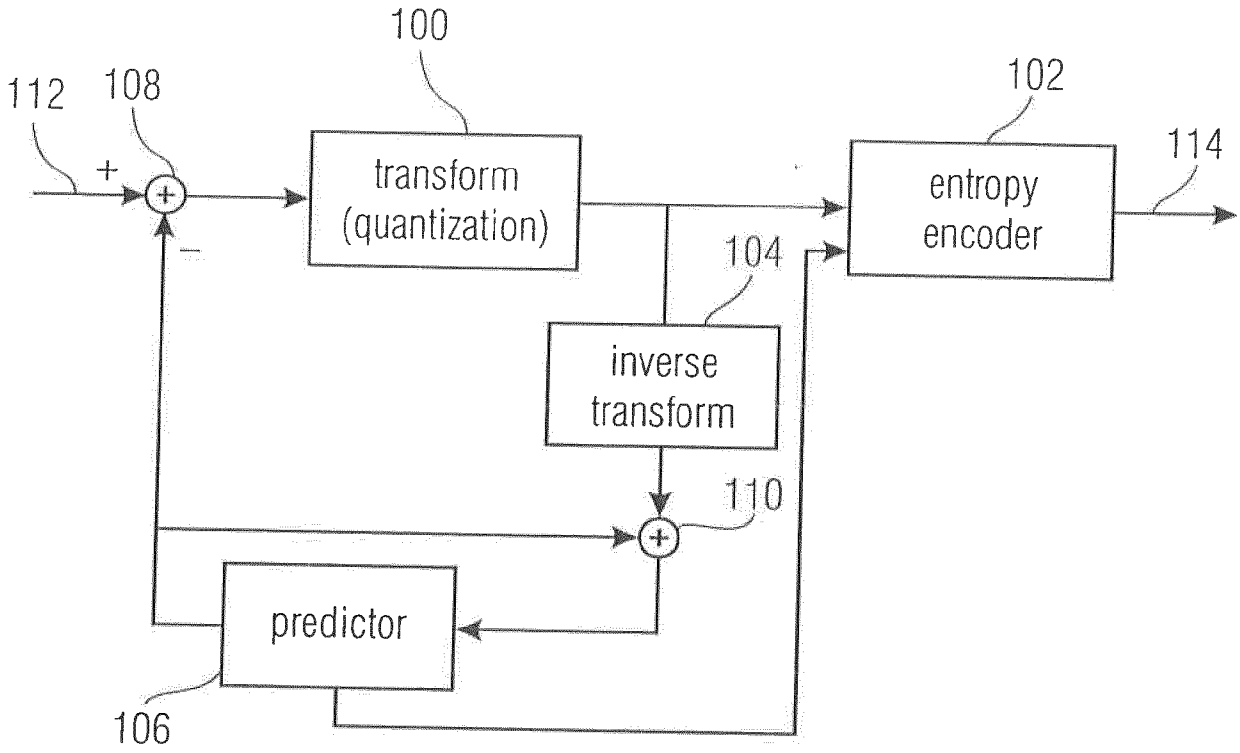
100
112
108
102
114
+
transform
(quantization)
entropy
encoder
−
104
inverse
transform
110
predictor
106

FIG 4

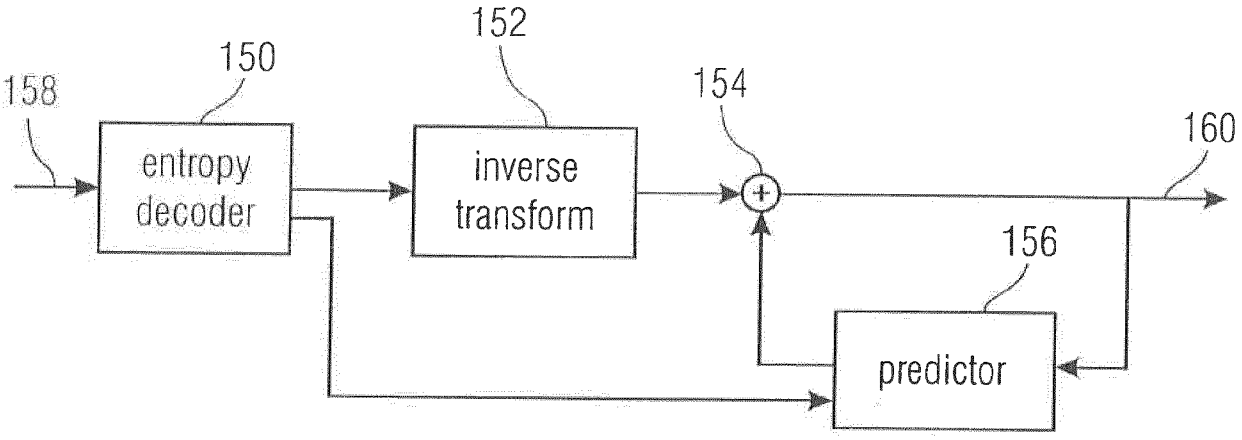
158
150
entropy decoder
152
inverse transform
154
160
156
predictor

FIG 5

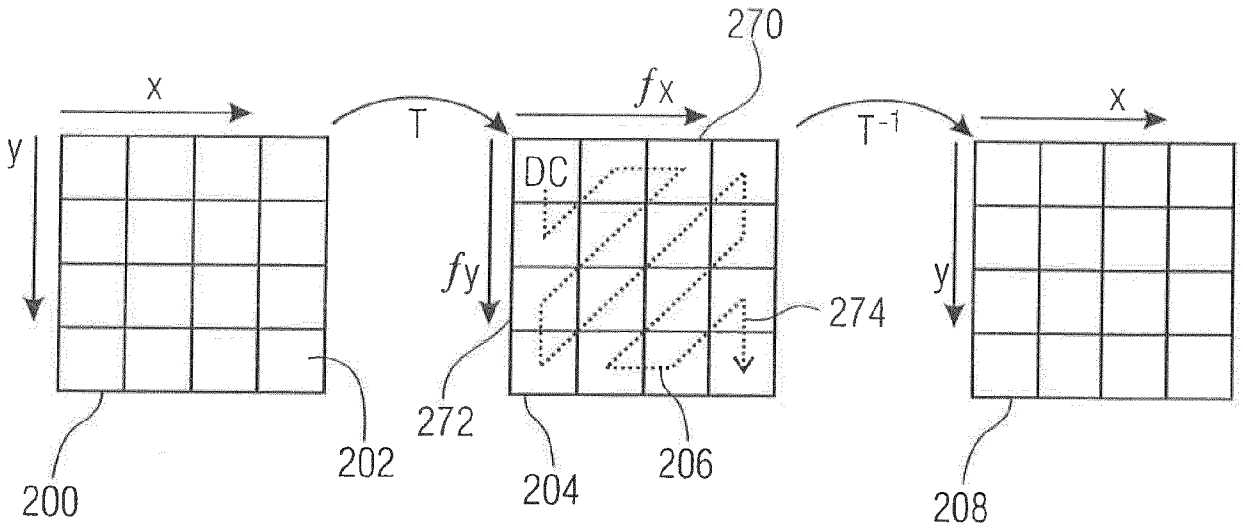

FIG 6

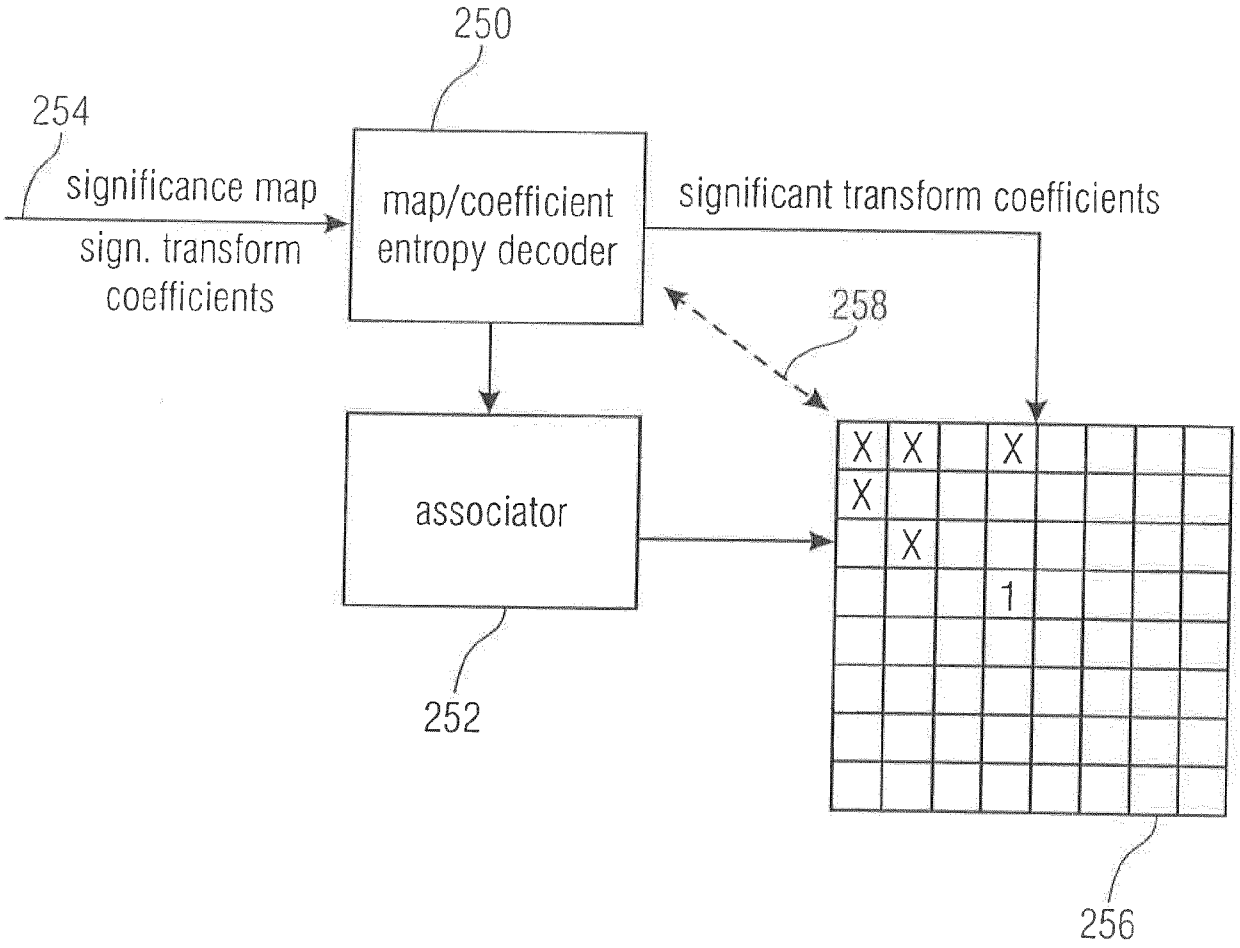
250
254
significance map
sign. transform coefficients
map/coefficient entropy decoder
significant transform coefficients
258
associator
252
256

FIG 7

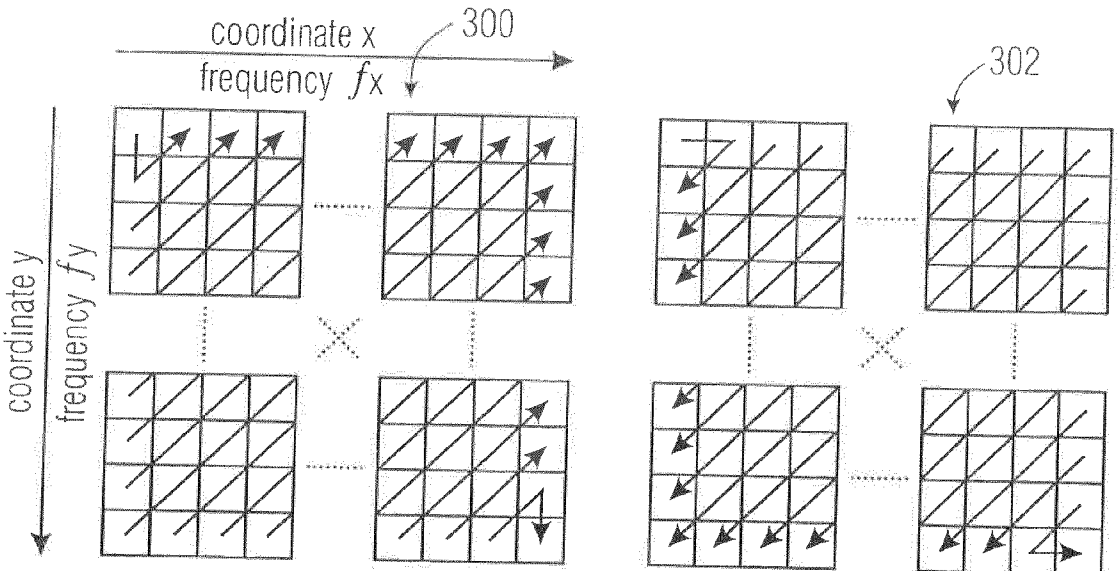

FIG 8

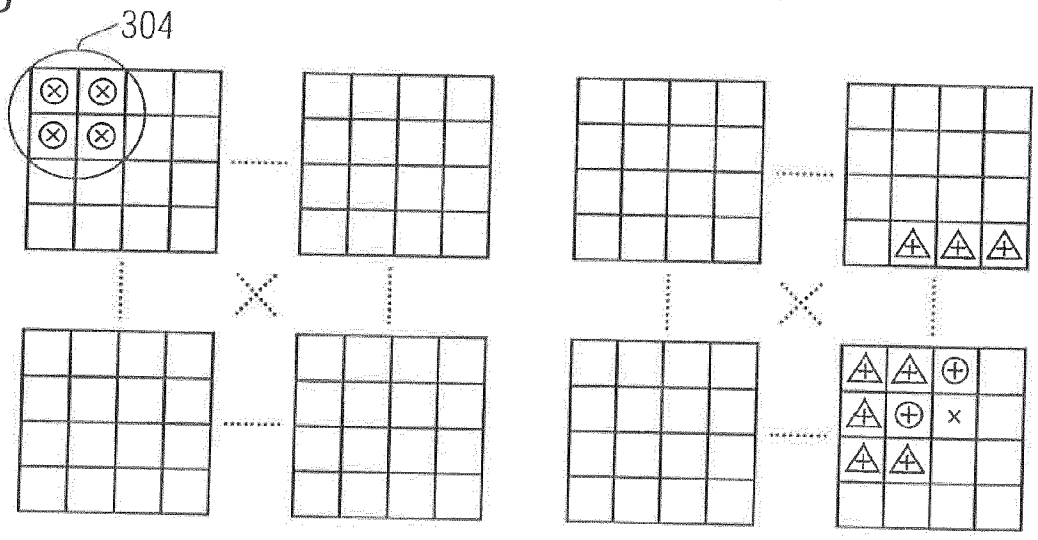

FIG 9

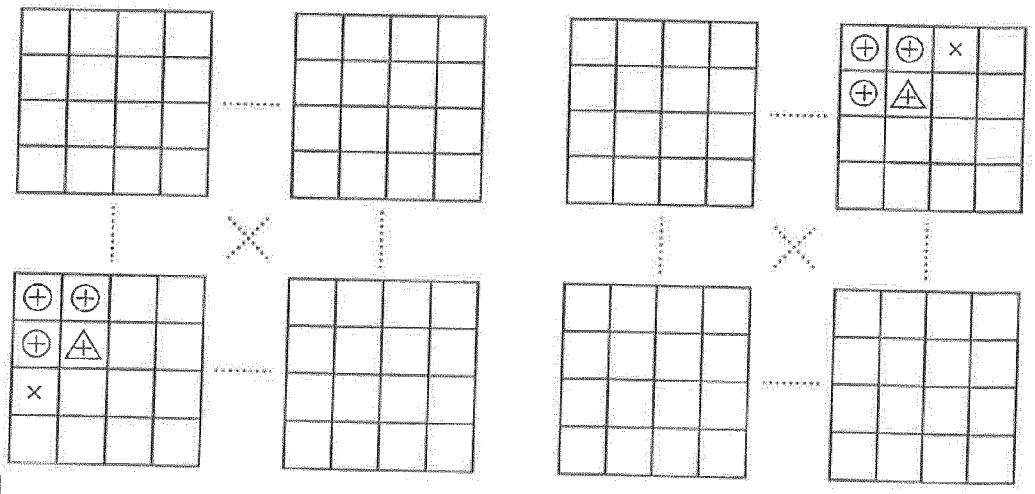

FIG 10

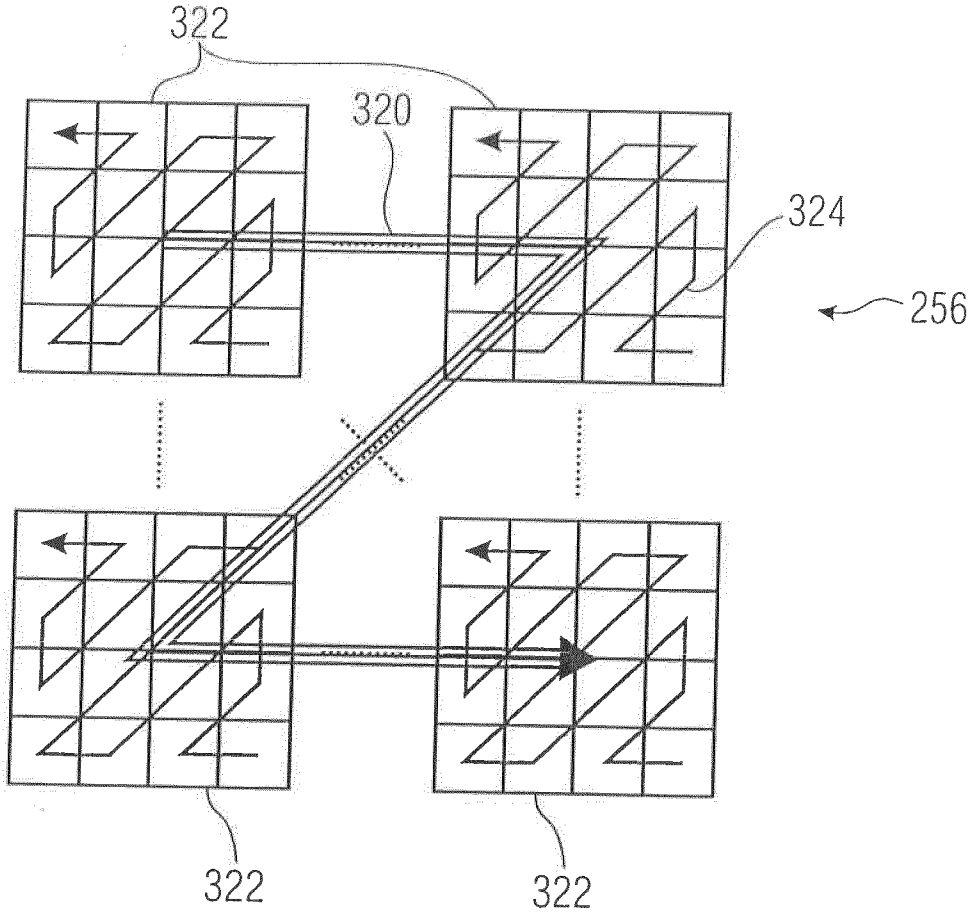

FIG 11

REFERENCES CITED IN THE DESCRIPTION

This list of references cited by the applicant is for the reader's convenience only. It does not form part of the European patent document. Even though great care has been taken in compiling the references, errors or omissions cannot be excluded and the EPO disclaims all liability in this regard.

Patent documents cited in the description

- EP 1487113 A2 **[0013]**
- EP 1768415 A1 **[0014]**
- US 2003128753 A1 **[0015]**
- GB 2264605 A **[0016]**

Non-patent literature cited in the description

- Compression of Sparse Matrices by Arithmetic Coding. **BELL T. et al.** PROCEEDINGS OF THE DATA COMPRESSION CONFERENCE. IEEE, 30 March 1998, 23-32 **[0017]**
- **SALOMON D. et al.** Data Compression: The Complete Reference (passage). Springer, 1998, 69-84 **[0018]**
- Context-based Arithmetic Coding Reexamined for DCT Video Compression. **ZHANG L. et al.** PROCEEDINGS OF THE 2007 IEEE INTERNATIONAL SYMPOSIUM ON CIRCUITS AND SYSTEMS (ICASP 2007). IEEE, 01 May 2007, 3147-3150 **[0019]**
- An overview of the basic principles of the Q-Coder adaptive binary arithmetic coder. **PENNEBAKER W. B. et al.** IBM JOURNAL OF RESEARCH AND DEVELOPMENT. IBM Corporation, November 1988, vol. 32, 717-726 **[0020]**
- Context-based Artithmetic Encoding of 2D Shape Sequences. **BRADY N. et al.** PROCEEDINGS OF THE IEEE INTERNATIONAL CONFERENCE ON IMAGE PROCESSING (ICIP 1997). IEEE, 26 October 1997, vol. 1, 29-32 **[0021]**
- Context-based adaptive binary arithmetic coding in JVT/H.26L. **MARPE D. et al.** PROCEEDINGS OF THE IEEE INTERNATIONAL CONFERENCE ON IMAGE PROCESSING (ICIP 2002). IEEE, 22 September 2002, vol. 2, 513-516 **[0022]**

Szignifikancia térképek és transzformációs együttható blokkok kódolása

SZTNH-100010338

Szabadalmi igénypontok

1. Berendezés egy transzformációs együttható blokk dekódolására, amely tartalmaz:

egy dekódolót (250), amely úgy van konfigurálva, hogy kivonjon egy a transzformációs együttható blokkon belül szignifikáns transzformációs együtthatók pozícióját jelző szignifikancia térképet, és azután a transzformációs együttható blokkon belüli szignifikancia transzformációs együtthatók értékeit egy adatfolyamból, a szignifikancia transzformációs együtthatók értékeinek kivonása során az értékek kontextushoz alkalmazkodó entrópia dekódolás útján történő szekvenciális kivonásával; és

egy társítót (252), amely úgy van konfigurálva, hogy szekvenciálisan társítsa a szekvenciálisan kivont értékeket a szignifikáns transzformációs együtthatók pozícióival egy előre meghatározott együttható letapogatási sorrendben a transzformációs együttható blokk pozíciók között, azzal jellemezve, hogy a transzformációs együttható blokk letapogatása a transzformációs együttható blokk (256) al-blokkjaiban (322) történik egy al-blokk letapogatási sorrend (320) használatával és járulékosan a transzformációs együttható al-blokkokon belüli pozícióinak egy pozíció al-letapogatási sorrendben (324) történő letapogatásával,

ahol a dekódoló (250) úgy van konfigurálva, hogy a szignifikáns transzformációs együttható értékek értékeinek szekvenciális kontextushoz alkalmazkodó entrópia dekódolása során egy a kontextusok számainak készleteiből kiválasztott kontextus szám készletet használjon, ahol a dekódoló (250) úgy van konfigurálva, hogy a minden egyes al-blokk vonatkozásában végrehajtásra kerülő kiválasztott készlet kiválasztása a transzformációs együttható blokk egy alblokkján belüli, az al-blokk letapogatási sorrendbe már átforgatott transzformációs együtthatók értékeitől függ, vagy úgy van konfigurálva, hogy a minden egyes al-blokk vonatkozásában végrehajtásra kerülő kiválasztott készlet kiválasztása egy ugyanott elhelyezkedő al-blokk transzformációs együtthatóinak az értékeitől függ egy azonosan méretezett előzőleg dekódolt transzformációs együttható blokkban.

2. Az 1. igénypont szerint berendezés, ahol a dekódoló úgy van konfigurálva, hogy a kontextusok készleteinek a kontextus száma nagyobb egynél, és úgy van konfigurálva, hogy az egy al-blokkon belüli szignifikáns transzformációs együttható értékek értékeinek szekvenciális kontextushoz alkalmazkodó entrópia kódolása során, a szóban forgó al-blokkhoz való kiválasztott kontextus szám készlet használatával egyedi módon hozzárendelje a kiválasztott kontextusok szám készlet kontextusait a vonatkozó al-blokkon belüli pozíciókhoz.

3. Az 1. vagy 2. igénypont szerint berendezés, ahol a társító (252) úgy van konfigurálva, hogy az al-blokk letapogatási sorrend cikkcakkosan vezet egy legkisebb frekvencia pozíciót magában foglaló al-blokktól egy függőleges irányban és egy vízszintes irányban egy legnagyobb frekvencia pozíciót magában foglaló al-blokkhoz mind a függőleges, mind a vízszintes irányban, míg a pozíció al-letapogatási sorrend minden egyes al-blokkban cikkcakkosan vezet egy a legnagyobb frekvenciára vonatkozó al-blokkon belüli pozíciótól egy függőleges irányban és egy vízszintes irányban egy vonatkozó al-blokk pozícióhoz, amely egy legkisebb frekvenciára vonatkozik mind a függőleges, mind a vízszintes irányban.

4. Az 1-3. igénypontok bármelyike szerinti berendezés, ahol a dekódoló úgy van konfigurálva, hogy a szignifikancia térkép adatfolyamból történő kivonása során

szekvenciálisan kivonjon első típusú szintaxis elemeket az adatfolyamból, az első típusú szintaxis elemek a transzformációs együttható blokkon (256) belüli társított pozíciók vonatkozásában jelzik legalább azt, hogy a vonatkozó pozícióban egy szignifikáns vagy nem szignifikáns transzformációs együttható található-e;

a társító (252) úgy van konfigurálva, hogy szekvenciálisan társítsa a szekvenciálisan kivont első típusú szintaxis elemeket a transzformációs együttható blokk pozícióihoz a transzformációs együttható blokk pozíciók között egy olyan letapogatási sorrendben, amely az előzőleg kivont és társított első típusú szintaxis elemek által jelölt szignifikáns transzformációs együtthatók pozícióitól függ.

5. A 4. igénypont szerint berendezés, ahol a dekódoló (250) úgy van továbbá konfigurálva, hogy az adatfolyamban található információ alapján és az előzőleg kivont és társított első típusú szintaxis elemek által jelzett nem szignifikáns transzformációs együtthatók pozícióinak számától függetlenül felismerje, hogy egy olyan pozícióban, amellyel egy aktuálisan kivont első típusú szintaxis elem van társítva, amely azt jelzi, hogy abban a pozícióban egy szignifikáns transzformációs együttható található, található-e a transzformációs együttható blokkban egy utolsó szignifikáns transzformációs együttható.

6. A 4. vagy 5. igénypont szerint berendezés, ahol a dekódoló (250) úgy van továbbá konfigurálva, hogy olyan első típusú szintaxis elemek, amelyek azt jelzik, hogy a vonatkozó társított pozícióban egy szignifikáns transzformációs együttható található, és hogy közvetlenül rákövetkező első típusú szintaxis elemek közül kivonjon második típusú szintaxis elemeket a bitfolyamból, amelyek azon társított pozíciók vonatkozásában, amelyekben egy szignifikáns transzformációs együttható található, jelzik, hogy a vonatkozó társított pozíció az utolsó szignifikáns transzformációs együttható-e a transzformációs együttható blokkban.

7. A 4-6. igénypontok bármelyike szerinti berendezés, ahol a dekódoló (250) úgy van továbbá konfigurálva, hogy a transzformációs együttható blokk összes első típusú szintaxis elemének kivonását követően soros módon kivonja a szignifikáns transzformációs együtthatók értékeit a transzformációs együttható blokkon belül az adatfolyamból, kontextushoz alkalmazkodó entrópia dekódolás útján, ahol a társító (252) úgy van konfigurálva, hogy szekvenciális módon társítsa a szekvenciálisan kivont értékeket a szignifikáns transzformációs együtthatók pozícióival egy előre meghatározott együttható letapogatási sorrendben a transzformációs együttható blokk pozíciói között, amelynek megfelelően a transzformációs együttható blokk letapogatásra kerül a transzformációs együttható blokk (256) al-blokkjaiban (322) egy al-blokk letapogatási sorrend (320) használatával, és járulékosan a transzformációs együtthatók pozíciónak a letapogatásával az al-blokkokon (22) belül egy pozíció al-letapogatási sorrendben (324), ahol a dekódoló úgy van konfigurálva, hogy a szignifikáns transzformációs együttható értékek értékeinek szekvenciális kontextushoz alkalmazkodó entrópia dekódolása során egy kontextus szám készletek közül kiválasztott kontextus szám készletet használjon, a minden egyes al-blokk vonatkozásában végrehajtásra kerülő kiválasztott készlet kiválasztása a transzformációs együttható blokk egy alblokkján belüli, az al-blokk letapogatási sorrendbe (320) már átforgatott transzformációs együtthatók értékei-

től függ, , vagy egy ugyanott elhelyezkedő al-blokk transzformációs együtthatóinak az értékeitől függ egy ugyanolyan méretű előzőleg dekódolt transzformációs együttható blokkban.

8. A 4-7. igénypontok bármelyike szerinti berendezés, ahol a társító (252) úgy van továbbá konfigurálva, hogy szekvenciálisa társítsa a szekvenciálisan kivont első típusú szintaxis elemeket a transzformációs együttható blokk pozícióihoz egy, a transzformációs együttható blokk első szomszédos oldalpárja között húzódó al-útvonal szekvencia mentén, mely pozíciók mentén egy vízszintes irányban legkisebb frekvencia pozíciók, illetve egy függőleges irányban legmagasabb frekvencia pozíciók vannak pozícionálva, és a transzformációs együttható blokk egy második szomszédos oldalpárja között, amely mentén a függőleges irányban legkisebb frekvencia pozíciók, illetve a vízszintes irányban legnagyobb frekvencia pozíciók vannak pozícionálva, ahol az al-útvonalak a legkisebb frekvencia egy pozíciójától mind a függőleges, mind a vízszintes irányban növekvő távolságúak, és ahol a társító (252) úgy van konfigurálva, hogy meghatározzon egy irányt (300, 302), amely mentén a szekvenciálisan kivont első típusú szintaxis elemek társítva vannak a transzformációs együttható blokk pozícióihoz, a szignifikáns transzformációs együtthatók előző al-letapogatásokon belüli pozíciói alapján.

9. Az 1-8. igénypontok bármelyike szerinti berendezés, ahol

a dekódoló (250) úgy van konfigurálva, hogy a transzformációs együttható blokkon belül a szignifikáns transzformációs együtthatók pozícióit jelző szignifikancia térkép kivonása során szekvenciálisan kivonjon első típusú szintaxis elemeket az adatfolyamból, kontextushoz alkalmazkodó entrópia dekódolás útján, ahol az első típusú szintaxis elemek a transzformációs együttható blokkon belül társított pozíciók vonatkozásában jelzik, hogy a vonatkozó pozícióban egy szignifikáns vagy nem szignifikáns transzformációs együttható található-e; és

a társító (250) úgy van konfigurálva, hogy szekvenciálisan társítsa a szekvenciálisan kivont első típusú szintaxis elemeket a transzformációs együttható blokk pozícióival az előre meghatározott letapogatási sorrendben a transzformációs együttható blokk pozíciói között,

ahol a dekódoló úgy van konfigurálva, hogy az első típusú szintaxis elemek kontextushoz alkalmazkodó entrópia dekódolása során olyan kontextusokat használjon, amelyek egyedi módon vannak kiválasztva minden egyes első típusú szintaxis elemhez, azon pozíciók számától függően, amelyekben az előzőleg kivont és társított első típusú szintaxis elemek szerint szignifikáns transzformációs együtthatók találhatók, azon pozíció szomszédságában, amellyel egy aktuális első típusú szintaxis elem társítva van.

10. A 9. igénypont szerinti berendezés, ahol a dekódoló (250) úgy van továbbá konfigurálva, hogy leképezze azon pozíciók számát, amelyekben az előzőleg kivont és társított első típusú szintaxis elemek szerint szignifikáns transzformációs együtthatók találhatók, azon pozíció szomszédságában, amellyel a vonatkozó első típusú szintaxis elem társítva van, lehetséges kontextus indexek előre meghatározott készletének egy kontextus indexéhez, súlyozva a rendelkezésre álló pozíciók számával azon pozíció szomszédságában, amellyel a vonatkozó első típusú szintaxis elem társítva van.

11. Az 1-10. igénypontok bármelyike szerinti berendezés, ahol a transzformációs együttható blokk egy mélységi térkép tartalomra vonatkozik.

12. Berendezés egy transzformációs együttható blokk kódolására, amely úgy van konfigurálva, hogy egy szignifikancia térképet kódoljon, amely szignifikáns transzformációs együtthatók pozícióit jelzi a transzformációs együttható blokkon belül, és azután a transzformációs együttható blokkon belül a szignifikáns transzformációs együtthatók értékeit bekódolja egy adatfolyamba, úgy, hogy a szignifikáns transzformációs együtthatók értékeinek kivonása során szekvenciálisan kódolja az értékeket kontextushoz alkalmazkodó entrópia kódolás útján, ahol a berendezés úgy van konfigurálva, hogy az értékeket egy előre meghatározott együttható letapogatási sorrendben kódolja az adatfolyamba a transzformációs együttható blokk pozíciók között, ***azzal jellemezve***, hogy a transzformációs együttható blokk letapogatása a transzformációs együttható blokk al-blokkjaiban történik egy al-blokk letapogatási sorrend használatával és járulékosan a transzformációs együttható al-blokkokon belüli pozícióinak egy pozíció al-letapogatási sorrendben történő letapogatásával, ahol a berendezés úgy van továbbá konfigurálva, hogy a szignifikáns transzformációs együttható értékeinek szekvenciális kontextushoz alkalmazkodó entrópia kódolása során egy kontextus szám készletek közül kiválasztott kontextus szám készletet használjon, ahol a berendezés úgy van konfigurálva, hogy a minden egyes al-blokk vonatkozásában végrehajtásra kerülő kiválasztott készlet kiválasztása a transzformációs együttható blokk egy alblokkján belüli, az al-blokk letapogatási sorrendbe már átforgatott transzformációs együtthatók értékeitől függ, vagy úgy van konfigurálva, hogy a minden egyes al-blokk vonatkozásában végrehajtásra kerülő kiválasztott készlet kiválasztása egy ugyanott elhelyezkedő al-blokk transzformációs együtthatóinak az értékeitől függ egy azonosan méretezett előzőleg dekódolt transzformációs együttható blokkban.

13. A 12. igénypont szerinti berendezés, ahol a transzformációs együttható blokk egy mélységi térkép tartalomra vonatkozik.

14. Eljárás egy transzformációs együttható blokk dekódolására, az eljárás tartalmazza:

egy a transzformációs együttható blokkon belül szignifikáns transzformációs együtthatók pozícióját jelző szignifikancia térkép, és azután a transzformációs együttható blokkon belüli szignifikancia transzformációs együtthatók értékeinek kivonását egy adatfolyamból, a szignifikancia transzformációs együtthatók értékeinek kivonása során az értékek kontextushoz alkalmazkodó entrópia dekódolás útján történő szekvenciális kivonásával; és

a szekvenciálisan kivont értékek szekvenciális társítását a szignifikáns transzformációs együtthatók pozícióival egy előre meghatározott együttható letapogatási sorrendben a transzformációs együttható blokk pozíciók között, ***azzal jellemezve***, hogy a transzformációs együttható blokk letapogatását a transzformációs együttható blokk (256) al-blokkjaiban (322) végezzük egy al-blokk letapogatási sorrend (320) használatával és járulékosan a transzformációs együttható al-blokkokon belüli pozícióinak egy pozíció al-letapogatási sorrendben (324) történő letapogatásával,

ahol a szignifikáns transzformációs együttható értékek értékeinek szekvenciális kontextushoz alkalmazkodó entrópia dekódolása során egy a kontextusok számainak készleteiből kiválasztott kontextus szám készletet használunk, úgy, hogy a minden egyes al-blokk vonatkozásában végrehajtásra kerülő kiválasztott készlet kivá-

lasztása a transzformációs együttható blokk egy alblokkján belüli, az al-blokk letapogatási sorrendbe már átforgatott transzformációs együtthatók értékeitől függ, vagy hogy a minden egyes al-blokk vonatkozásában végrehajtásra kerülő kiválasztott készlet kiválasztása egy ugyanott elhelyezkedő al-blokk transzformációs együtthatóinak az értékeitől függ egy azonosan méretezett előzőleg dekódolt transzformációs együttható blokkban.

15. Eljárás egy transzformációs együttható blokk kódolására, az eljárás tartalmazza

egy szignifikancia térkép kódolását, amely szignifikáns transzformációs együtthatók pozícióit jelzi a transzformációs együttható blokkon belül, és azután a transzformációs együttható blokkon belül a szignifikáns transzformációs együtthatók értékeinek egy adatfolyamba kódolását, úgy, hogy a szignifikáns transzformációs együtthatók értékeinek kivonása során szekvenciálisan kódoljuk az értékeket kontextushoz alkalmazkodó entrópia kódolás útján, ahol az értékeket egy előre meghatározott együttható letapogatási sorrendben kódoljuk az adatfolyamba a transzformációs együttható blokk pozíciók között, ***azzal jellemezve***, hogy a transzformációs együttható blokk letapogatását a transzformációs együttható blokk al-blokkjaiban végezzük egy al-blokk letapogatási sorrend használatával és járulékosan a transzformációs együttható al-blokkokon belüli pozícióinak egy pozíció al-letapogatási sorrendben történő letapogatásával, ahol a szignifikáns transzformációs együttható értékeinek szekvenciális kontextushoz alkalmazkodó entrópia kódolása során egy kontextus szám készletek közül kiválasztott kontextus szám készletet használunk, ahol a minden egyes al-blokk vonatkozásában végrehajtásra kerülő kiválasztott készlet kiválasztása a transzformációs együttható blokk egy alblokkján belüli, az al-blokk letapogatási sorrendbe már átforgatott transzformációs együtthatók értékeitől függ, vagy a minden egyes al-blokk vonatkozásában végrehajtásra kerülő kiválasztott készlet kiválasztása egy ugyanott elhelyezkedő al-blokk transzformációs együtthatóinak az értékeitől függ egy azonosan méretezett előzőleg dekódolt transzformációs együttható blokkban.

16. Adatfolyam, amely tartalmazza egy szignifikancia térkép kódolását, amely transzformációs együttható blokkon belül szignifikáns transzformációs együtthatók pozícióit jelzi, amelyeket a szignifikáns transzformációs együtthatók értékei követnek a transzformációs együttható blokkon belül, ahol a szignifikáns transzformációs együtthatók értékei szekvenciálisan vannak kódolva az adatfolyamba kontextushoz alkalmazkodó entrópia kódolás útján a transzformációs együttható blokk pozíciói között egy előre meghatározott együttható letapogatási sorrendben, ***azzal jellemezve***, hogy a transzformációs együttható blokk letapogatása a transzformációs együttható blokk al-blokkjaiban történik egy al-blokk letapogatási sorrend használatával és járulékosan a transzformációs együttható al-blokkokon belüli pozícióinak egy pozíció al-letapogatási sorrendben történő letapogatásával, ahol a szignifikáns transzformációs együttható értékek értékeinek szekvenciális kontextushoz alkalmazkodó entrópia kódolása során egy a kontextusok számainak készleteiből kiválasztott kontextus szám készletet használnak, úgy, hogy a minden egyes al-blokk vonatkozásában végrehajtásra kerülő kiválasztott készlet kiválasztása a transzformációs együttható blokk egy alblokkján belüli, az al-blokk letapogatási sorrendbe már átforgatott transzformációs együtthatók értékeitől függ, vagy hogy a minden egyes al-blokk vonatkozásában végrehajtásra kerülő kiválasztott készlet kiválasztása egy ugyanott elhelyezkedő al-blokk transzformációs

együtthatóinak az értékeitől függ egy azonosan méretezett előzőleg kódolt transzformációs együttható blokkban.

17. A 16. igénypont szerinti adatfolyam, ahol a transzformációs együttható blokk egy mélységi térkép tartalomra vonatkozik.

18. Számítógéppel olvasható digitális tárolóközeg, amely rajta tárolt számítógépi programot tartalmaz, amely program kódot tartalmaz egy számítógépen futtatva a 14. vagy 15 igénypont szerinti eljárás végrehajtására.