Dec. 17, 1963 W. E. TRUMP 3,114,315

DIVE BRAKE

Filed Sept. 26, 1961 2 Sheets-Sheet 1

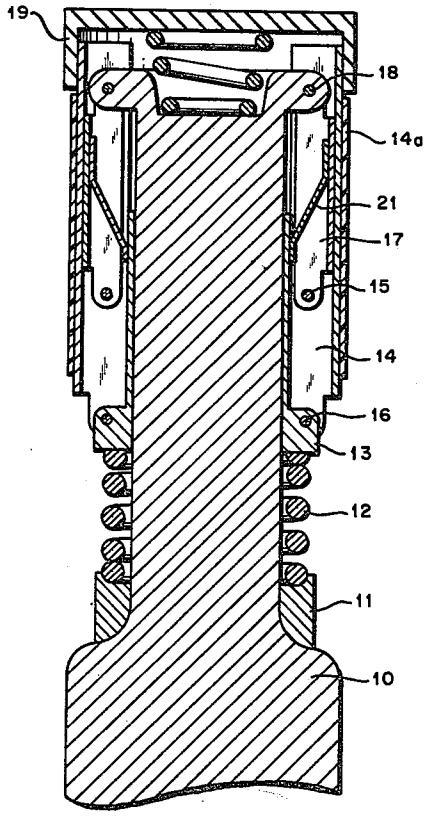

Fig. 1

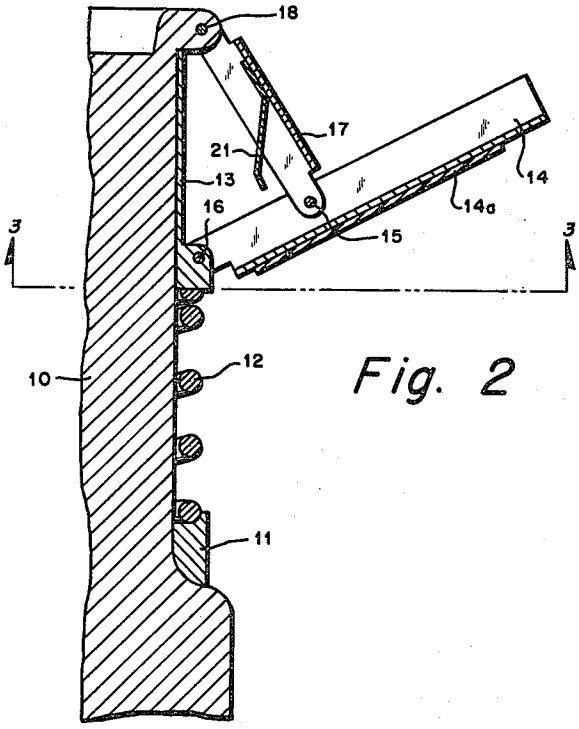

Fig. 2

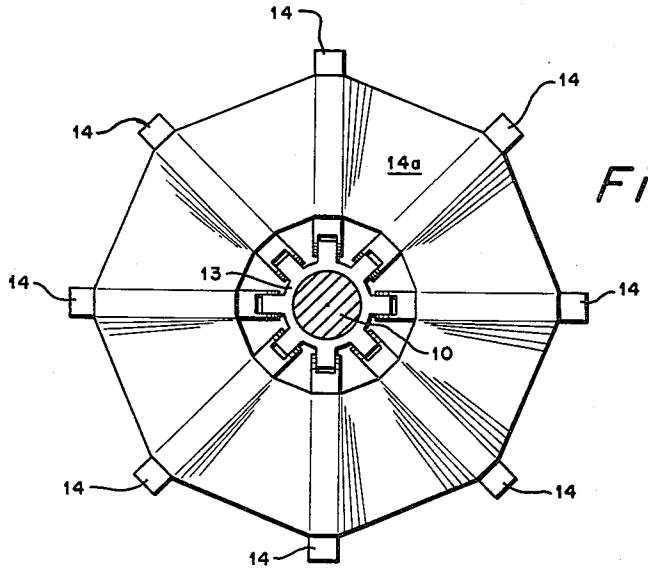

Fig. 3

INVENTOR.
WILLIAM E. TRUMP
BY
ATTORNEY

Dec. 17, 1963 W. E. TRUMP 3,114,315

DIVE BRAKE

Filed Sept. 26, 1961 2 Sheets-Sheet 2

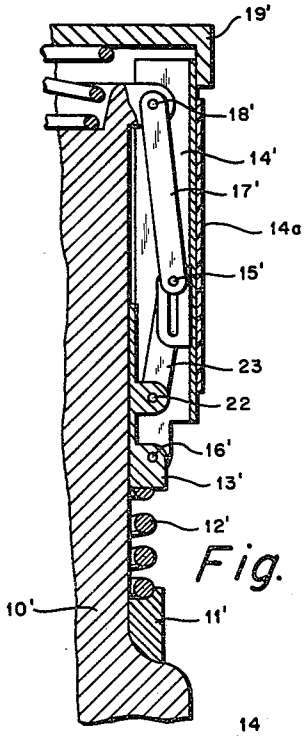

Fig. 4

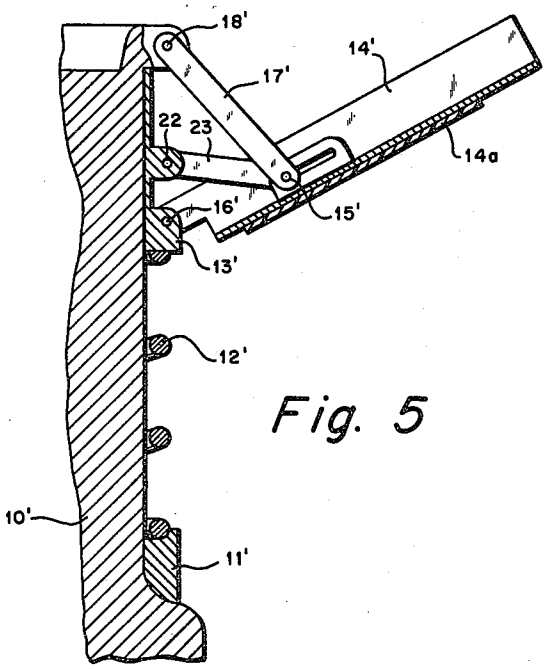

Fig. 5

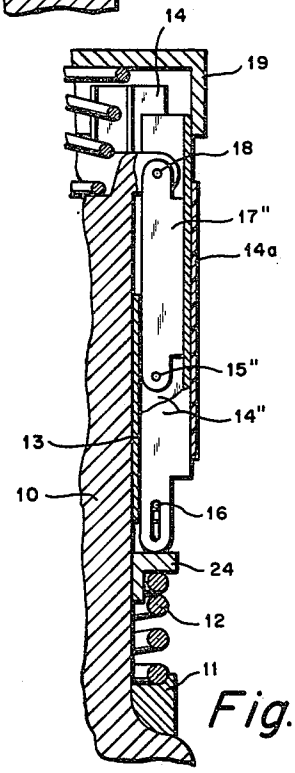

Fig. 6

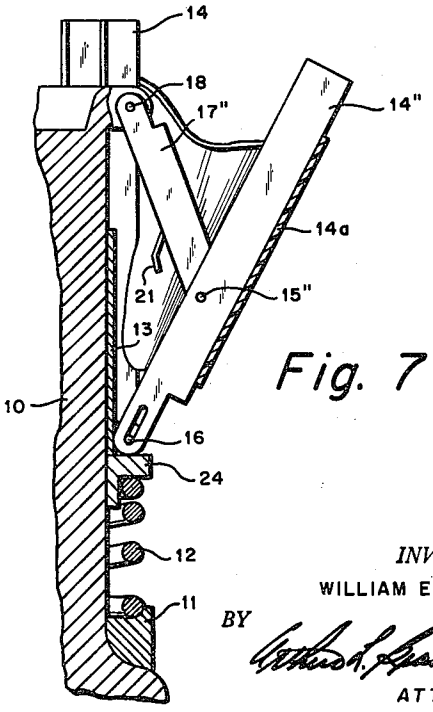

Fig. 7

INVENTOR.
WILLIAM E. TRUMP
BY
ATTORNEY

United States Patent Office

3,114,315
Patented Dec. 17, 1963

3,114,315

DIVE BRAKE

William E. Trump, Warminster, Pa., assignor to the United States of America as represented by the Secretary of the Navy

Filed Sept. 26, 1961, Ser. No. 140,957
6 Claims. (Cl. 102—4)
(Granted under Title 35, U.S. Code (1952), sec. 266)

The invention described herein may be manufactured and used by or for the Government of the United States of America for governmental purposes without the payment of any royalties thereon or therefor.

The present invention relates to dive brakes for retarding the flight of a projectile, and more particularly to an improved force-balanced dive brake capable of uniformly decelerating a projectile, launched at a high initial velocity, to a low terminal velocity without shock.

Dive brakes, as known in the prior art, generally consist of a plurality of blades equally spaced about the circumference of a projectile and which are urged radially outward by springs to increase the drag. The drag may be further increased by adding webbing between the blades. At the extremely high launching velocities, the springs must be relatively large and powerful to overcome the wind force which tends to keep the blades and webbing retracted against the sides of the projectile during the early part of its trajectory. In certain applications, such as antisubmarine warfare where placement accuracy of air-launched sonobuoys is required, the aircraft is usually flown at a low altitude as the sonobuoys are dispatched. Consequently, the trajectory is very short. Being modern search aircraft, the launching velocity is usually high. Conventional dive brakes would therefore require relatively large and powerful springs to urge the dive brake to its extended and operative position early in the trajectory. Even with the larger springs the projectile and dive brake combination is highly unstable aerodynamically at the high velocities present. Separate stabilizing fins often must be added in order to obtain the required degree of target accuracy.

Accordingly, it is an object of the present invention to provide an improved dive brake in which the force necessary to open or extend its blades into an effective drag position is maintained relatively small, in which retarding is effective immediately after the projectile is launched irrespective of the initial velocity, and in which the drag is progressively increased as the projectile decelerates.

Another object of the invention is to provide a force-balanced dive brake in which reaction to the wind force is applied substantially at the center of pressure of each blade of the dive brake.

Still another object of the invention is to provide a dive brake in which fins are formed to further stabilize the projectile throughout the trajectory.

A further object of the invention is to provide a dive brake in which the point of application of the reaction to the wind force substantially continuously coincides with the position of the center of pressure of each blade of the dive brake throughout the trajectory.

A still further object of the invention is to provide a relatively inexpensive dive brake having only a few parts capable of wide application and utility, which is relatively easy to manufacture and assemble, and which can be readily adapted to many varieties of projectiles.

Various other objects and advantages will appear from the following description of the several embodiments of the invention, and the most novel features will be particularly pointed out hereinafter in connection with the appended claims.

In the accompanying drawings:

FIG. 1 represents a longitudinal cross-sectional view

of the rear portion of a projectile having one embodiment of a dive brake of the present invention mounted thereon in its retracted and no-drag position;

FIG. 2 represents a fragment of the same view of the projectile of FIG. 1 except the dive brake is in its fully extended and drag position;

FIG. 3 represents a transverse cross-sectional view of the projectile as taken along the line 3—3 of FIG. 2;

FIG. 4 represents a longitudinal cross-sectional view of a fragment of the rear portion of a projectile having another embodiment of a dive brake of the present invention mounted thereon in its retracted and no-drag position;

FIG. 5 represents the same view of the projectile of FIG. 4 except the dive brake is in its fully extended and drag position;

FIG. 6 represents a fragment of the rear portion of a projectile having still another embodiment of a dive brake of the present invention mounted thereon in its retracted and no-drag position; and

FIG. 7 represents the same view of the projectile of FIG. 6 except the dive brake is in a partially extended and stabilizing position.

In the embodiment of the present invention illustrated in FIGS. 1, 2 and 3, the rear portion of a projectile 10 coaxially supports an annular collar 11 fixed against sliding forward. A helical compression spring 12 coaxially disposed around the periphery of the projectile 10 abuts the rearward face of the collar 11 and the forward face of an annular ring 13 which is coaxially slidable over the rear portion of the projectile 10. An array of blades 14 are each pivotally connected to the ring 13 at one end by a ring pivot pin 16. The pins 16 are equally spaced around the ring 16 on axes normal to the longitudinal axis of the projectile 10 thereby restricting the blades 14 to rotation in radial planes. Flexible webbing 14*a* is fixed to the outer or windward face of the blades 14 to provide greater drag characteristics.

At a point intermediate of its ends, each blade 14 is pivotally connected to one end of a strut 17 by a pivot pin 15. The other end of each strut 17 is pivotally fixed near the rear terminal of the projectile 10 by a pivot pin 18. Each pivot pin 15 is positioned along the length of its respective blade 14 at a radial distance from the longitudinal axis of the projectile 10 not exceeding the radial distance to the center of pressure of the blade 14 when in its fully extended, maximum drag position as shown in FIG. 2. In this manner, any wind force acting against the forward side of the blades 14 will always be opposed by the blade-extending bias of the spring 12. If the pivot pins 15 were placed beyond the minimum radial distance to the center of pressure, the blades 14 would suddenly snap open causing undesirable vibration and stress. It will be observed that force-balancing is partially self-regulating. As the blades 14 extend, the spring 12 elongates thereby diminishing the spring-force moment about the pivot pin 15. Concurrently, the opposing wind-force moment about the pivot pin 15 also diminishes due to shifting of the center of pressure of the blade 14 radially inward and decreasing projectile velocity.

The blades 14 are held in the retracted no-drag position prior to launching by any convenient expedient. In the illustrated embodiment of FIG. 1, a spring-loaded retaining cap 19 is provided whereby its annular side surrounds the free or outer ends of the blades 14 to secure them in a closed or retracted array around the projectile 10. A leaf spring 21 fixed at one end to the radially inner side of each of the struts 17 is biased against the periphery of the projectile 10 when the blades are in the retracted position and thereby provide initial outward movement to the blades 14 about the pivot pins 16 when the cap 19 is ejected.

The operation of the dive brake of FIG. 1 should now be apparent. At the instant the projectile **10** is launched, the cap **19** is ejected by the force of its spring to release the outer ends of the blades **14**. An initial force from leaf springs **21** urges the blades **14** outwardly about the pivot pins **16**. In the nearly retracted position of the blades **14**, the center of pressure on each blade is near the outer end. Consequently, a relatively large wind-force moment is present about each pivot pin **15**. This moment, however, is opposed by a relatively large spring-force moment resulting from the maximum compression of the helical spring **12** acting at the pivoted end of the blade **14**. As the projectile **10** slows down, the wind force at the center of pressure decreases and the spring **12** progressively extends the blades **14**. This, in turn, progressively shifts the center of pressure inward as the force of the spring **12** gradually diminishes due to elongation. This process continues until the ring **13** slides against the pivot pin **18** when the blades **14** are fully extended.

In the second embodiment of the invention illustrated in FIGS. 4 and 5, a similar dive brake is mounted on a projectile **10'**. A fixed collar **11'** abuts a helical spring **12'** which has its other end urged against a slidable ring **13'**. A plurality of blades **14'** are pivotally connected at one end near the forward face of the ring **13'** by pivot pins **16'**. Rear struts **17'**, each pivotally connected at one end to the rear terminal of the projectile **10'**, are each pivotally connected at the other end to a pivot pin **15'** slidable along the length of each blade **14'**. Rearwardly displaced from each pin **16'**, is a pivot pin **22** which pivotally connects one end of a front strut **23** to the ring **13'**. The other end of each front strut **23** is also pivotally connected on the pivot pin **15'**. In this manner, as the blades **14'** are radially extended about the pivot pins **16'**, the pivot pins **15'** move inwardly along the length of the blades **14'**. The amount the pins **15'** move approximates the shift in position of the center of pressure of the wind along the blades **14'**. The technical effect is that the wind-force moment arm about the pins **15'** is progressively shortened thereby affording the use of a light helical spring **12'**. Operation of the dive brake of FIG. 4 is otherwise the same as described in connection with the embodiment of FIG. 1.

FIGS. 6 and 7 show a modification of the dive brake of FIG. 1 for providing a stabilizer configuration to the array of blades **14** throughout the trajectory. This is obtained by having at least three symmetrically opposed blades **14''** slotted parallel to their lengths at the pivoted ends so that they are slidable for a short distance on the pivot pins **16**. Struts **17''**, which connect to the blades **14''** are slightly longer than the other struts **17**, or their pivot pins **15''** are slightly displaced from the other pins **15** so that, in the closed or retracted position, the pivoted ends of the blades **17''** extend beyond the other blades **17** and position the ring **24** a short distance forward from the other blades **17**. Hence, when the projectile **10** is initially launched, the ring **24** will slide rearwardly for the short distance slightly extending the blades **17''** to form thereby a stabilizer-like configuration effective at the initially high velocity. As the projectile **10** continues in its trajectory, the spring **12** will then urge all of the blades **17** and **17''** outwardly in unison, while the slotted blade **17''** remains slightly further extended than the other blades **17**. Stabilizing is effective throughout the complete trajectory.

It should be thus observed that the present invention provides means for reducing the stresses in the structural elements of dive brakes by utilizing a force-balanced principle of blade operation. The required spring force being lighter, obviously permits lighter materials to be used and makes the brake easier to assemble. The linkage arrangement also affords maximum stabilization with a speed brake by maintaining the center of pressure of the wind acting on the dive brake as far rearward from the center of gravity of the projectile as possible. The additional feature of having certain selected blades extended slightly further than the remaining blades adds further to aerodynamic stability heretofore not provided in dive brakes.

It will be understood that various changes in the details, materials, steps and arrangement of parts, which have been herein described and illustrated in order to explain the nature of the invention, may be made by those skilled in the art within the principle and scope of the invention as expressed in the appended claims.

What is claimed is:

1. A force-balanced dive brake for retarding a projectile launched at a relatively high initial velocity to a relatively low terminal velocity, comprising: an annular ring formed to be coaxially mounted on the projectile and for sliding along a rear portion thereof, a plurality of blades each having one end pivotally connected to said ring in a symmeterical array on axes normal to the longitudinal axis of the projectile, said blades being pivotal between a retracted position in which their ends are adjacent to the posterior of the projectile and an extended position in which their other ends are radially displaced outward to increase drag, flexible webbing secured to said blades for increasing the frontal area, a corresponding plurality of rear struts having one end of each formed to be pivotally connected in a similar array to the posterior of the projectile about axes normal to the longitudinal axis of the projectile, a corresponding plurality of front struts having one end of each pivotally connected in a similar array to said ring and rearwardly displaced from the pivotal connections of said blades to said ring, pins pivotally connecting the other ends of said rear and front struts, slot means for slidably and pivotally connecting each of said pins to respective blades along a portion corresponding to the shift in the center of pressure of the blades as they are moved from the retracted position to the extended position, a spring means formed to be helically wound about the projectile with its forward end abutting the projectile, said spring having its rearward end abutting said ring and urging the blades into the extended position; whereby said blades are progressively pivoted to the extended position throughout the trajectory of the projectile.

2. A force-balanced dive brake for retarding a projectile launched at a relatively high initial velocity to a relatively low terminal velocity, comprising: hub means formed to be mounted on the projectile and slidable along a rear portion thereof, a plurality of flap-type spoilers pivotally connected around said hub means, a corresponding plurality of rear struts having one end of each formed to be pivotally connected around the posterior of the projectile, a corresponding plurality of front struts having one end of each pivotally connected around said hub means and rearwardly displaced from the pivotal connections of said spoilers to said hub means, pin means pivotally connecting the other ends of said rear and front struts, slot means for slidably and pivotally connecting each of said pins to respective spoilers along a portion corresponding to the shift in the center of pressure of said spoilers as they are moved from a retracted position to an extended position, a force-exerting means operatively connected between the projectile and said hub means for urging said spoilers into the extended position; whereby said spoilers are progressively pivoted to the extended position throughout the trajectory of the projectile.

3. A projectile for launching at a relatively high initial velocity with minimum shock, comprising, in combination: hub means mounted on a projectile casing and slidable along a rear portion thereof, a plurality of flap-type spoilers pivotally connected around said hub means in a symmetrical array, a corresponding plurality of rear struts having one end of each pivotally connected in a similar array around the posterior of said casing, a corresponding plurality of front struts having one end of each pivotally connected in a similar array to said hub means and rear-

wardly displaced from the pivotal connections of said spoilers to said hub means and rearwardly displaced from the pivotal connections of said spoilers to said hub means, pin means pivotally connecting the other ends of said rear and front struts, slot means for slidably and pivotally connecting each of said pins to respective spoilers along a portion corresponding to the shift in the center of a pressure of said spoilers as they are moved from a retracted position to an extended position, force-exerting means for urging said spoilers into the extended position operatively connected between said hub means and said casing; whereby said spoilers are progressively pivoted to the extended position throughout the trajectory of the projectile.

4. A force-balanced dive brake for retarding a projectile launched at a relatively high initial velocity to a relatively low terminal velocity, comprising: an annular ring formed to be coaxially mounted on the projectile and for sliding along a rear portion thereof, a plurality of blades each having one end pivotally connected to said ring in a symmetrical array on axes normal to the longitudinal axis of the projectile, said blades being pivotal between a retracted position in which their other ends are adjacent to the posterior of the projectile and an extended position in which their other ends are radially displaced outward for increasing drag, flexible webbing secured to said blades for increasing the frontal area, a selected symmetrical group of said blades being slotted along their lengths at the pivotal connections to said ring to allow forward displacement thereof in the retracted position, a corresponding plurality of struts having one end of each formed to be pivotally connected in a similar array to the posterior of the projectile about axes normal to the longitudinal axis of the projectile, each of said struts having the other end pivotally connected respectively near the center of pressure of each blade for limiting the pivoting of said blade between the retracted and extended positions, a corresponding selected symmetrical group of said struts being longer than the other of said struts to displace said selected blades forwardly relative to the other of said blades when in the retracted position, a ring formed for coaxially mounting on the projectile and for sliding along a portion thereof abutting the pivotal end of said selected blades when in the retracted position and abutting the pivotal end of all of said blades when said selected blades are urged toward a partilly extended position, a spring means formed to be helically wound about the projectile with its forward end abutting the projectile, said spring having its rearward end abutting said ring and urging the blades into the extended position; whereby said selected blades form a stabilizer configuration as all of said blades are progressively pivoted to the extended position throughout the trajectory of the projectile.

5. A force-balanced dive brake for retarding a projectile launched at a relatively high initial velocity to a relatively low terminal velocity, comprising: hub means formed to be mounted on the projectile and slidable along a rear portion thereof, a plurality of flap-type spoilers pivotally connected around said hub means, a selected symmetrical group of said spoilers being slotted along their lengths at the pivotal connections to said hub means for forwardly displacing said selected spoilers when in a retracted position, a corresponding plurality of struts having one end of each formed to be pivotally connected around the posterior of the projectile and having the other end pivotally connected respectively near the center of pressure of each spoiler for limiting the pivoting of said spoiler between retracted and extended positions, a corresponding selected group of said struts being longer than the other of said struts to displace said selected spoilers forwardly relative to the other of said spoilers when in the retracted position, a ring means formed to be mounted on the projectile and slidable along a portion thereof and abutting the pivotal end of said selected spoilers when in the retracted position, said ring means further abutting the pivotal end of all of said spoilers when said selected spoilers are urged toward a partially extended position, force-exerting means operatively connected between the projectile and said ring means for first urging the selected spoilers and then urging the remaining spoilers into the extended position; whereby said selected spoilers form a stabilizer configuration as all of said spoilers are progressively pivoted to the extended position throughout the trajectory of the projectile.

6. A projectile for launching at a relatively high initial velocity with minimum shock, comprising, in combination: hub means mounted on a projectile casing and slidable along a rear portion thereof, a plurality of flap-type spoilers pivotally connected around said hub means in a symmetrical array, a selected symmetrical group of said spoilers being slotted along their lengths at the pivotal connections to said hub means for forwardly displacing said selected spoilers in a retracted position, a corresponding plurality of struts having one end of each pivotally connected in a similar array around the posterior of said casing and having the other end pivotally connected respectively near the center of pressure of each spoiler for limiting the pivoting of said spoiler between the retracted and extended positions, a corresponding selected symmetrical group of said struts being longer than the other of said struts to displace said selected spoilers forwardly relative to the other of said spoilers when in the retracted position, a ring means mounted on said casing and slidable along a portion thereof and abutting the pivotal end of said selected spoilers when in the retracted position, said ring means abutting the pivotal end of all of said spoilers when said selected spoilers are urged toward a partially extended position, force-exerting means operatively connected between said casing and said ring means for first urging the selected spoilers and then urging the remaining spoilers into the extended position; whereby said selected spoilers form a stabilizer configuration as all of said spoilers are progressively pivoted to the extended position throughout the trajectory of the projectile.

References Cited in the file of this patent

UNITED STATES PATENTS

1,626,363	Sperry	Apr. 26, 1927
2,468,795	Winters	May 3, 1949
2,509,481	Crise	May 30, 1950
3,047,259	Tatnall et al.	July 31, 1962