June 7, 1932. M. P. JANISCH 1,861,800

AUTOMATIC CIRCUIT BREAKER

Filed Dec. 7, 1928

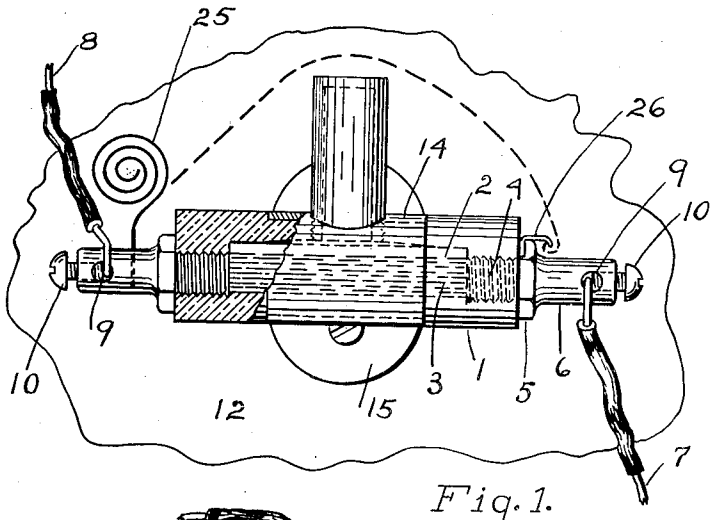

Fig. 1.

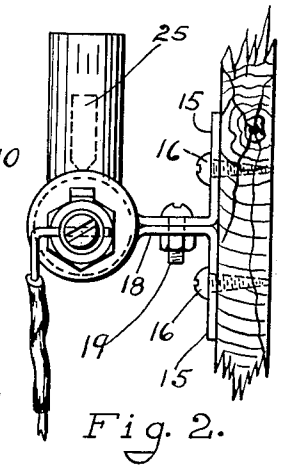

Fig. 2.

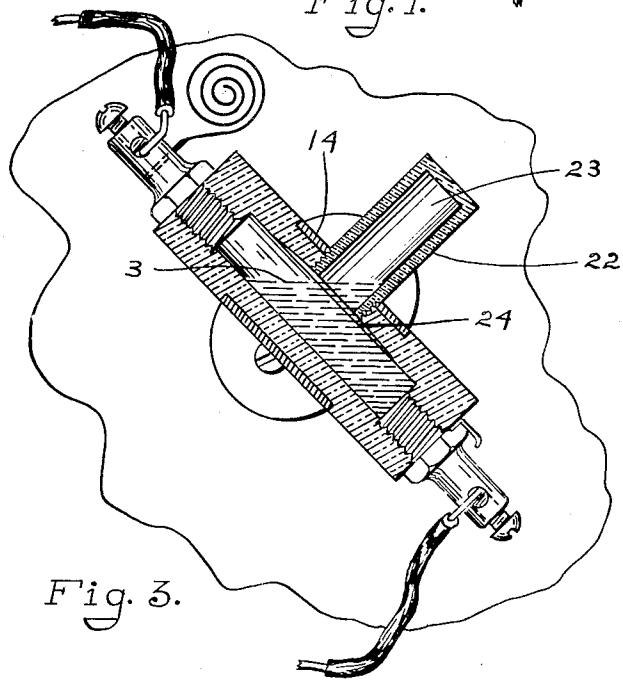

Fig. 3.

INVENTOR.
Maximillian P. Janisch
BY
Erwin, Wheeler & Woolard
ATTORNEYS

Patented June 7, 1932 1,861,800

UNITED STATES PATENT OFFICE

MAXIMILLIAN P. JANISCH, OF MILWAUKEE, WISCONSIN, ASSIGNOR TO STEELSTAMP CORPORATION, OF MILWAUKEE, WISCONSIN, A CORPORATION OF WISCONSIN

AUTOMATIC CIRCUIT BREAKER

Application filed December 7, 1928. Serial No. 324,469.

My invention relates to improvements in automatic circuit breakers with particular reference to means for automatically breaking the ignition circuit of a motor driven vehicle.

The object of the invention is to prevent continued engine operation and reduce fire hazards whenever a motor driven vehicle is inverted or tilted to a dangerous angle at which a wreck becomes imminent.

More particularly stated, my object is to provide a simple circuit breaker which can be included in the ignition circuit of a motor driven vehicle in such a position that it will not interfere with engine operation under ordinary conditions but will automatically break the ignition circuit if the vehicle is inverted or tilted to a point where its center of gravity is near, at, or beyond, a vertical plane through the points of contact between the wheels and the ground on either side of the vehicle.

In the drawing—

Figure 1 is a front view of my improved circuit breaker as it appears when attached to the dash of a motor driven vehicle underneath the instrument board, parts being broken away to show the interior cavity and the circuit controlling liquid therein;

Figure 2 is an end elevation of the circuit breaker, a fragment of the dash being indicated in section;

Figure 3 is a longitudinal sectional view including also a fragment of the dash and showing the circuit breaker tilted to a circuit breaking position.

Like parts are identified by the same reference characters throughout the several views.

A cylinder 1 formed of insulating material has a central cavity 2 which is partially filled with a body of mercury or equivalent conducting fluid 3. The ends of this cylinder are interiorly threaded to receive the screw threaded plugs 4 which preferably are formed integrally with cap nuts 5 and binding posts 6 with which the wires 7 and 8 of the ignition circuit are connected. Preferably the ends of the wires are extended through apertures 9 in the respective binding posts and secured in position by set screws 10.

The cylinder is attached to the dash board 12 in a normally horizontal position. It is secured in place by a band 14, the ends of which are outwardly turned to form foot pieces 15 adapted to be connected with the dash board by screws 16, as best shown in Figure 2. The portions 18 of the band, between the foot pieces and the central portion which encircles the cylinder 1, are brought together in a parallel position and secured by a clamping bolt 19. The band is thus made to form a supporting or connecting bracket for the cylinder.

On the upper side of the cylinder 1 a plug 22 is inserted through the band 14 and the cylinder wall and this plug has an interior bore or cavity 23 of sufficient capacity to receive the liquid 3. If desired, the central portion of the cylinder may be slightly enlarged or cut away on the upper side, as indicated at 24, to facilitate drainage of the liquid into the cavity 23 when the cylinder is inverted from its normal position.

It will be observed that while the cavity 2 is cylindrical in form the plugs 4 are threaded into its ends with their axes below the axial line of the cylindrical cavity 2, whereby each plug at its lower side is flush with the bottom of the cavity 2 and its top is at a substantial distance therefrom, whereby when the cavity 2 is filled with mercury to about the level of the tops of the plugs while the cylinder is in a horizontal position, the cavity being of larger diameter than the plugs 4, there will be a sufficient enlargement of the cavity above the normal level of the liquid to allow the liquid to shift toward one end or the other out of contact with the plug at the opposite end only during extreme tilting movements, whereas in all other positions permitting even a film of the liquid to extend from one end of the cavity to the other on the lower side, the electrical circuit will be maintained. This is a highly important feature of my invention, since otherwise the movements of the vehicle and shocks incident to travel along the roadway and which constantly tend to displace liquids in one direction or another, would be continuously interrupting the cir-

cuit even though only momentarily. The objection to such casual frequent interruptions will be apparent.

Normally the body of liquid 3 electrically connects the two binding posts and allows the ignition circuit to function in the ordinary manner. A sufficient quantity of liquid is used so that the circuit will not be broken when turning corners at any safe speed or when the car is on an inclined surface with insufficient pitch to put it in jeopardy either when in motion or when at rest. But when the car is tilted to a dangerous angle or when it is thrown on its side, the mercury will flow to one end of the tube or cylinder 1 and the binding post at the upper end will be left without any electrical connection with the binding post at the lower end, the ignition circuit being thus broken.

If the car should be inverted, the liquid will flow into the hollow plug 22 and thus break the ignition circuit. It will therefore be obvious that the engine will be automatically stopped whenever the car is tipped out of running position on the road, thereby eliminating, or at least reducing, the fire hazard and also preventing injury from being inflicted by revolving wheels or by continued motion of a tilted car which has not tipped over but which is out of control and likely to do so if its engine continues to run.

Occasionally a car may be tilted to a dangerous angle, stopped, and arrangements made for guiding it back to a safe position on the roadway and under such conditions it will be desirable to provide means whereby the ignition circuit may be temporarily closed for that purpose. I have therefore attached to one end of the cylinder 1, or to one of the binding posts, a coil 25 of conducting wire of sufficient length to bridge the gap between the two binding posts exterior to the cylinder 1, as indicated by dotted lines in Figure 1.

The binding post at the opposite end from that occupied by the coil 25 may be provided with a hook 26 with which the wire may be conveniently connected or, if desired, the wire may be of sufficient length to enable it to be wound around the clamping screw 10. In either case, the wire may be quickly uncoiled and used to temporarily bridge the ignition circuit for the above described purposes. After the car has been successfully restored to the roadway, the wire may be disengaged and recoiled upon or about the binding post to which it is permanently attached, whereupon the circuit breaker will again be in functioning condition.

I claim:

1. A circuit breaker for the ignition circuits of motor driven vehicles comprising an elongated chamber composed of non-conductive material, means for supporting said chamber transversely of the vehicle with its longitudinal axis horizontally disposed, ignition circuit conductors having terminal plugs at the respective ends of said chamber, a body of conductive liquid within the chamber normally electrically connecting said terminal plugs and in sufficient quantity to maintain continuous contact with said plugs under normal variations in any position of said liquid under the conditions of roadway travel, and an upwardly extending receiver for said liquid in communication with the central portion of the top of said chamber and adapted to receive said liquid, when the vehicle is inverted, in such quantity as to break the electrical connection between the plugs.

2. The combination with the instrument board of a motor driven vehicle, of an elongated circuit breaker casing secured thereto in a position of horizontal extension along said instrument board, and provided with a longitudinally extending cylindrical bore adapted to receive a quantity of mercury, ignition circuit conductors having terminal plugs threaded into the ends of said casing with the inner ends of the plugs exposed to the mercury at the bottom of said cylindrical bore, a body of mercury within said bore in sufficient quantity to maintain a continuous electrical connection between said plugs under all ordinary conditions of roadway travel, and a receiving chamber connected with the top of said casing and into which mercury may flow when the vehicle is inverted.

MAXIMILLIAN P. JANISCH.