Feb. 22, 1966 H. F. WEBSTER 3,237,047

TRANSVERSE BUNCHING TUBE

Filed Dec. 1, 1960 2 Sheets-Sheet 1

Fig. 1.

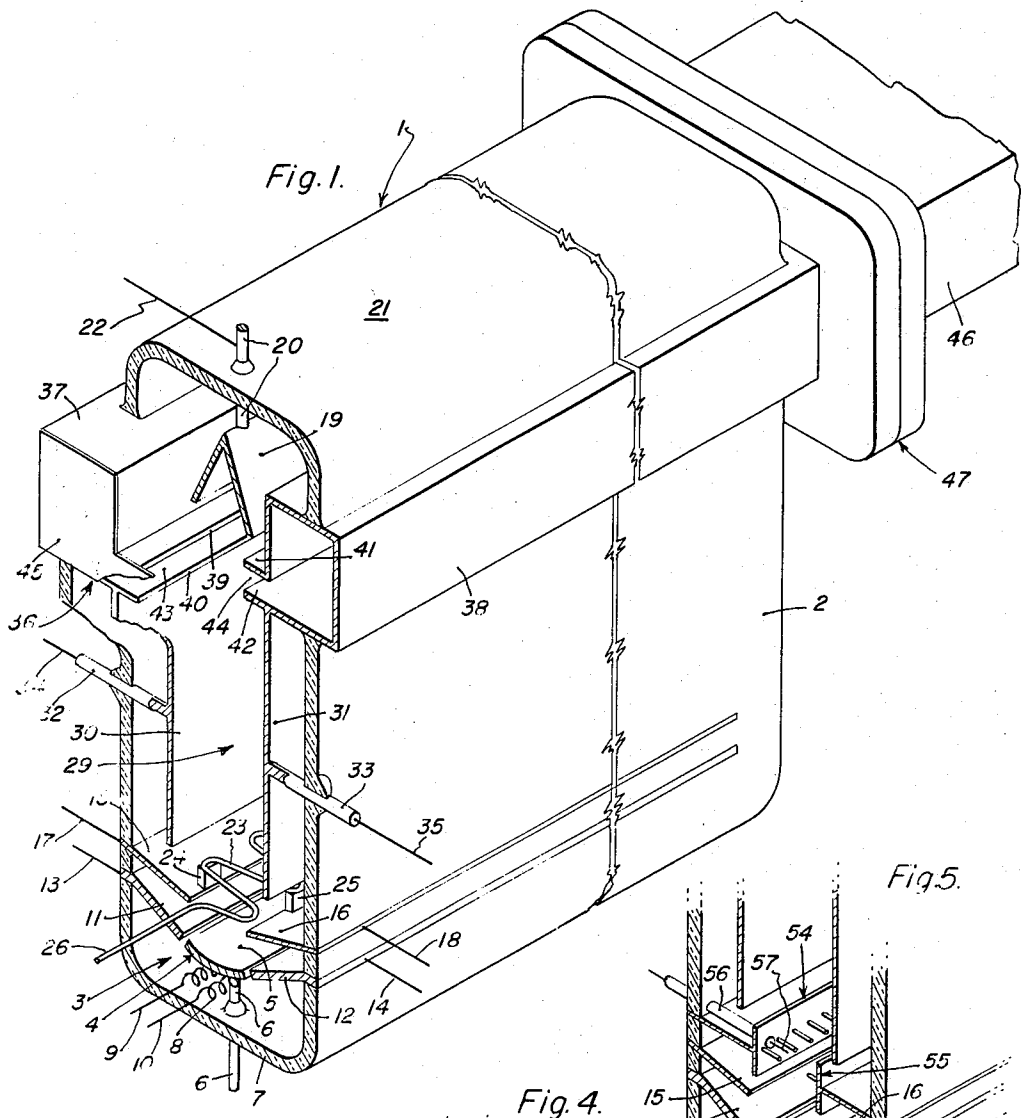

Fig. 4.

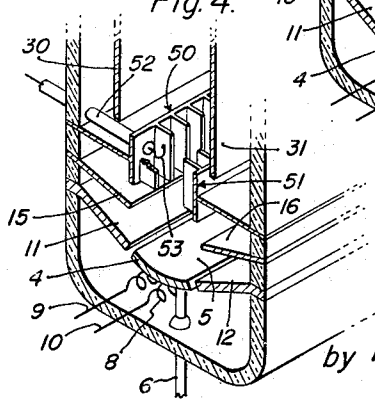

Fig. 5.

Inventor:
Harold F Webster,
by Karl A. Ohralik
His Attorney.

Feb. 22, 1966 H. F. WEBSTER 3,237,047

TRANSVERSE BUNCHING TUBE

Filed Dec. 1, 1960 2 Sheets-Sheet 2

Fig. 3.

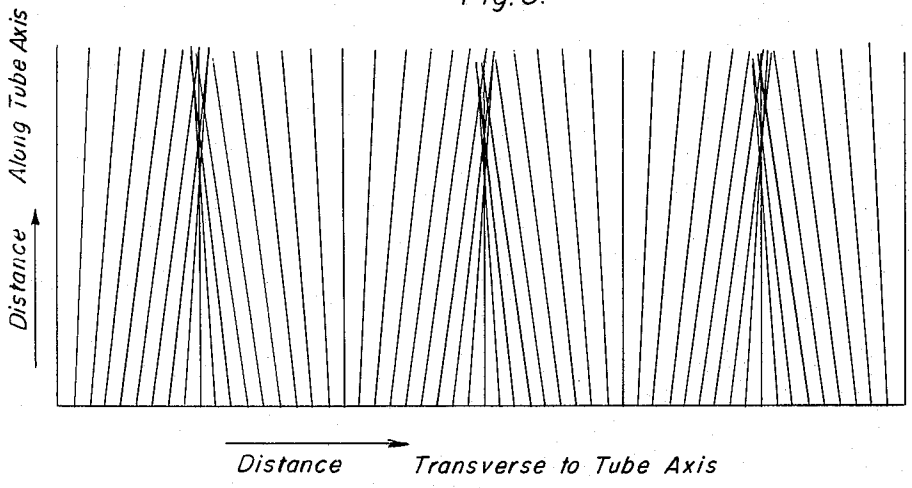

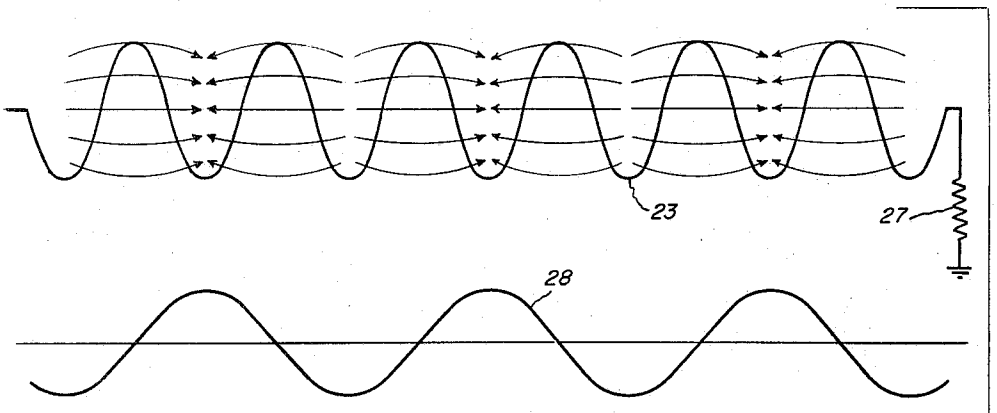

Fig. 2.

Inventor:
Harold F. Webster,
by Karl A. Ohralik
His Attorney.

United States Patent Office 3,237,047 Patented Feb. 22, 1966

3,237,047

TRANSVERSE BUNCHING TUBE

Harold F. Webster, Scotia, N.Y., assignor to General Electric Company, a corporation of New York

Filed Dec. 1, 1960, Ser. No. 72,943
6 Claims. (Cl. 315—5.29)

This invention relates to a novel electron discharge tube apparatus and method useful for amplifying or producing electromagnetic waves.

In many electron tubes of known types such as klystrons and traveling wave tubes, an electron beam is either velocity or density modulated by a grid, buncher or other electrode interposed in the beam path. In these prior tube devices the modulating potential accelerates or retards the motion of electrons along their lines of flight from the cathode to a collector electrode. In relatively high power tubes utilizing high power beams such as sheet beams, the modulating potential is required to control a large number of electrons which are of relatively high energy and relatively high potentials are required for such control.

It is, accordingly, a primary object of my invention to overcome the necessary use of high potentials for beam control and facilitate the control of high power, high potential electron beams by a relatively weak signal.

In accordance with my invention, modulating potentials for controlling a sheet electron beam are produced on a slow wave structure interposed transversely of the beam path. A traveling wave may be established on the slow wave structure by terminating it in its characteristic impedance or standing waves may be established on it by shorting one end of it. Establishing either a traveling or a standing wave along the slow wave structure is effective to produce a sequence of alternately, oppositely directed electric fields transverse to the beam path and therefore, to impart oppositely directed components of velocity to the electrons in the beam which are transverse to the directions of flight of the electrons along the tube axis. With a slow wave structure several wave lengths long, the oppositely directed electric fields are produced and extend along the slow wave structure from respective crests to troughs of the wave, to impart the transverse, oppositely directed, components of motion to different groups of electrons in the beam. The electrons after passing through the region of the slow wave structure enter a drift region wherein the transverse components of velocity imparted to the electrons causes them to converge into bunches. When the signal is a traveling wave on the slow wave structure, the location of convergence of the electrons also travels transversely of the beam direction. That is, the bunched portion of the beam has a phase velocity in this direction.

For obtaining an output potential, the bunched portion of the beam is caused to pass in a direction across a gap in an output resonator or wave guide wherein the gap is coextensive with the cathode and beam. The electrons are then collected by an electrode disposed beyond the wave guide from the cathode. With this arrangement the transverse deflection of the electrons may be produced by relatively low signal potential applied to the slow wave structure and in traveling through the drift region, their deviation from an axial course becomes increased. As the electrons travel along the drift tube they converge into relatively high density bunches and as the bunches traverse the gap of the output wave guide, potentials are induced therein, which potentials, depending upon certain factors including the beam potential, are of a magnitude considerably greater than that of the input signal.

The slow wave structure can take on many different characters and in one embodiment comprises a wire extending across the cathode and having components along the length of the cathode and transverse thereto. The slow wave structure can also be a series of conductive baffles or conductive prongs projecting into the beam path.

The novel features believed characteristic of the invention are set forth in the appended claims. The invention itself, together with further objects and advantages thereof, may best be understood with reference to the drawings in which:

FIGURE 1 is a broken away perspective view of an electron tube apparatus according to my invention,

FIGURE 2 is a detail view showing a grid structure forming a part of the tube of FIGURE 1 and accompanying electric fields at an instant of time of the operation are represented by the lines terminating in arrows,

FIGURE 3 is a modified Applegate diagram illustrating the flight of electrons in the tube of FIGURE 1 at any instant of time in which the abscissa is the distance along the cathode and the ordinate is the axial distance along the beam from the cathode, and

FIGURES 4 and 5 are broken away perspective views particularly illustrating alternative embodiments of slow wave structure adaptable for operation in the tube of FIGURE 1.

Referring now more particularly to FIGURE 1 of the drawings for a more detailed description of my invention, 1 represents a cut away perspective view of an electron discharge device embodying my invention and comprising an evacuable enclosure 2 made of glass or other suitable insulating material for containing the several parts of the tube. At one end of the tube is disposed a sheet electron beam forming gun 3 including a cathode 4 having a concave surface 5 and being elongated to extend substantially the entire length of the tube 1. The cathode 4 is rigidly secured in position by a conductive rod 6 secured to a surface portion of the cathode opposite to the concave surface 5 at a point not shown and extends through a wall 7 of the envelope to facilitate electrical connections to the cathode from externally disposed circuit elements. Depending on the physical size of the cathode, one or more additional supporting rods, not shown, similar to rod 6 are disposed along the tube envelope to provide support for the cathode. However, in most instances, the external cathode connections required may be provided by a single external lead as provided by rod 6. For raising the temperature of cathode 4 to provide copious electron emission from surface 5, a heater winding 8, the end portions of which are shown, is disposed and supported in any suitable manner in close proximity to the surface of cathode 4 opposite to the concave surface 5. For supplying an energizing current to this heater, a pair of line connections 9 and 10 are provided which may extend externally of the envelope through a wall broken away and not shown. To aid in electron beam formation, focusing electrodes 11 and 12 are disposed on respective sides of cathode 4 and are substantially coextensive with it. Each of these electrodes is in spaced relationship to an edge of the cathode and is embedded in a wall of tube 2 in sealed relationship therewith for support. These electrodes may be at the same potential as cathode 4 or slightly negative with respect to it during operation and lead lines 13 and 14 are connected to these electrodes for applying appropriate potentials.

To further aid in forming a beam from the electrons emitted from the cathode, a pair of beam forming plates 15 and 16 are provided with edges also embedded in the envelope 2 for support of the plates. These plates are substantially coextensive with the cathode and the inner edges of the plates are in approximate vertical axial alignment with inner edges of respective focusing electrodes 11 and 12, as seen in FIGURE 1. These electrodes may be charged to suitable values of accelerating potentials through line connections 17 and 18 connected to respec-

tive ones of these electrodes. The electrons in the beam are intercepted and collected at a collector electrode **19** mounted at the end of the tube remote from gun **3**. The collector electrode **19** is supported by a conductive rod **20** secured to this electrode and sealed in the upper wall **21** of the envelope **2**. This rod extends beyond the wall **21** externally of the envelope for providing a terminal member for applying appropriate potentials to the collector. Depending on the size of the collector, one or more other rods are provided for supporting the collector electrode. Such additional rod or rods need not extend externally of the envelope **2** although they may be so constructed. Suitable potentials may be applied to collector **19** and rod **20** through a line connection **22** attached to this rod.

The beam formed by the members thus far set forth is a sheet beam of a width somewhat less than the width of the cathode and substantially equal to the length of the cathode and extending from this cathode axially to the collector electrode. In the absence of any other influence the individual electrons in the beam travel along paths substantially parallel to the tube axis. In accordance with a feature of my invention, however, the motion of the beam electrons is modified by the potential on a slow wave grid structure comprising a serpentine or woven wire **23** having portions extending across the beam path at an axial location near the beam forming plates **15** and **16** and on the side thereof remote from the cathode. Insulating supporting members such as shown at **24** and **25**, which may be of a suitable ceramic material, are provided between the respective beam forming electrodes **15** and **16** and the grid wire **23** for supporting the grid wire in position. Additional supporting members similar to members **24** and **25** are provided at spaced points along the length of the gun **3** to maintain a relatively fixed position of the grid wire **23** with respect to other parts of the tube. One end **26** of the grid wire **23** extends externally of the envelope **2** for applying an electrical signal to be amplified. For establishing a traveling wave on the line the other end of this wire is preferably terminated in a characteristic impedance of the grid wire line to prevent reflection of electromagnetic wave energy back along the grid wire. This characteristic impedance is represented by the resistor **27** in FIGURE 2 of the drawings showing the grid **23** in detail. In the embodiment of my invention utilizing standing waves the grid wire is shorted to the beam forming electrodes or left open to reflect energy from the end thereof.

In one embodiment of my invention therefore, the application of an electromagnetic wave signal to the grid **23** thus produces a traveling wave, an instantaneous condition of which is represented by the curve **28** in FIGURE 2 along this line. Crests and troughs of electrical potential successively pass each point along the grid with a phase velocity substantially equal to the velocity of propagation of the electromagnetic wave along the grid wire, multiplied by the ratio of the pitch of the weave of the grid **23** to the length of grid wire between points determining such pitch. The instantaneous spaced crests and troughs of the traveling wave on the grid **23** produce electric fields between each crest and the next adjacent trough as represented by the lines terminating in arrows in FIGURE 2. Thus, pairs of opposed fields are produced along the length of the grid. The electric fields produced by the traveling wave described hereinabove are transverse to the axial direction of motion of the electrons in the beam and therefore, the forces of these fields impart transverse components of velocity to the passing electrons.

In an alternative embodiment of my invention utilizing a standing wave on grid **23** for controlling the electrons in the beam, the potential distribution along the grid may again be represented by the curve **28** in FIGURE 2 of the drawings. In this case, however, the crests and troughs of potential appearing on this grid remain

fixed in space but vary in amplitude with time. The lines terminating in arrows shown in FIGURE 2 would again represent an electric field distribution on the grid **23** which field is effective in producing a convergence of electrons in the sheet beam. In other respects the action that occurs in the tube with a standing wave on the grid **23** rather than a traveling wave on this grid is similar to that which occurs with the traveling wave. However, with a standing wave applied to grid **23**, the output wave produced in the output wave guide is also a standing wave. For abstracting energy in such a modification, the output wave guide is preferably shorted at each end and a coupling loop is coupled to the wave and connected to an output line.

The electrons emitted from cathode **4** after passing the grid **23** enter a drift region **29** formed by a pair of spaced, oppositely disposed, planar electrodes **30** and **31** having adjacent surfaces substantially parallel with each other and in axial alignment with the inner edges of the beam forming electrodes **15** and **16**. Conductive rods **32** and **33** are respectively connected to the electrodes **30** and **31** and each of these rods extends externally of the tube through envelope **2** to facilitate application of electrical potentials to these electrodes as, for example, through line connections **34** and **35**. One or more additional supporting rods, not shown, and similar to rods **32** and **33** may be provided along the length of the tube. Such additional rods need not extend through the envelope **2** since a single external terminal is sufficient.

In a manner hereinabove described, an electromagnetic wave on grid **23** produces electric fields transverse to the electron beam as shown in FIGURE 2 which initiates a converging motion to different groups of electrons. The electrons of the beam in traversing the grid **23**, in addition to their axial motion are urged in the directions of the electric field as shown in FIGURE 2 of the drawings. As these electrons progress axially along the tube and enter the drift space **29**, groups of them progressively converge in the manner shown in the Applegate diagram in FIGURE 3 of the drawing. In this diagram the abscissa represents distance along the grid structure and the ordinate represents the distance axially along the tube from the grid structure toward the collector electrode.

It is also clear that the electromagnetic wave impressed upon the grid **23** is effective in imparting an axial acceleration or deceleration to the electrons in the beam as well as the transverse components of acceleration. However, since these axial components of force are so small in relation to forces produced by the beam potential applied, they are insignificant and may be disregarded in connection with the flow of the electron beam along the tube axis.

In accordance with a feature of my invention, the formation of the bunches in the manner described is utilized to obtain an output potential of considerably larger magnitude than that of the input signal. To this end, a wave guide **36** is formed into two separate portions **37** and **38** and is mounted in substantially parallel relationship with the electrodes of the tube including the cathode, focusing electrodes and beam forming electrodes. For support, the wave guide portions may be sealed in the wall of envelope **2**.

The wave guide portions **37** and **38** are preferably of generally rectangular or square cross-section and have longitudinal slots along adjacent walls with lips **39** and **40** extending transversely inwardly from wave guide portion **37** and lips **41** and **42** extending from wave guide portion **38** to form a pair of opposed output gaps **43** and **44** in the wave guide. Each pair of lips terminates at approximately the axial projection of the corresponding edge of cathode **4**. The end of the wave guide is closed by a conductive member **45** shown broken away. The respective wave guide portions are conductively connected to electrodes **30** and **31** and are thus operated at the potentials of these electrodes.

It is to be noted that, as shown in FIGURE 3 of the drawings, the electron beam becomes most intensely bunched at a certain location along the tube axis for any particular grid potential and that the axial locations beyond this point, the beam becomes dispersed or, in other words, becomes debunched. The location of the output gaps **43** and **44** is coordinated with the beam potential and the control potentials imposed on grid **23** so as to be generally in the region of the maximum bunching of electrons as shown in the Applegate diagram of FIGURE 3. The passing bunches of electrons are effective to induce potentials across these gaps and thus, to produce electromagnetic waves within the wave guide portions. It is noted that the intensity of the bunching affects the magnitude of the potential induced across the gaps with the greater bunch densities producing higher potentials. Thus, it is to be noted that the beam potential and signal potential must be coordinated so as to be responsive to the maximum input signal to produce maximum bunching of the beam when it is at an axial location corresponding with the output gaps or otherwise the maximum input signal would not produce the maximum output signal. Since it is usually desirable to utilize the maximum input signal available on any occasion, the beam potential may be controlled so as to effect this proper operation.

The amplified output produced in wave guide **36** is conducted through an extension of the wave guide shown at **46** joined through a junction **47**.

In FIGURES 4 and 5 are shown alternative embodiments of my invention utilizing different forms of slow wave structures for introducing signals into the tube. In FIGURE 4, a pair of opposed sets of baffles **50** and **51** are mounted between the beam forming plates **15** and **16** and the axially spaced electrodes **30** and **31**. A coaxial input line **52** has its inner conductor terminated in an exciting loop **53** and conductively joined to one of the baffles. In FIGURE 5 the slow wave structure includes a pair of opposed members **54** and **55** each having a row of conductive prongs extending transversely of the tube axis. A coaxial input line **56** has its inner conductor **57** terminating in a coupling probe for introducing a signal to the tube. The slow wave structure of these embodiments are effective to produce electric fields similar to those produced by grid **23** and tubes utilizing these baffles or rods operate in a manner entirely similar to that of the tube utilizing grid **23**.

It is to be noted that although my invention has been described with respect to its applicability as an amplifier of electromagnetic waves, it is also adaptable for producing electromagnetic waves as an oscillator. Under these circumstances enough energy is fed back from the output circuit to the input circuit to overcome the system losses and impress a signal on the input circuit.

In accordance with the foregoing description it is noted that I have provided a novel and improved electron tube circuit and method facilitating relatively high potential and power amplification of electromagnetic wave signals.

While the present invention has been described by reference to particular embodiments thereof, it will be understood that numerous modifications may be made by those skilled in the art without actually departing from the invention. I, therefore, aim in the appended claims to cover all such equivalent variations as come within the true spirit and scope of the foregoing disclosure.

What I claim as new and desire to secure by Letters Patent of the United States is:

1. An electron tube apparatus comprising an elongated cathode electrode for producing a sheet beam of electrons, means for accelerating said beam along a predetermined path, a slow wave structure for propagating electromagnetic wave energy including a plurality of conducting sections extending in one transverse direction with respect to the beam path and in mutually spaced relation in the other transverse direction with respect to the beam path for producing electric fields in said path in said other transverse direction with respect to the path of the sheet beam for imparting components of velocity to electrons in said beam in said other transverse direction, a drift region along said path and on the side of said cathode remote from said slow wave structure whereby electrons in said beam having transverse and longitudinal components of velocity are caused to converge as a result of the transverse components of velocity into bunches and an output circuit comprising an elongated wave guide having a gap extending longitudinally therealong and being in proximity to said path whereby electrons passing said gap induce potentials in said wave guide of a magnitude greater than the magnitude of an electric wave on said slow wave structure.

2. An electron tube apparatus comprising means for producing a sheet beam of electrons along a predetermined path including a plurality of conducting sections extending in one transverse direction with respect to the beam path and in mutually spaced relation in the other transverse direction with respect to the beam path, a slow wave structure interposed in said path for producing a series of oppositely directed electric fields in said other transverse direction with respect to said path in response to propagation of electromagnetic wave energy along said slow wave structure, a drift region along said path and on the side of said slow wave structure remote from said cathode, an output circuit comprising an elongated wave guide having a longitudinal slot in proximity to said path and being transverse thereto, the transverse electric field produced by said slow wave structure imparting transverse components of velocity to the electrons of said beam to produce electron bunches in said drift region as a result of transverse velocity components thereof to induce output potentials in said output wave guide having components of electric field across said gap.

3. An apparatus according to claim **2** wherein said slow wave structure comprises a wire extending generally in said other transverse direction and in spaced relation with respect to said cathode in the direction of the electron beam, and said output wave guide comprises a ridged wave guide.

4. An apparatus according to claim **2** wherein said output circuit comprises a wave guide having a rectangular cross section with a longitudinal slot along said wall thereof in proximity to said path.

5. An apparatus comprising means for producing an electron beam along a predetermined path, the thickness of said beam being small in relation to its width, a slow wave structure for supporting propagation of electromagnetic wave energy through said path including a plurality of conducting sections extending in the direction of the thickness of the electron beam and spaced along the width of the electron beam to produce electric fields in the direction of the width of said beam in response to propagation of electromagnetic wave energy therealong and imparting velocity components to the electrons of said beam in the direction of the width of said beam, a drift region along said path and on the side of said cathode remote from said slow wave structure for effecting bunching of electrons in said beam as a result of the transverse velocity components thereof under the influence of said transverse electric fields, and an output wave guide circuit in proximity to said path and being responsive to the passage of the bunches of electrons to produce an output wave therein,

6. An electron tube apparatus comprising means for producing a sheet beam of electrons along a predetermined path, modulating electrode structure in the electron beam path for establishing standing waves including conducting sections extending in one transverse direction with respect to the beam path and in spaced relation in the other transverse direction with respect to the beam path to produce electric field components in the other transverse direction with respect to said path for producing a series of oppositely directed electric fields, a

drift region along said path and on the side of said field producing means remote from said beam producing means, an output circuit comprising an elongated waveguide having a longitudinal slot in proximity to said path, the transverse electric field components produced by said electric field producing means imparting transverse components of velocity to the electrons of said beam to produce electron bunches in said drift region as a result of the transverse movement of the electrons to induce output potentials in said output wave guide in response to the passage of said bunches past said gap.

References Cited by the Examiner

UNITED STATES PATENTS

2,468,152	4/1949	Woodyard	315—5.27 X
2,698,398	12/1954	Ginzton	315—39.3 X
2,927,832	3/1960	Marchese	315—3.6
2,955,227	10/1960	Nergaard	315—3.6
3,076,117	1/1963	Boyd	315—5.29 X

ROBERT SEGAL, *Primary Examiner.*

RALPH G. NILSON, GEORGE N. WESTBY, *Examiners.*