United States Patent [19]

Birch

[11] **Patent Number: Des. 299,150**

[45] **Date of Patent: ** Dec. 27, 1988**

[54] **WRITING INSTRUMENT HOLDER**

[75] Inventor: **Brian L. Birch**, Mendota Heights, Minn.

[73] Assignee: **The Birch Company**, Mendota Heights, Minn.

[**] Term: **14 Years**

[21] Appl. No.: **862,607**

[22] Filed: **May 12, 1986**

[52] **U.S. Cl.** **D19/85**

[58] **Field of Search** D19/75–85; 248/539, 504, 514, 222.1; D3/30.1; D6/512

[56] **References Cited**

U.S. PATENT DOCUMENTS

D. 186,746	11/1959	Shea	D19/85
D. 194,894	3/1963	Grushon	D19/77
D. 223,968	6/1972	Collura	D19/84
D. 265,324	7/1982	Hedgeman	D19/85
3,667,708	6/1972	Smeltzer	248/514

Primary Examiner—Charles A. Rademaker
Attorney, Agent, or Firm—Lawrence M. Nawrocki

[57] **CLAIM**

The ornamental design for a writing instrument holder, as shown and described.

DESCRIPTION

FIG. **1** is a side perspective view of a writing instrument holder showing my new design;
FIG. **2** is a right side elevational view thereof;
FIG. **3** is a top plan view thereof;
FIG. **4** is a bottom plan view thereof;
FIG. **5** is a front elevational view thereof; and
FIG. **6** is a rear elevational view thereof.

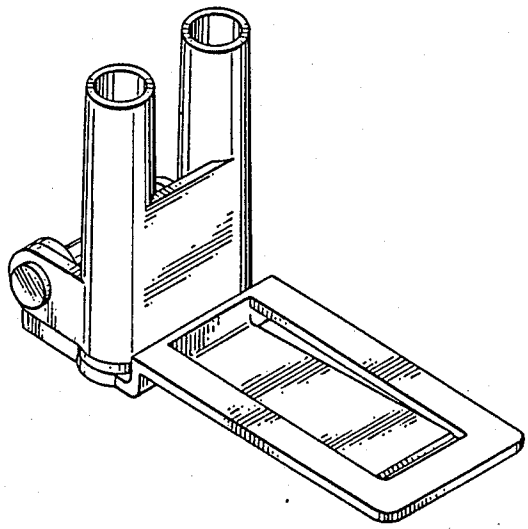

Fig. 1

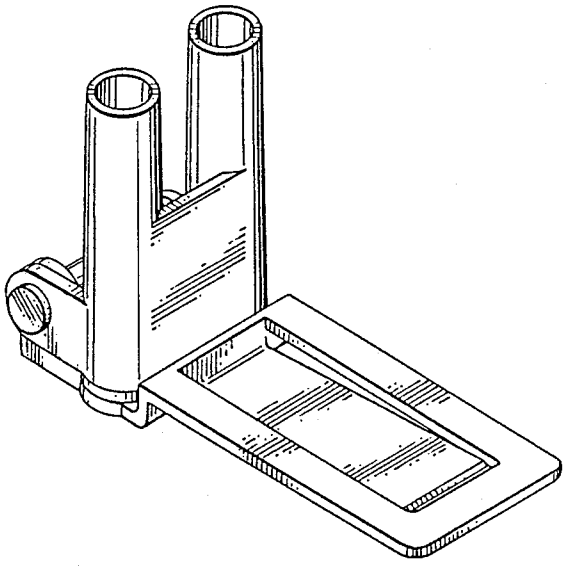

Fig. 2

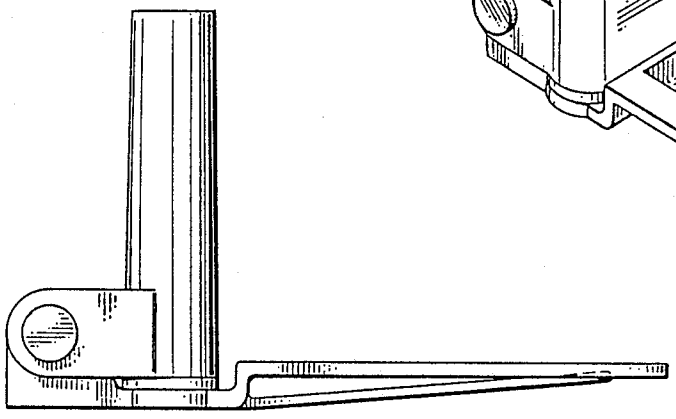

Fig. 5

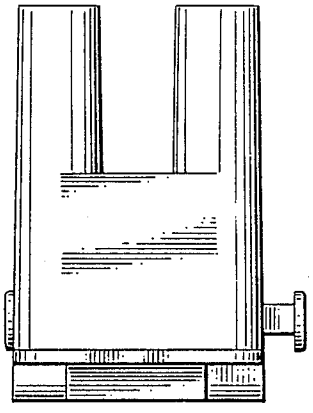

Fig. 3

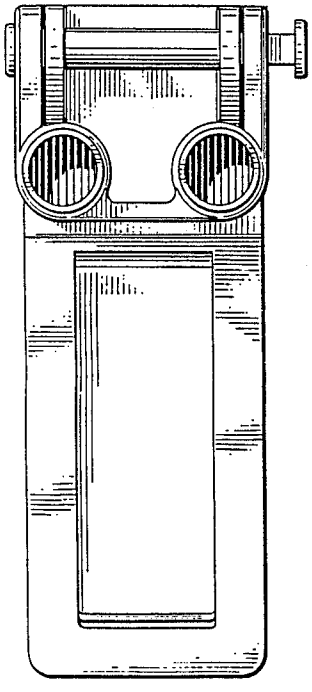

Fig. 4

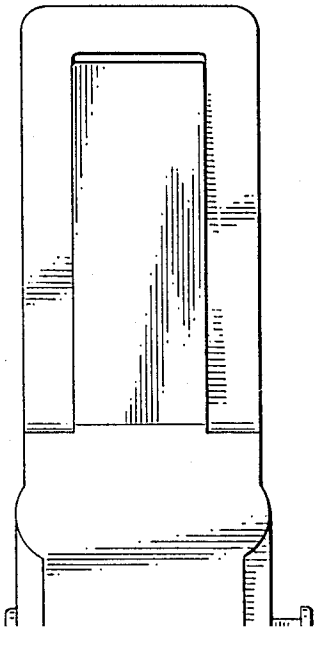

Fig. 6

