US00D765855S

(12) United States Design Patent

Ben-Yehuda et al.

(10) Patent No.: US D765,855 S

(45) Date of Patent: ** Sep. 6, 2016

(54) **DENTAL IMPLANT**

(71) Applicants: **Amos Ben-Yehuda**, Zur Hadassah (IL); **Gabriel Ben-Chetrit**, Beit Zait (IL); **Nir Ben-Chetrit**, Modi'in (IL)

(72) Inventors: **Amos Ben-Yehuda**, Zur Hadassah (IL); **Gabriel Ben-Chetrit**, Beit Zait (IL); **Nir Ben-Chetrit**, Modi'in (IL)

(**) Term: **14 Years**

(21) Appl. No.: **29/490,504**

(22) Filed: **May 9, 2014**

(30) **Foreign Application Priority Data**

Nov. 12, 2013 (EP) 002343541-0002

(51) **LOC (10) Cl.** **24-02**

(52) **U.S. Cl.**
USPC **D24/156**

(58) **Field of Classification Search**
USPC D24/155, 156; D21/385, 386
CPC A61C 8/0089; A61C 8/0069; A61C 8/0054; A61C 8/00; A61C 8/0096; A61C 8/0039; A61C 8/0063; A61C 8/006; A61C 8/0001; A61C 8/0012; A61C 8/0075; A61C 13/225; A61C 8/0025; A61C 8/0068; E01F 9/0122; E01F 9/0124
See application file for complete search history.

(56) **References Cited**

U.S. PATENT DOCUMENTS

1,522,306 A * 1/1925 Lewis A63F 7/22 273/282.1
3,618,556 A * 11/1971 Dittrich ..... E01F 9/0122 116/63 C
D225,970 S * 1/1973 O'Donnell D8/387
4,256,050 A * 3/1981 Barnard ..... E01F 9/0122 116/63 C
D317,200 S * 5/1991 Jorneus D24/156
5,199,813 A * 4/1993 Nagler E01F 9/0122 404/10
D348,412 S * 7/1994 Hazelton D10/113.2
5,375,554 A * 12/1994 Yen ..... E01F 9/0122 116/63 C
5,421,668 A * 6/1995 Cowan ..... E01F 9/0122 116/63 C
5,566,638 A * 10/1996 Rokosny ..... E01F 9/0122 116/63 C
5,888,016 A * 3/1999 Ahn ..... E01F 9/015 116/63 C
D414,556 S * 9/1999 Broberg D24/156
6,338,311 B1 * 1/2002 Ho ..... E01F 9/0122 116/63 C

(Continued)

Primary Examiner — Charles Hanson

(74) *Attorney, Agent, or Firm* — Blue Filament Law, PLLC; Guy Levi

(57) **CLAIM**

The ornamental design for a dental implant, as shown and described.

DESCRIPTION

FIG. **1**, shows a front right perspective view the dental implant embodying our new design;
FIG. **2**, shows a front left perspective view thereof;
FIG. **3**, shows a bottom right perspective view thereof;
FIG. **4**, shows a front elevational view thereof;
FIG. **5**, shows a side elevational view thereof;
FIG. **6** is a top plan view thereof; and,
FIG. **7**, shows a bottom plan view thereof.
The broken lines shown in FIGS. **1-7** depict portions of the dental implant that form no part of the claimed design.
The break lines shown in FIGS. **1-5** depict a break in the claimed design and no part of the break lines or the space between them forms part of the claimed design.
Parallel diagonal lines shading are used to illustrate curvature of the dental implant and show the claimed surfaces and do not connote color.

1 Claim, 4 Drawing Sheets

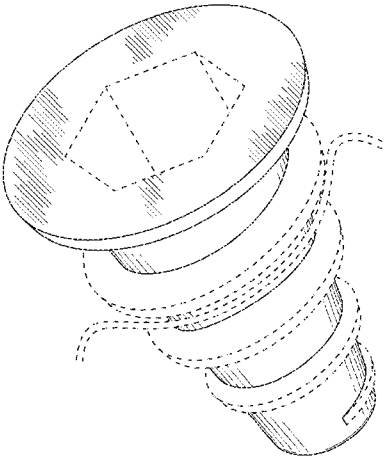

(56) **References Cited**

U.S. PATENT DOCUMENTS

6,556,147 B1 * 4/2003 Fisher ..... E01F 9/0165 116/63 C
6,929,419 B1 * 8/2005 Kuo ..... E01F 9/0122 116/63 C
7,056,055 B1 * 6/2006 Kuo ..... E01F 9/0122 116/63 C
7,228,813 B2 * 6/2007 Flamingo ..... E01F 9/0122 116/63 C
D601,253 S * 9/2009 Kahdemann D24/156
7,811,026 B1 * 10/2010 Kulp ..... E01F 9/0122 116/63 C
7,876,237 B2 * 1/2011 Chen E01F 9/0122 340/907
7,951,045 B1 * 5/2011 Brader A63B 24/0062 434/247
7,997,764 B1 * 8/2011 Nielson E01F 9/0122 340/907
D653,344 S * 1/2012 Bar-Shalom D24/156
D697,560 S * 1/2014 Miller D21/386
D717,435 S * 11/2014 Park D24/156
D717,436 S * 11/2014 Park D24/156
8,925,477 B2 * 1/2015 Wang ..... E01F 9/0122 116/63 C
8,932,059 B2 * 1/2015 Dukhan A61C 8/006 433/174
D727,117 S * 4/2015 Moreau D8/14
9,055,988 B2 * 6/2015 Galgut A61C 8/0001

* cited by examiner

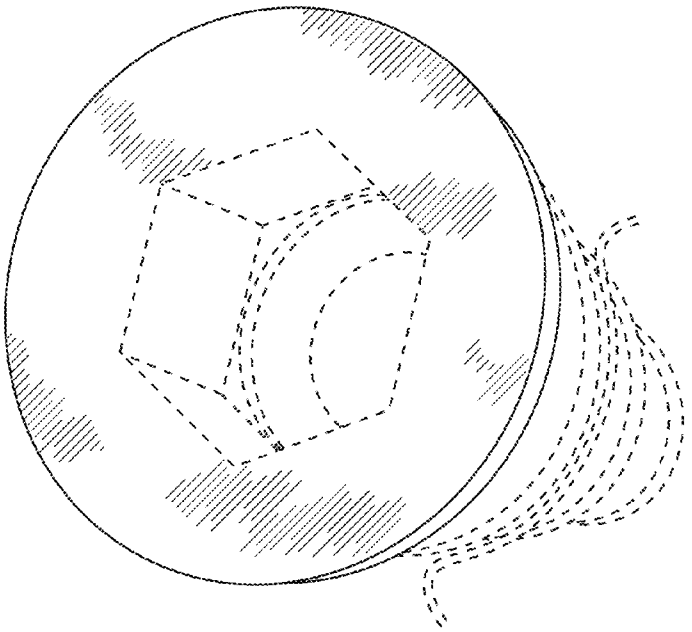

FIGURE 2

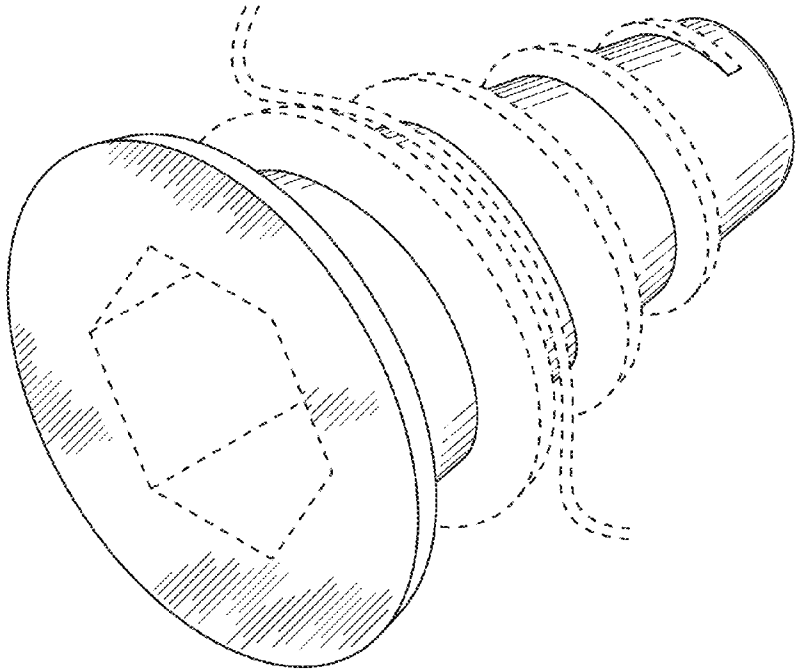

FIGURE 1

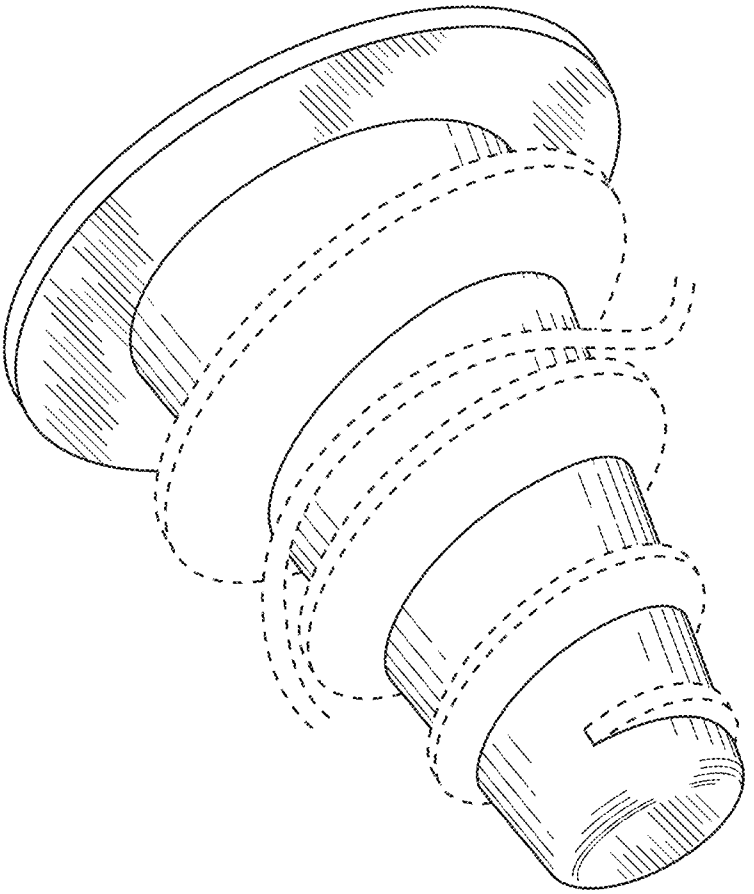

FIGURE 3

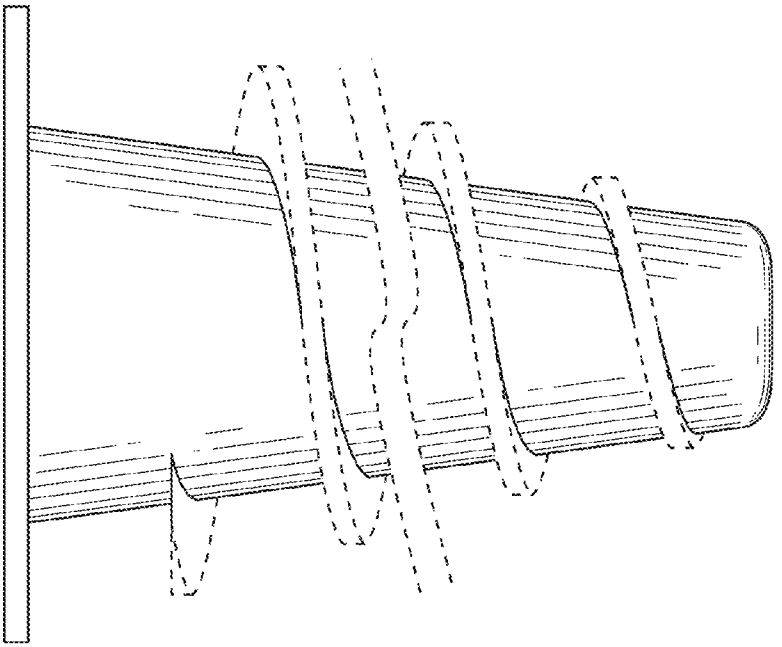

FIGURE 5

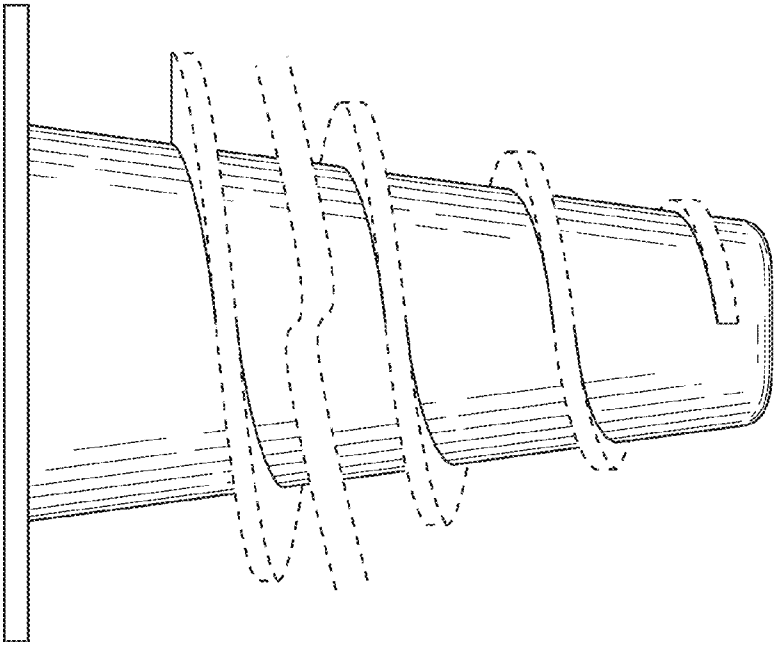

FIGURE 4

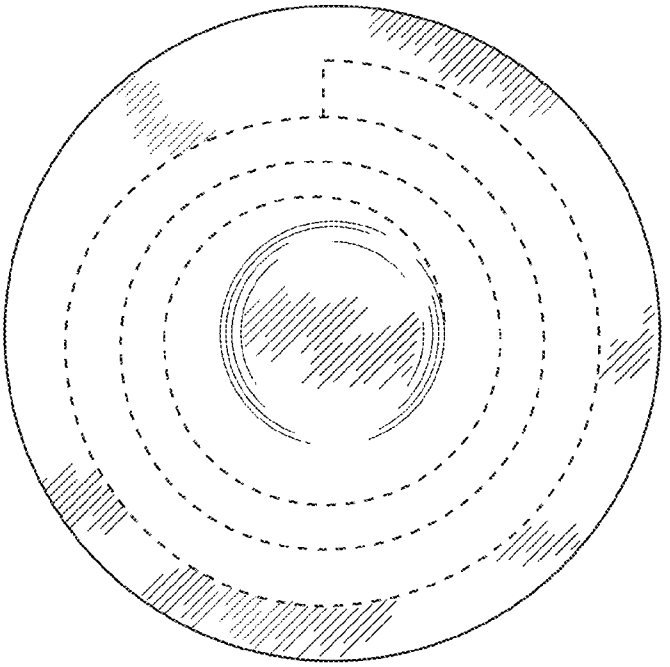

FIGURE 7

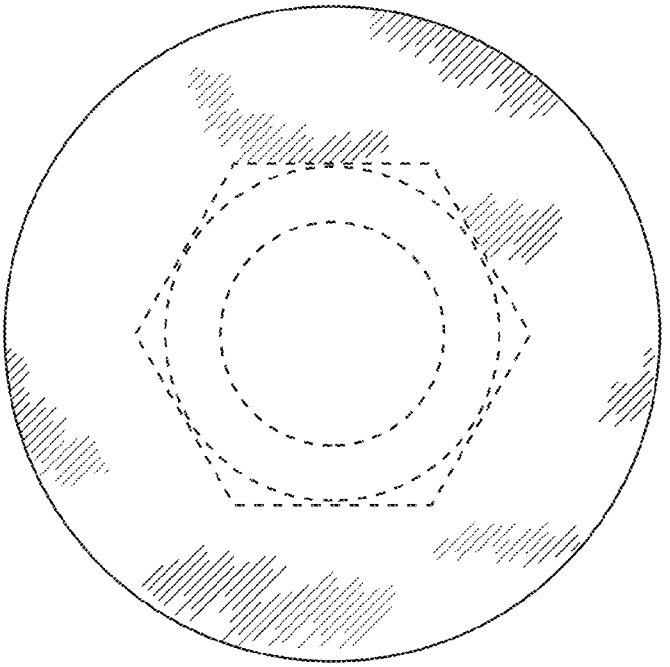

FIGURE 6