(19) Europäisches Patentamt
European Patent Office
Office européen des brevets

(11) EP 1 630 117 A2

# (12) EUROPEAN PATENT APPLICATION

(43) Date of publication:
**01.03.2006 Bulletin 2006/09**

(51) Int Cl.:
***B65H 35/00*** *(2006.01)* ***B26D 7/01*** *(2006.01)*
***B26D 1/04*** *(2006.01)*

(21) Application number: **05076422.4**

(22) Date of filing: **17.06.2005**

(84) Designated Contracting States:
**AT BE BG CH CY CZ DE DK EE ES FI FR GB GR HU IE IS IT LI LT LU MC NL PL PT RO SE SI SK TR**
Designated Extension States:
**AL BA HR LV MK YU**

(30) Priority: **17.06.2004 NL 1026445**

(71) Applicant: **Holding Aldipro B.V.**
**4879NP Etten-Leur (NL)**

(72) Inventor: **Lauwerijssen, Johannes Jacobus Maria**
**4881 BM Zundert (NL)**

(74) Representative: **Hoorweg, Petrus Nicolaas et al**
**Arnold & Siedsma,**
**Sweelinckplein 1**
**2517 GL The Hague (NL)**

## (54) Device for severing one or a number of sheets of material at a time

(57) Device for severing at least one sheet of web material (12) at a time, such as paper and the like, comprising:

- a cutting table (19) over which the web material (12) can be guided and which is provided with a longitudinal groove (60),
- a carriage (13) mounted movably above the cutting table (19), which carriage (13) is provided on the underside with at least one wheel (16,17) for pressing the web material (12) against the cutting table (19) on either side of the longitudinal groove (60), and at least one cutting body (14,15) extending in the vicinity of the at least one wheel (16,17),

wherein the at least one wheel (16,17)and the cutting body (14,15) are fixedly mounted relative to each other, and at least one spring means is provided so as to obtain a spring action between the cutting table (19) on the one hand and wheel (16,17) and cutting body (14,15) on the other.

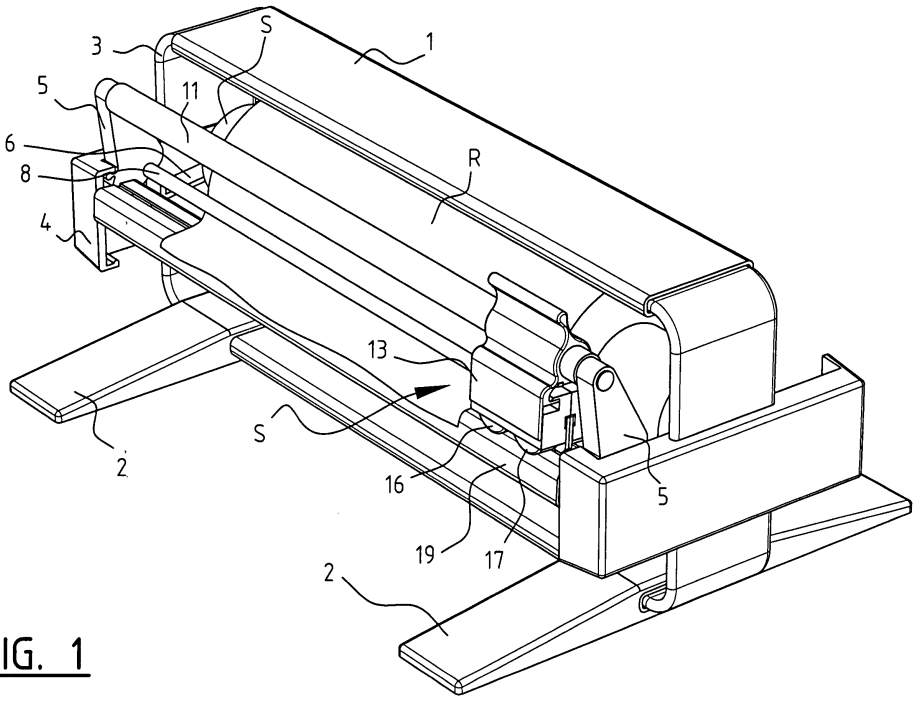


FIG. 1

EP 1 630 117 A2

## Description

**[0001]** The invention relates to a device according to the heading of claim 1. The invention also relates to a cutting means for such a device, comprising a carriage and a sub-frame.

**[0002]** A device is known from US 6,223,639 for cutting a foil, wherein a cutting table has a longitudinal groove which also forms a guide means for a carriage. The carriage comprises a cutting body, wheels and a handgrip. The wheels are arranged spring-mounted in the carriage. A comparable device is known from US 4,960,022.

**[0003]** Known from GB 2 141 371 is a device with a suspension tube to which a carriage is connected, wherein the wheels are received in the carriage for movement relative to a rotating blade under bias of spring means.

**[0004]** The invention has for its object to provide a device with which one or a number of sheets of web material of different types, and in particular stronger web material such as fibrous types of paper of differing thickness, can be severed.

**[0005]** The device of the invention is distinguished for this purpose in that the at least one wheel and the cutting body are fixedly mounted relative to each other, and that at least one spring means is provided so as to obtain a spring action between the cutting table on the one hand and wheel and cutting body on the other.

**[0006]** The wheels of the carriage ensure that the web material is pressed against the cutting table such that the cutting body can engage in a relatively tightly stretched part of the web material. In this manner a neat cut edge is obtained, even in the case of a fibrous web material.

**[0007]** Because the wheel and the cutting body are fixed relative to each other, the position of the cutting body relative to the wheel is fixed. The optimized position of the blade relative to the wheel is hereby maintained. This cutting point of the cutting body preferably lies at the position of the point of contact of the wheel or the wheels with the material for cutting in the direction of movement of the carriage. Surprisingly, the inventor has appreciated that optimizing of this cutting point relative to the material for cutting fixed between the wheels and the cutting table is essential and requires great precision. This in contrast to the known prior art devices, wherein wheels and blade are movable relative to each other.

**[0008]** By applying the spring means in order to obtain a spring action between the cutting table on the one hand and wheel and cutting body on the other hand, a continuous pressure is maintained on the material for cutting. This pressure is then no longer dependent on a person and/or material. Pressure exerted by a person is very variable. This depends on the person as well as the placing of the device. Application of spring means is essential, in particular also in the case of a mechanical cutting movement.

**[0009]** According to the preferred embodiment, wheel and cutting body are fixedly arranged on a sub-frame which is connected to the carriage. In this manner a first spring means can be arranged in simple manner between sub-frame and carriage. The carriage is preferably provided with a handgrip for manual operation by a user. By moving the carriage the sub-frame with wheel and cutting body can hereby move relative to the moved carriage under bias of the springs. A better cutting result is hereby achieved. A favourable cutting result without fraying and other disadvantageous factors is achieved by optimizing the location of the cutting point relative to the wheels.

**[0010]** According to a further preferred embodiment, the sub-frame has at least one longitudinal profiling in cross-section and the carriage has at least one longitudinal profiling in cross-section, wherein both profiles can engage on each other. According to a particular embodiment the sub-frame is slidable in the carriage. A carriage/sub-frame assembly is hereby obtained which can be manufactured easily, and which can be readily assembled and disassembled.

**[0011]** According to a further embodiment, the carriage has a receiving chamber in cross-section and at least one protruding part of the sub-frame can be received in this chamber. The sub-frame is connected to the carriage in this manner. This is preferably a T-shaped protruding part of the sub-frame which is substantially received with the wings of the T in the chamber.

**[0012]** The sub-frame is preferably provided with spring means which can be received in the receiving chamber of the carriage. The spring means can for instance be wings mounted on the sub-frame or spiral springs arranged between carriage and sub-frame. The components of the sub-frame can be manufactured integrally during manufacture. According to a preferred embodiment, the sub-frame is formed by injection moulding. The sub-frame or components thereof can also be formed by mechanical processes from a block of plastic or aluminium. The sub-frame can then also be made from different materials.

**[0013]** According to a favourable embodiment, the sub-frame has a cross-sectional profile which is provided with a longitudinal receiving chamber. The cutting body, which is preferably provided with a complementary profile, can be placed in this longitudinal receiving chamber. The cutting body can for instance is hereby slide or snap with its profile into the longitudinal receiving chamber.

**[0014]** According to an embodiment, the sub-frame is provided with a wheel which is also a cutting body. Such an embodiment is known from WO 94/02400, which patent application is incorporated in this text by way of reference. The wheel has a cylinder shape with a disc-shaped protrusion in the centre.

**[0015]** In the preferred embodiment according to the invention the device is characterized as according to claim 6. A device is hereby obtained wherein the guiding of the carriage takes place above the cutting table. Such a device is easy to manufacture.

**[0016]** A further embodiment provides a carriage which in cross-section has at least one receiving chamber in which the suspension tube can be received. The

carriage or the carriage housing can hereby be connected to the suspension tube.

**[0017]** According to another embodiment, the spring means are arranged between the suspension tube and the cutting table. This also ensures that wheels and cutting body cannot move relative to each other, while the desired resilient properties can still be obtained.

**[0018]** According to yet another embodiment, the cutting table is spring-mounted relative to cutting body and wheel. The cutting table is hereby spring-mounted relative to the suspension tube fixedly connected to a frame and/or the carriage or sub-frame.

**[0019]** According to a preferred embodiment, the invention relates to a device for severing one sheet of web material at a time from web material wound onto at least one roll (R), which device further comprises a frame and a spindle for the roll supported by the frame. A device is hereby obtained which in its entirety can function as a sheet-dispensing device with cut sheets.

**[0020]** According to a preferred embodiment, the cutting table is received at either end in a profile part in each case, which two profile parts can be snapped into mounting elements arranged on either side of the frame. Such a profile part is manufactured for instance by injection moulding, and is generally provided with a number of chambers and/or protruding parts in which or over which the outer ends of the different elements of the cutting means can be arranged.

**[0021]** According to a possible embodiment variant, there is provided a guide tube which is arranged substantially parallel to the spindle and which is mounted between roll R and the cutting table, wherein the web material can be guided under the guide tube and onto the cutting table. In this manner it can be ensured that the web material comes to lie flat on the table and makes contact with the cutting table over substantially the whole cutting table surface. The guide tube can be received at both ends in the profile parts.

**[0022]** According to an embodiment, the cutting body is provided with a cutting point which acts in the vicinity of and, as seen in the direction of movement, just in front of the contact surface between the wheels and the cutting table. The web material is hereby pressed tightly against the cutting table at the moment that the cutting point cuts into the web material.

**[0023]** The carriage can be provided with a front pair and a rear pair of adjacently arranged wheels, between which the at least one cutting body is situated. In this case the cutting body is preferably provided with a front and a rear cutting point, which front and rear cutting point acts between respectively the front and rear pair of wheels and in the vicinity of the contact surface between respectively the front and rear pair of wheels and the cutting table. In this manner the carriage can perform a good cutting operation in two directions.

**[0024]** According to a further developed embodiment, the device has the feature of claim 13. The web material for cutting is hereby held even tauter, thus providing an even better cutting result.

**[0025]** The at least one cutting body preferably comprises a knife blade which is fixed in a knife holder arranged in the carriage. In this manner the knife holder with knife blade can be easily replaced when the knife blades are worn.

**[0026]** The wheel or the wheels are for instance mounted in a wheel holder which is arranged spring-mounted in the carriage by means of the spring means, such as a leaf spring. In this way the cutting means continue to function properly even when the web material displays unevenness, and the cutting means can be used for web material of different thicknesses.

**[0027]** The invention further relates to a cutting means for a device according to any of the foregoing claims, wherein the cutting means comprises a sub-frame which has at least one wheel and at least one cutting body and a carriage, wherein the carriage and sub-frame can be coupled and spring means are arranged between carriage and sub-frame. Such a carriage has optimal cutting properties between wheels and knife, while the carriage can move resiliently over the material for cutting.

**[0028]** The invention will be further elucidated on the basis of the accompanying drawings and the following figure description of a non-limitative exemplary embodiment of the invention. In the drawing:

fig. 1 is a perspective view of an embodiment of a device according to the invention;
fig. 2 is a perspective detail view of profile part 5 and carriage 13 of figure 1;
fig. 3 shows a perspective view of the carriage in disassembled situation;
fig. 4 shows a front view of a knife holder which is placed in a wheel holder;
fig. 5 is a perspective view of a second embodiment;
fig. 6 is a front view of a knife holder which is placed in the wheel holder according to a second embodiment.

**[0029]** The embodiment of figure 1 consists of a collective frame consisting substantially of a rectangular bracket 1. Bracket 1 is provided with supports 2 to enable bracket 1 to be held vertically. Bracket 1 and supports 2 can of course be embodied differently, and we refer to previous patents NL 194079, EP 0419735 for other possible embodiments, many variants of which will of course be self-evident to the skilled person.

**[0030]** Arranged along vertical uprights 3 of bracket 1 are mounting elements 4, which serve on the one hand to receive the roll R of any web material 12, and on the other hand for snapping suspension in each case of a profile part 5 in which a cutting table 19, a suspension tube 11 and a guide tube 8 are accommodated. The web material 12 wound onto roll R is guided under guide tube 8 toward and over cutting table 19.

**[0031]** Roll R has a hollow core through which a spindle (not shown) is passed. The spindle can also consist of

two parts around which the roll is wound. When the roll is used up the spindle cannot be reused. The spindle has a length such that it is arranged with the outer ends thereof on a guide member in the form of a guide surface 6. This guide surface 6 slopes downward in the direction of the cutting means.

**[0032]** The cutting means are arranged on a releasable second frame which can be connected to frame 1. The releasable second frame is shown in its entirety in figure 2 and designated generally with reference numeral 70.

**[0033]** The cutting means comprise a cutting table 19 over which web material 12 can be guided and a carriage 13 mounted movably thereabove. Carriage 13 is provided on the underside with a front and a rear pair of adjacently mounted wheels 16, 17 for pressing web material 12 against the cutting table.

**[0034]** Note that the same frame can be used for the device of the present invention as for the device described in NL 1034073. As will become further apparent, the cutting means according to the invention can be removed in simple manner from the device and replaced by other cutting means, for instance those described in NL1034073.

**[0035]** Profile part 5 and carriage 13 are shown in detail in figure 2.

**[0036]** Each profile part 5 is embodied on one side with a protruding rib 7 such that the profile part can be snapped into mounting element 4 in simple manner. The second frame 70 can thus be easily replaced. Different frame parts with their own cutting properties can hereby be readily accommodated in a frame 1. The cutting properties of second frame 70 can be adapted to the properties of the material of roll R.

**[0037]** Each profile part is provided with a first chamber for receiving an outer end of suspension tube 11 and with a second chamber for receiving an outer end of guide tube 8. Each profile part 5 is finally provided with a protruding part over which an outer end of cutting table 19 is arranged.

**[0038]** Carriage 13 is suspended movably from a suspension tube 11 which is mounted substantially parallel to the spindle for roll R and fixed at either end in profile parts 5. The carriage is provided with a handgrip 18, whereby the operator of the device can easily move the carriage reciprocally. Suspension tube 11 is received in receiving chamber 54 of the carriage.

**[0039]** The cutting body is provided with two knife blades 14, 15 which each have a cutting point acting in the vicinity of and, as seen in the direction of movement, in front of the contact surface between respectively the front and rear pair of wheels 16, 17 and the cutting table. This can be seen more clearly in figure 4. This avoids the possibility of the paper creasing or sliding away at the moment the cutting point cuts into the web material. By providing the carriage with two pairs of wheels 16, 17 and a cutting point associated with each pair of wheels, a smooth severing of one sheet of web material 12 at a time is obtained in both directions of movement of carriage 13.

**[0040]** The cutting table is provided with a groove 60 and the cutting points of knife blades 14, 15 extend into this groove 60.

**[0041]** It is of course also possible to equip the carriage with only one pair of wheels and one associated cutting point, but in this case the carriage can only be used in one direction of movement to sever a sheet of web material, and must therefore be returned before each cutting operation to the same extreme right or extreme left starting position for a cutting point acting respectively on the left or right-hand side of the pair of wheels.

**[0042]** The construction of carriage 13 will now be further elucidated with reference to figure 3. Carriage 13 is assembled from a suspension part 50, a wheel holder 61 and a knife holder 62. The assembled part of the two wheel holders 61 and knife holder 62 form a sub-frame which is accommodated in carriage 13 and in which the knife is fixed relative to the wheels so that optimal cutting properties are achieved. The optimal cutting properties depend on the type of paper. Hereinbelow a first embodiment will be shown in figures 3 and 4 and a preferred embodiment in figures 5 and 6. The wheel holders with knife body form a sub-frame as according to claim 1.

**[0043]** Knife holder 62 consists of a left and right-hand part 20, 30 which can be mounted in wheel holder 61. The left-hand part 20 is provided with openings 21-26 which can co-act with pins 31-36 of right-hand part 30. Knife blades 14, 15 are thus placed between the left and right-hand part 20, 30 of the knife holder, wherein pins 31-36 protrude through the corresponding openings 21-26, whereafter the pins are fused together with the openings. The left and right-hand parts 20, 30 are provided at the bottom with triangular knife protectors 27, 37 which prevent the knife blades 14, 15 colliding with the sides of groove 60.

**[0044]** The knife holder is slidable in a wheel holder 61, which can for instance consist of two identical parts 40. These parts are mounted in suspension part 50.

**[0045]** A wheel holder part 40 consists of a substantially beam-like part which is provided with a recess 47 in longitudinal direction in a first longitudinal surface. The wheel holder part is further provided in each case with openings for a wheel shaft of a pair of wheels. Finally, in a first top corner of a second longitudinal surface a pin 41 is arranged opposite the first longitudinal surface, and a suitable opening 46 is provided in the other top corner of this second longitudinal surface such that, when two identical wheel holder parts are placed back to back (with recess 47 on the outside), pin 41 of one of the parts fits into opening 46 of the other part.

**[0046]** The suspension part 50, which is movable over suspension tube 11, will now be described. The suspension part is formed with a lengthwise cavity 54 through which suspension tube 11 fits. On the top the suspension part is provided with a handgrip 18 for moving the carriage reciprocally. On the bottom the suspension part is formed as a downward opening U-shaped part with two side walls

(legs of the U) 52. Side walls 52 are provided on the inside with ribs 51 which can co-act in each case with a recess 47 of wheel holder 61, as shown in figure 2.

**[0047]** The wheel holder can be suspended in spring-mounted manner so as to also obtain a neat cutting edge in the case of unevenness in the web material. For this purpose spring means, such as a number of leaf springs 63, can be provided between the top side of wheel holder 61 and the middle part 55 of the U-shaped part of suspension part 50. Finally, the two wheel holder parts 40 can be locked relative to each other using a lock 64. In this manner the sub-frame of the wheel holder with knife becomes movable independently of the carriage.

**[0048]** Figures 5 and 6 show a second embodiment. Carriage 80 differs little from carriage 18. Carriage 80 is provided with an elongate opening in vertical direction 81, into which a pin 82 can be placed. By placing the pin 82, which protrudes through opening 81, through openings 83 and 84 in the two respective wheel holders 85 and 86 and which is also received in the semicircular recess 87 in knife body 88, the respective parts which can be pushed into each other are locked relative to each other in transverse direction. The elongate form of opening 81 in carriage 80 enables movement in the vertical direction as according to arrow 89 of the sub-frame 90 formed by the two wheel holders and knife body 87.

**[0049]** The wheel holders are provided with a longitudinal profiling 91 whereby the formed sub-frame 90 is slidable on the flanges 92 of carriage 80.

**[0050]** The sub-frame has a longitudinal receiving chamber 93 into which can slide the knife body with a profile 94. The knife body is hereby placed between wheels 95-98 which are placed on the shafts, two of which are placed visibly on a shaft 99,100 of the wheel holders.

**[0051]** The two wheel holders are connected to each other by means of screws, of which one screw 100 is visible.

**[0052]** Knife body 88 comprises a knife 102 which is received between knife protector 103. An elliptical body 104 is fixed on the underside to the knife protector and can be received in the longitudinal groove of the cutting table. An additional guiding is hereby obtained.

**[0053]** Figure 6 shows the placing of the knife body in the wheel holders, and therewith of the sub-frame in carriage 80. It can be seen that cutting point 105 of knife 102 lies practically flush with the points of contact between the wheels and the material for cutting. Improved properties are hereby obtained for the cutting. Because the knife is fixed relative to the wheels, the cutting properties are not changed when force is exerted on the carriage. The exertion of a force on the carriage enables the use of spring means 104, again leaf springs, whereby adjustments to for instance unevenness in the material for cutting can take place.

**[0054]** According to an embodiment (not shown) the suspension tube 11 is connected to profile part 5, and thus to the frame, by means of spring means. The favourable properties of the spring means are hereby also achieved. In yet another embodiment, cutting table 19 is connected in spring-mounted manner to profile part 5, and thus to the frame.

**[0055]** The skilled person will of course appreciate that other possible embodiments of carriage 13 are possible, and that this latter can be mounted movably above the cutting table in ways other than with a suspension tube. The scope of protection of the invention is therefore not limited to the above described embodiment variants, but is defined by the following claims.

## Claims

**1.** Device for severing at least one sheet of web material (12) at a time, such as paper and the like, comprising:

- a cutting table (19) over which the web material can be guided and which is provided with a longitudinal groove (60),
- a carriage (13) mounted movably above the cutting table, which carriage is provided on the underside with at least one wheel (16, 17) for pressing the web material against the cutting table on either side of the longitudinal groove, and at least one cutting body (14, 15) extending in the vicinity of the at least one wheel,

**characterized in that**
the at least one wheel and the cutting body are fixedly mounted relative to each other, and that at least one spring means is provided so as to obtain a spring action between the cutting table on the one hand and wheel and cutting body on the other.

**2.** Device as claimed in claim 1, **characterized in that** the wheel and cutting body are fixedly arranged on a sub-frame (61, 62) which is connected to the carriage.

**3.** Device as claimed in claim 2, **characterized in that** a first spring means (63; 104) is arranged between the sub-frame and the carriage.

**4.** Device as claimed in any of the claims 1-3, **characterized in that** the sub-frame (61, 62; 90) has at least one longitudinal profiling (47; 91) and the carriage (50; 80) has at least one longitudinal profiling (51; 92) co-acting therewith.

**5.** Device as claimed in any of the claims 1-3, **characterized in that** the carriage (50) is provided with a receiving chamber.

**6.** Device as claimed in any of the claims 2-5, **characterized in that** the sub-frame has a cross-sectional profile which is provided with a longitudinal receiving chamber (93) in which the cutting body, preferably

a knife holder with at least one knife blade received therein, can be placed, which cutting body is preferably at least provided with a complementary profile.

**7.** Device as claimed in any of the foregoing claims, **characterized in that** the carriage is suspended movably by means of a suspension tube (11) extending above the cutting table parallel to the longitudinal groove.

**8.** Device as claimed in claim 7, **characterized in that** the suspension tube (11) is spring-mounted relative to the cutting table by means of a spring means.

**9.** Device as claimed in any of the foregoing claims for severing at least one sheet of web material at a time from web material wound onto at least one roll (R), **characterized in that** the device comprises a frame (1), and a spindle (10) for the roll (R) supported by the frame.

**10.** Device as claimed in claim 9, **characterized in that** there is provided a guide tube (8) which is arranged substantially parallel to the spindle (10) and which is mounted between the roll (R) and the cutting table, wherein the web material can be guided under the guide tube and onto the cutting table.

**11.** Device as claimed in any of the foregoing claims, **characterized in that** the carriage is provided with at least one front pair and one rear pair of adjacently arranged wheels, between which the at least one cutting body is situated.

**12.** Device as claimed in any of the foregoing claims, **characterized in that** as seen in transverse direction at least two wheels are provided in each case on either side of the cutting body, wherein a belt, for instance a caterpillar track, is arranged around each at least two wheels.

**13.** Device as claimed in claim 11, **characterized in that** the at least one cutting body is provided with a front and a rear cutting point, which front and rear cutting point acts between respectively the front and rear pair of wheels and in the vicinity of the contact surface between respectively the front and rear pair of wheels and the cutting table.

**14.** Cutting means for a device as claimed in any of the foregoing claims, which comprises a sub-frame which has at least one wheel and at least one cutting body, and a carriage, wherein carriage and sub-frame can be coupled and spring means are arranged between carriage and sub-frame.

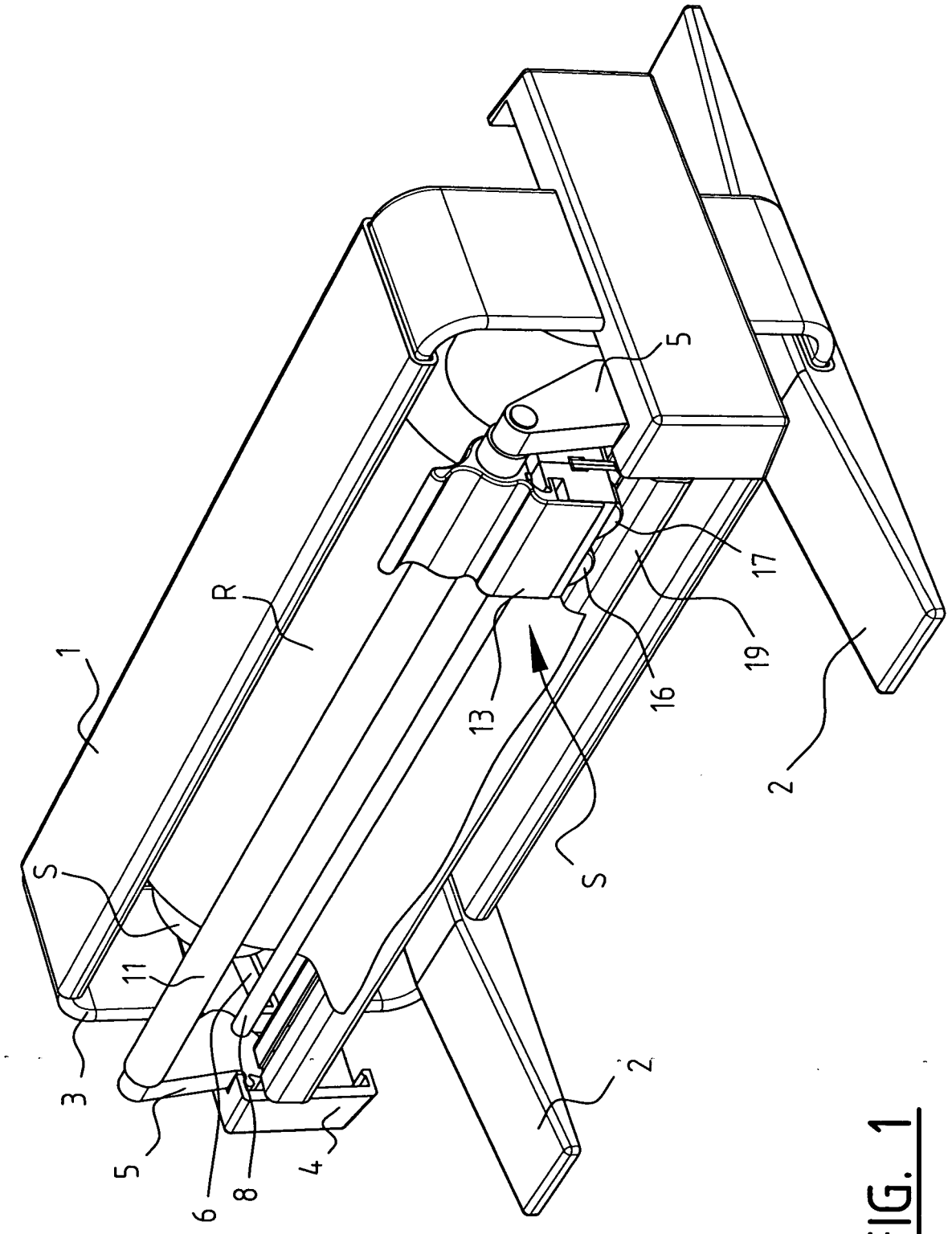


FIG. 1

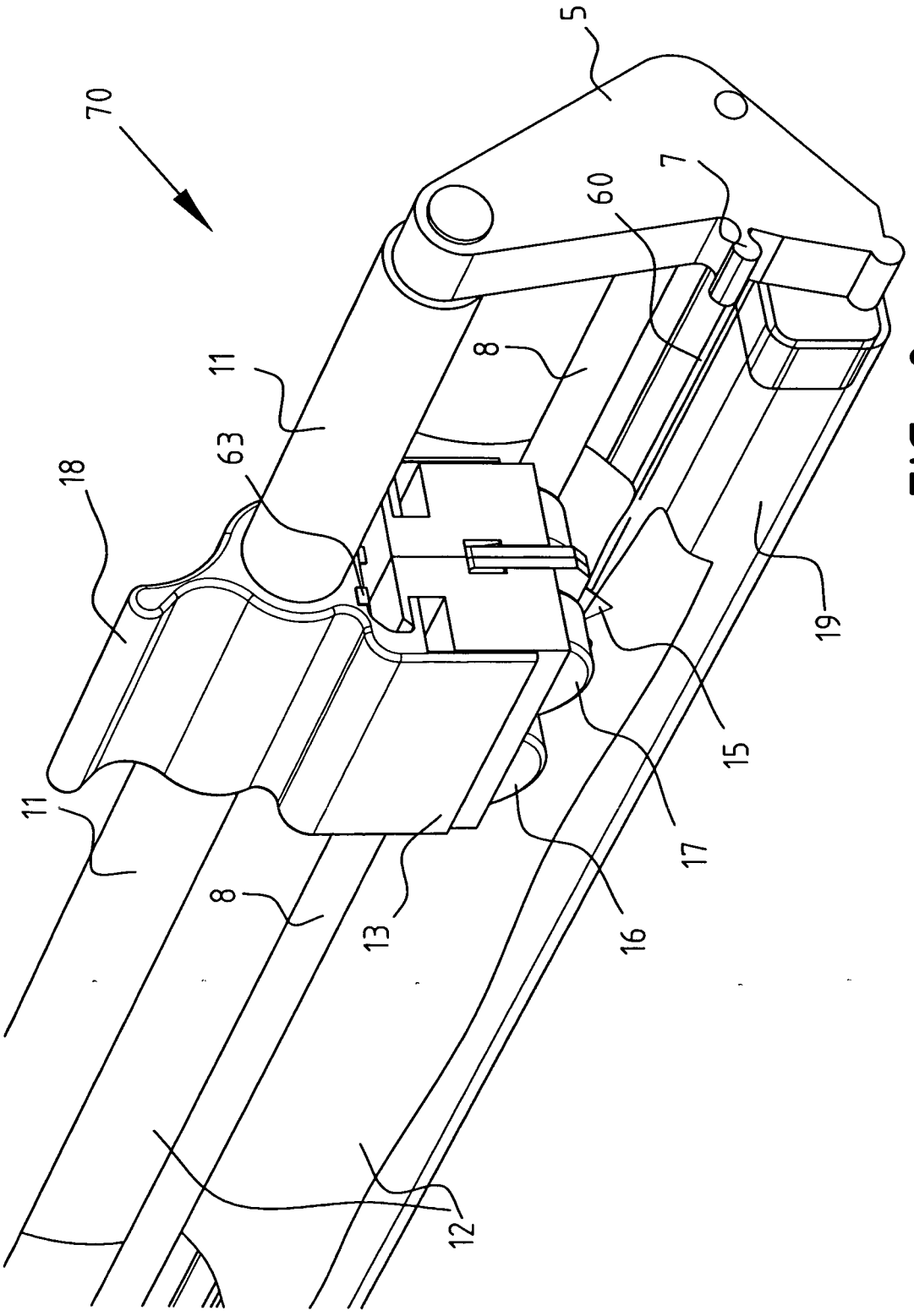


FIG. 2

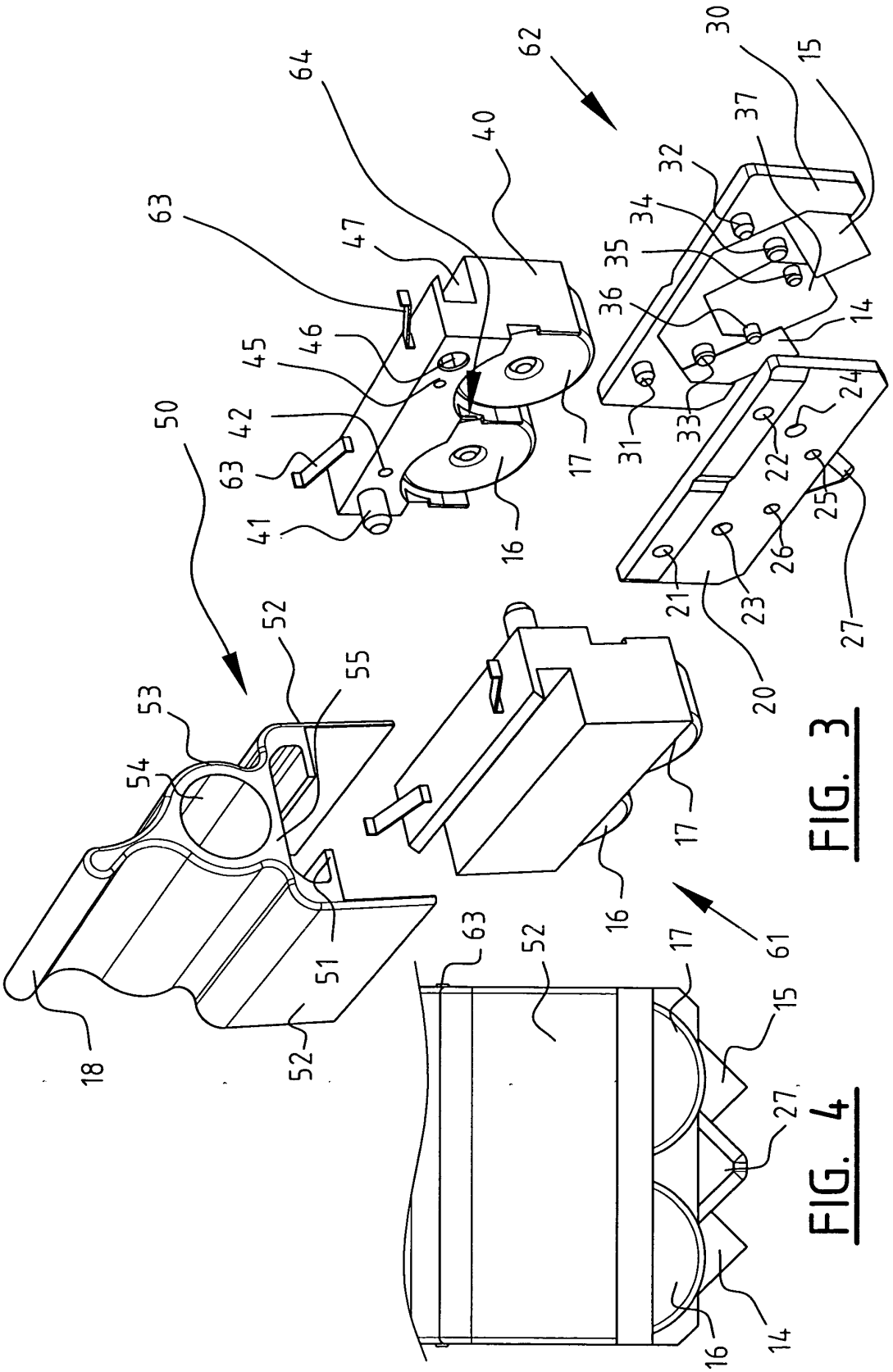
50
52
53
54
55
51
18
52
63
64
40
47
46
45
42
63
41
16
17
62
30
15
37
32
34
35
36
14
31
33
24
22
25
26
21
23
20
27
17
16
61
63
52
17
15
27
16
14

FIG. 3

FIG. 4

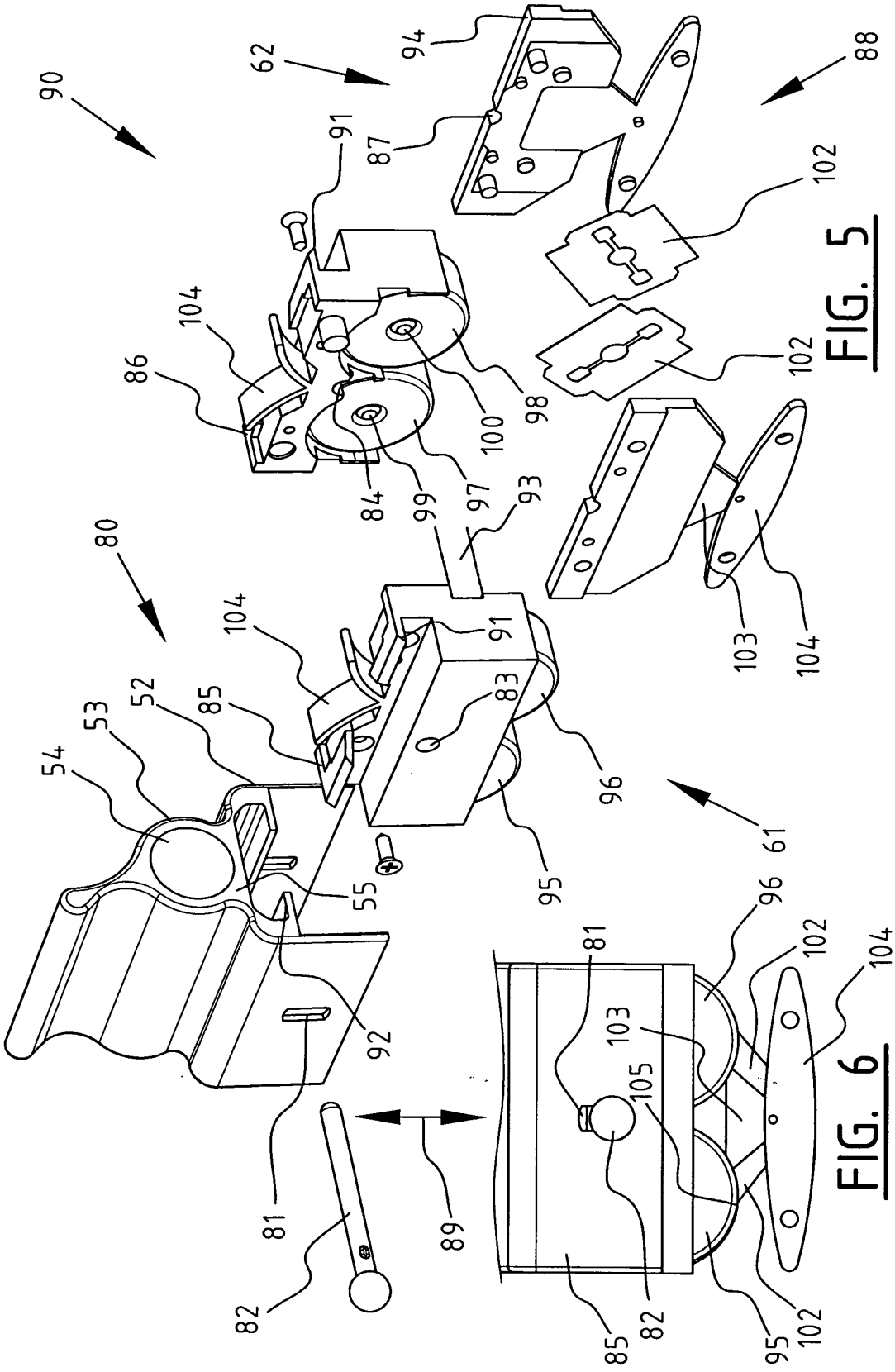
90
62
94
87
91
88
102
104
86
100
98
84
99
97
93
80
104
91
83
52
85
53
54
96
61
95
55
92
81
89
82
103
104
96
102
104
81
103
105
82
85
95
102

FIG. 5

FIG. 6