US 20100199556A1

(19) United States

(12) Patent Application Publication

Dighe et al.

(10) Pub. No.: US 2010/0199556 A1

(43) Pub. Date: Aug. 12, 2010

(54) PLASMA GASIFICATION REACTOR

(76) Inventors: **Shyam V. Dighe**, North Huntingdon, PA (US); **Mark F. Darr**, Acme, PA (US); **Ivan A. Martorell**, Delmont, PA (US); **Pieter van Nierop**, (US); **Aleksandr Gorodetsky**, (US); **Richard Dale Bower**, (US)

Correspondence Address:
Shyam V. Dighe
Westinghouse Plasma Corporation
P.O. Box 410, Plasma Center, Waltz Mill Site
Madison, PA 15663 (US)

(21) Appl. No.: **12/378,166**

(22) Filed: **Feb. 11, 2009**

Publication Classification

(51) **Int. Cl.**
C10J 3/18 (2006.01)

(52) **U.S. Cl.** **48/65**

(57) **ABSTRACT**

A plasma gasification reactor vessel having a top section with a conical wall extending up from a bottom section, containing a carbonaceous bed into which plasma is injected by plasma torches, to a roof of the vessel is arranged in ways that can contribute to characteristics of gas flow and solids residence time that are favorable for thoroughness of reactions and yield of useful reactions products. In some cases, such a conical wall is combined in arrangements with other features such as one or more feed ports arranged to give more uniform distribution including examples with a feed port that has a distributive feed mechanism. The roof of the vessel, in some examples, has vertical outlet ports that include intrusions into the interior volume of the reactor proximate the conical wall of the top section. The configurations of outlet ports with intrusions and the configurations of feed ports for more uniform distribution of feed material are also applicable to reactor vessels with other geometries.

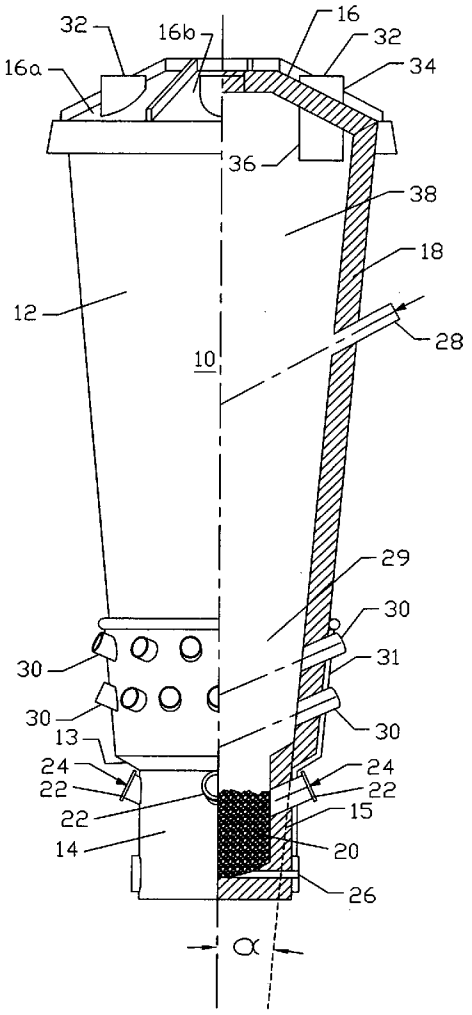

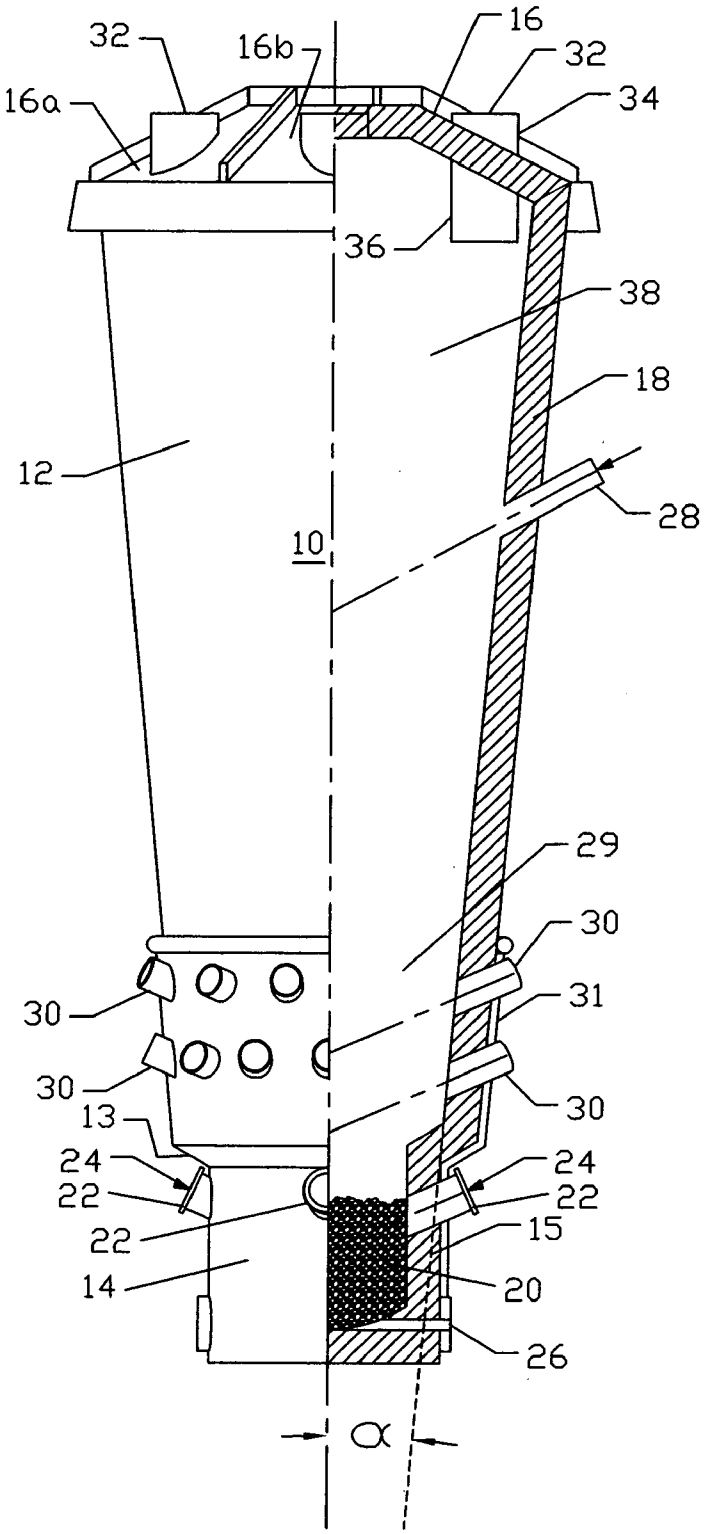
32
16b
16
32
16a
34
36
38
18
12
28
10
29
30
31
30
30
30
13
24
24
22
22
22
15
14
20
26
α

Figure 1

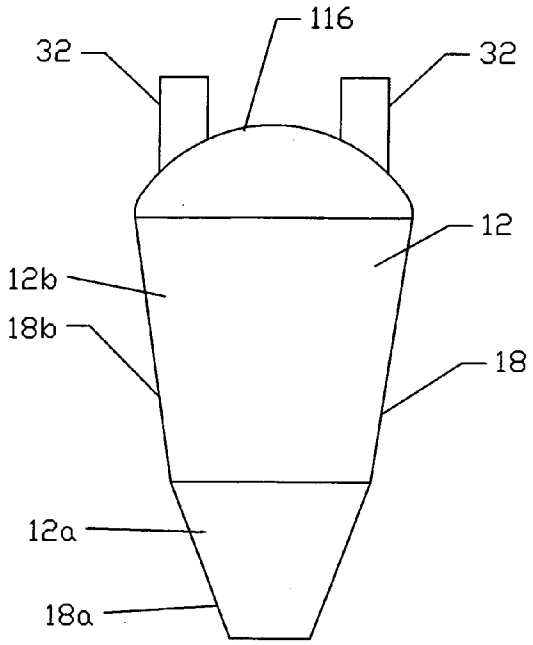

Figure 2

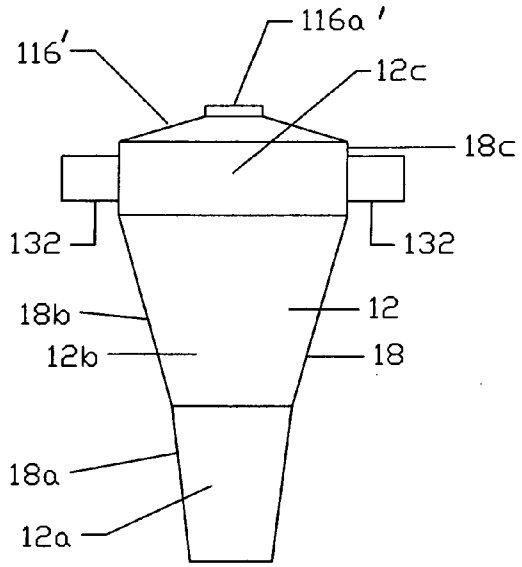

Figure 3

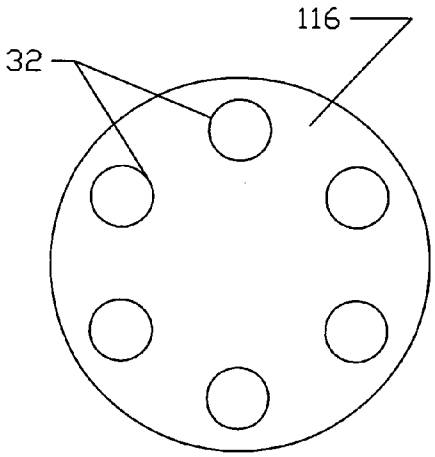

Figure 4

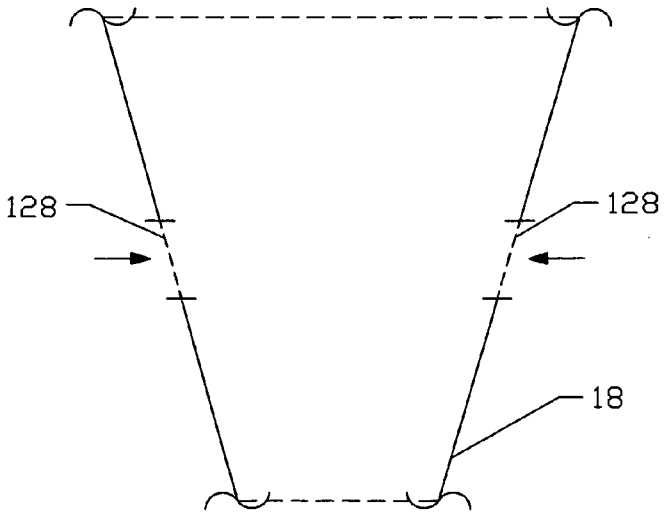

Figure 5

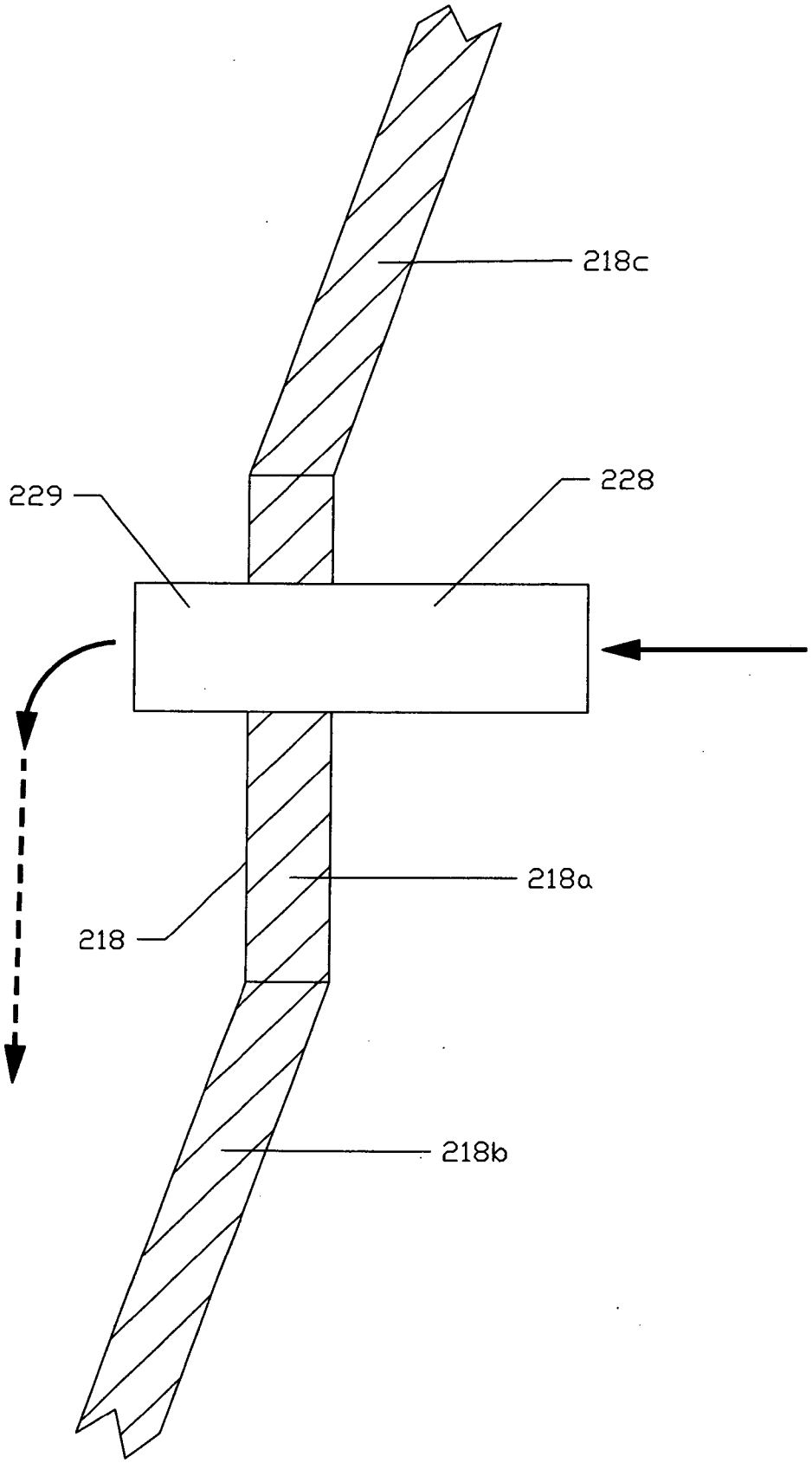

Figure 6

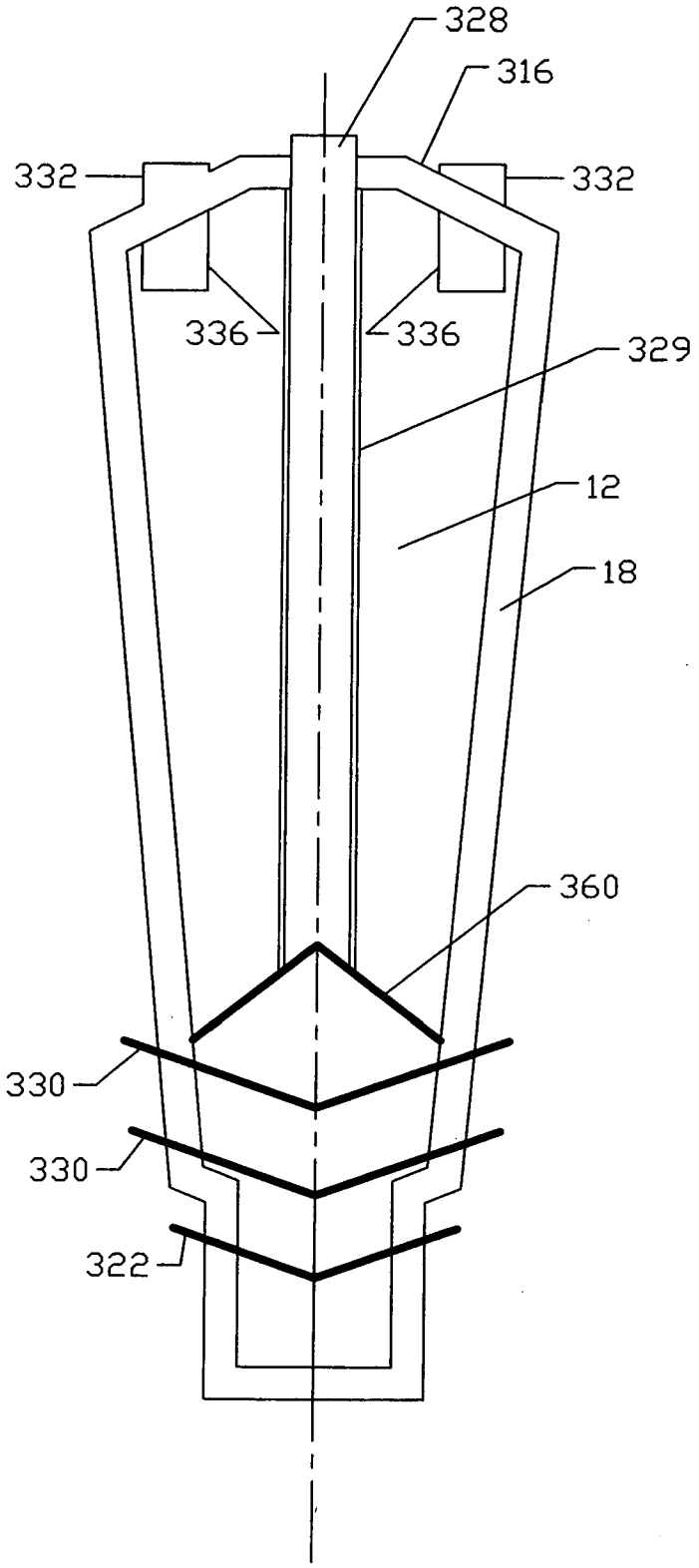

Figure 7

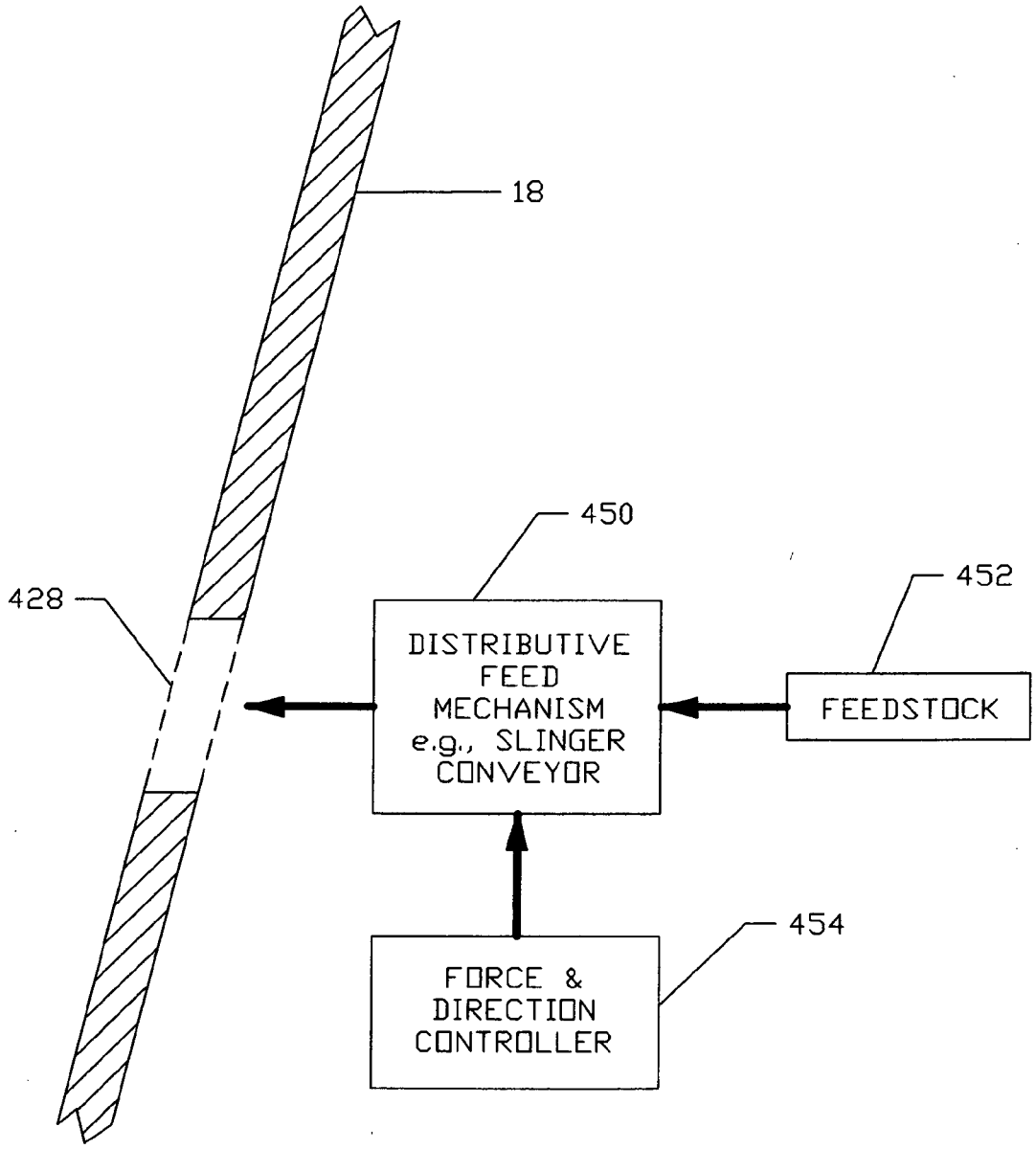
18
450
452
428
DISTRIBUTIVE FEED MECHANISM e.g., SLINGER CONVEYOR
FEEDSTOCK
454
FORCE & DIRECTION CONTROLLER

Figure 8

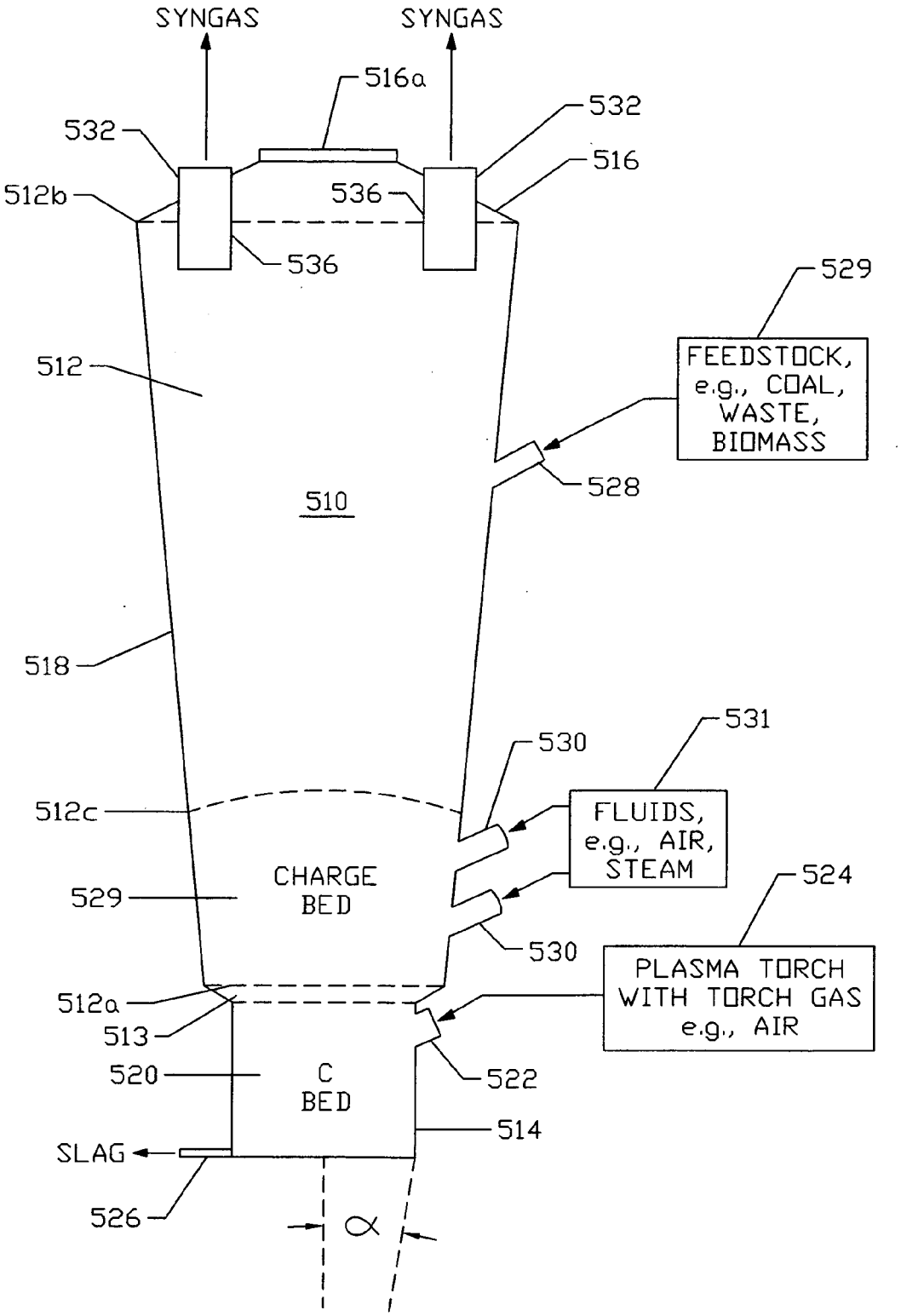
SYNGAS
SYNGAS
516a
532
532
516
512b
536
536
529
512
FEEDSTOCK, e.g., COAL, WASTE, BIOMASS
528
510
518
531
530
512c
FLUIDS, e.g., AIR, STEAM
CHARGE BED
529
524
530
PLASMA TORCH WITH TORCH GAS e.g., AIR
512a
513
520
C BED
522
514
SLAG
526
α

Figure 9

PLASMA GASIFICATION REACTOR

FIELD OF THE INVENTION

[0001] The invention relates to plasma gasification reactors with features that can facilitate processes such as syngas production particularly including reactor outlet port configurations in combination with other aspects of plasma gasification reactors and systems in which they are used.

COMPANION APPLICATIONS

[0002] The present application is related in subject matter to commonly assigned applications (Docket Nos. 2008WP2 and 2008WP4) being filed on the same date as the present application. The three applications disclose reactor vessel features and combinations including reactor vessel geometries, outlet port (or exhaust port) configurations, and material feed port configurations also subject to independent utility.

BACKGROUND

[0003] This background is presented to give a brief description of the general context of the invention.

[0004] Plasma gasification reactors (sometimes referred to as PGRs) are known and used for treatment of any of a wide range of materials including, for example, scrap metal, hazardous waste, other municipal or industrial waste and landfill material to derive useful material, e.g., metals, or to vitrify undesirable waste for easier disposition. Interest in such applications continues. (In the present description "plasma gasification reactor" and "PGR" are intended to refer to reactors of the same general type whether applied for gasification or vitrification, or both.)

[0005] Along with the above-mentioned uses, PGRs are also adaptable for fuel reforming or generating gasified reaction products that have applicability as fuels, with or without subsequent treatment.

[0006] PGRs and their various uses are described, for example, in *Industrial Plasma Torch Systems,* Westinghouse Plasma Corporation, Descriptive Bulletin 27-501, published in or by 2005; a paper by Dighe in Proceedings of NAWTEC16, May 19-21, 2008, (Extended Abstract #NAWTEC16-1938) entitled "Plasma Gasification: A Proven Technology"; a paper of Willerton, Proceedings of the 27th Annual International Conference on Thermal Treatment Technologies, May 12-16, 2008, sponsored by Air & Waste Management Association entitled "Plasma Gasification—Proven and Environmentally Responsible" (2008); a U.S. patent application of Dighe et al., 2008/0299019, published Dec. 4, 2008, entitled "System and Process for Upgrading Heavy Hydrocarbons"; a U.S. patent application of Dighe et al., Ser. No. 12/157,751, filed Jun. 14, 2008, entitled "System and Process for Reduction of Greenhouse Gas and Conversion of Biomass", all of said documents being incorporated by reference herein for their descriptions of PGRs and their uses.

SUMMARY

[0007] This summary briefly characterizes some aspects of the invention. Statements made are intended to be generally informative although not as definitive as the appended claims.

[0008] The present invention is, in part, directed to a PGR particularly, but not limited to, one applied primarily as a gasifier capable of producing a synthesized gas (or "syngas") that may be useful as a fuel, that is characterized, in a vessel of a vertical configuration, by having a bottom section, a top section, and a roof over the top section with certain geometric and structural characteristics. In some disclosed embodiments the bottom section, which may be cylindrical, contains a carbonaceous bed into which one or more plasma torches inject a plasma gas to create an operating temperature of at least about 600° C. (and typically up to about 2000° C.), and the top section extends upward from the bottom section as a conical wall, substantially continuously without any large cylindrical or other configured portions, to the roof of the vessel, the conical wall being inversely oriented, i.e., its narrowest cross-section diameter being at the bottom where it is joined with the bottom section, and is sometimes referred to herein as having the form of a truncated inverse cone.

[0009] Although some previously disclosed PGR configurations have top sections that are enlarged between the lower end of the top section and the upper end of the top section, the presently disclosed embodiments of PGRs are not previously known.

[0010] Such example embodiments may further include in their overall combination innovative arrangements of one or more feed ports for introduction of feed stock into the reactor vessel that can contribute to more uniform distribution of material. Such distributive feed port configurations are also applicable to PGRs with other vessel geometries.

[0011] Also, in farther examples with the conical wall, there are one or more outlet ports each having a duct extending from the roof to the exterior of the vessel and also extending, by an intrusion, into the interior of the vessel. Such outlet ports with intrusions can also be applied in other locations and vessel geometries of PGRs.

[0012] These and other aspects of PGRs can be selectively applied, along with the referred to conical wall, for any of the general purposes of PGRs, particularly including, but not limited to, that of producing a syngas useful for fuel applications after exiting the vessel through the outlet ports. Some disclosed examples take advantage of an improved understanding of how reactor structural features can affect characteristics such as gas flow and residence time of reactants that can contribute to achieving more complete reactions of supplied materials for enhanced production of desired output products.

[0013] The following description presents more aspects and information about example embodiments of the invention.

BRIEF DESCRIPTION OF THE DRAWING

[0014] FIG. **1** is an elevation view, partly in section, of one example of a plasma gasification reactor in accordance with the invention;

[0015] FIGS. **2** and **3** are outline elevation views of other example PGRs;

[0016] FIG. **4** is a plan view of the top roof of a PGR in accordance with an example of the invention;

[0017] FIGS. **5-8** are partial and schematic views of feed port arrangements that can be applied in some examples of the invention; and

[0018] FIG. **9** is an outline schematic view of a PGR system in accordance with an example of the invention.

FURTHER DESCRIPTION OF EXAMPLES

[0019] FIG. **1** illustrates an example PGR, such as for gasification of carbonaceous and non-carbonaceous feed mate-

rial (e.g., a mixture of coal and biomass) to produce a syngas, slag and metals. "Syngas" is a term referring to "synthesis gas" generally derived from a feed material, including carbon material (e.g., coal) or hydrocarbon material (e.g., biomass or heavy oils), subjected to gasification with oxygen (e.g., from air) and water (e.g., steam). The resulting syngas typically contains hydrogen and carbon monoxide that can be useful. Additionally, depending on the solid and gaseous materials supplied, quantities of vaporized hydrocarbons may occur in the syngas. The syngas produced may be applied to use as a fuel, for example fueling a gas turbine, or further processed to form a liquid fuel, e.g., ethanol, for transportation purposes. A PGR such as that of FIG. **1** may also be applied to purposes, such as metal salvage, where gaseous products are exhausted with or without subsequent treatment.

[0020] The reactor of FIG. **1**, shown in full elevation in its left half and vertically sectioned in its right half, has a reactor vessel **10**, generally of refractory-lined steel (the lining not being specifically shown in the drawing), whose prominent parts include a top section **12**, a bottom section **14**, and a roof **16**. The top section **12** has its lower and upper ends joined, respectively, to the bottom section **14** and the roof **16** in a gas tight manner. One aspect of particular interest in the FIG. **1** embodiment is that the top section **12** has a conical wall **18** from the bottom section **14** (smaller cross-section) to the roof **16** (larger cross-section). The wall **18** has an angle (α, in FIG. **1**) relative to the vertical axis of the reactor vessel **10** (e.g., an angle in the range of about 5° to about 25°) over substantially its entire extent. This is one example of a configuration that can aid operational gas flow (discussed further below). However, useful configurations and benefit can also be obtained if there are minor variations, such as a wall like the wall **18** but having a variation in its conical slope anywhere along its extent to a larger angle relative to vertical as one proceeds up the wall **18**, or to a lesser angle, by a change of no more than about 5°, or where the wall includes, for whatever reason, a minor portion, no more than about 10% to 20% of its total length, of variant or non-conical (such as cylindrical) form (where the use of up to about 20% of the total length in cylindrical form can be particularly useful for the location of feed ports as will be explained further in reference to FIG. **6**.).

[0021] FIGS. **2** and **3** illustrate embodiments in which a lower portion of the top section **12***a* has a conical wall portion **18***a* at a slightly different angle than the conical wall portion **18***b* of an upper portion of the top section **12***b*, as examples of other suitable innovative arrangements. In FIG. **2**, the wall **18***a* of the lower portion **12***a* is angled out more then wall **18***b* of the upper portion **12**. In FIG. **3**, the variation is that wall **18***b* is angled out more than wall **18***a*. Other aspects of FIGS. **2** and **3** will be discussed below.

[0022] Returning to FIG. **1**, the bottom section **14** of the reactor vessel **10** example can be of any convenient configuration and is generally cylindrical. It fits directly with the circular bottom of the top section **12**, however with a minor conical transition **13** with a greater angle than most of the wall **18**. Thus, the top of the bottom section **14** and the bottom of the top section **12**, have like configurations or have a transition of minor extent therebetween.

[0023] It is generally convenient for the top section **12** and its substantially conical wall **18** to have a circular cross-section at horizontal levels over the vertical extent of the vessel. Another variation is where the lateral cross-section of the top section **12** is not circular; for example an oval cross-section with orthogonal lateral dimensions having a ratio in a range greater than 1 to 1, including those up to about 3 to 1, is suitable. Any example described may have a circular or non-circular cross-sectional configuration, as well as the other described aspects of PGRs.

[0024] To summarize the geometrical characteristics of a wall **18** as shown in FIG. **1** and, also, as subject to some variations in other examples of PGRs:

[0025] the wall **18**, or at least about 80% to 90% of it, has a slope relative to the vertical axis at an angle a that is between about 5° and about 25°;

[0026] the wall angle α is either the same overall or is increasingly wider as one proceeds up from the bottom section **14** to the roof **16** or, in examples in which a becomes less, i.e., there is a transition from a larger α to a smaller α as one proceeds vertically up, any such transition is no more than about 5° of angle and the upper part still has an a greater than zero;

[0027] the conical wall **18** can have either a circular cross-section (the most typical case) or some other including an oval cross-section, such as up to a ratio of about 3:1 in two orthogonal diameters; and

[0028] any parts of a side wall of a PGR top section **12**, from a bottom section **14** to a roof **16** that do not meet any of the above criteria, e.g., a cylindrical wall with zero angle to vertical, is limited to no more than about 10% of the vertical height of the top section, except where a cylindrical wall portion is provided with one or more lateral feed ports it may occupy up to about 20% of the vertical height of the top section.

[0029] Even with such possible modifications, all of which are to be considered within the scope of the invention as a "conical top section" or "conical wall", or "continuous conical wall", whether or not the term "substantially", or the like, accompanies them, the conical wall **18** contrasts with prior PGR vessel configurations, e.g., those with substantial (at least about 25%) cylindrical portions or conical portions that are wider at bottom than top.

[0030] The upper section wall geometry referred to herein is the geometry of the interior surface of a wall such as wall **18** in FIG. **1**. Typically, the outer surface of a top section wall is parallel with the inner surface but that is not essential to meet the criteria of interest.

[0031] Additional features of the bottom section **14** and their purposes are as follows for this typical example. The bottom section **14** contains a space for a carbonaceous bed **20** (sometimes referred to as the carbon bed or the coke bed) that can be of constituents such as fragmented foundry coke, petroleum coke, or mixed coal and coke. By way of further example, the bed **20** can be of particles or fragments of the mentioned constituents with average cross-sectional dimensions of about 5-10 cm., or are otherwise sized and shaped to have ample reactive surface area while allowing flow through the bed **20** of supplied materials and reaction products, all generally in accordance with past PGR practices.

[0032] The bottom section **14** has a wall **15** with one or more (typically two to four) nozzles, ports or tuyeres **22** (alternative terms) for location of a like number of plasma torches **24** (not shown in detail). The plasma ports **22** may be either at an angle to the horizontal, inclined downward, as shown, or otherwise, such as horizontal (which is also the general case for feed ports **28** and additional tuyeres **30** of the top section **12** discussed below).

[0033] The bottom section **14** is also equipped with a number (one or more; typically one or two) of molten liquid outlets **26** for removal from the reactor of metal and/or slag.

[0034] Returning now to further describe aspects of the top section **12**, the conical wall **18** is provided with a number (at least one; typically one to three) of lateral (i.e., through the wall **18**) feed ports **28**. Lateral feed ports **28** make it generally unnecessary to have any feed port through the roof **16** although that form is not excluded as either an addition or an alternative. The lateral feed ports **28** allow entry of feed material close to the primary reaction region of the reactor and can lessen the chance of unreacted feed material being blown out through outlet ports in or near the roof Subsequent description of FIGS. **5-8** below includes discussion of ways of getting substantially uniform distribution of material as well as thoroughness of reactions. In accordance with one example, described further in connection with FIG. **8**, a feed port is equipped with a distributive feed mechanism to help get more uniform distribution of feed material over the interior of the reactor's top section.

[0035] Additionally, the top section **12** of FIG. **1** has a number of tuyeres **30** (e.g., up to about a dozen in each of two rows) for use as needed or desired in any particular process that is performed to supply additional, generally gaseous, material. The tuyeres **30** are, in this example, located through the conical wall **18** below the feed ports **28** and proximate the bottom section **14**. The plasma ports **22** of the bottom section **14** are sometimes referred to as primary tuyeres while the tuyeres **30** of the top section **12** are sometimes referred to as secondary tuyeres (those in a row closest to the bottom section **14**) and tertiary tuyeres (in a row above the second tuyeres).

[0036] The roof **16** covers the upper end of the conical wall **18** of the top section **12**. The perimeter of the upper end of the wall **18** is sealed in a gas-tight relation to the roof **16**. The roof **16** has a number, one or more, typically two to six, of outlet ports **32**. The outlet ports **32** constitute ducts for exit of gaseous products (e.g., syngas) from the reactor vessel **10**. In some examples of a PGR of the invention, as in FIG. **1**, outlet ports **32** are only through the roof **16** of the reactor vessel **10** and feed ports **28** are only through the conical side wall **18**.

[0037] In the example of FIG. **1**, the outlet ports **32** extend directly vertically through the roof **16**. Among alternative arrangements, roof outlet ports, of whatever number, can be arranged with their axes at an angle to the vertical; one example being to have the axis of an outlet port at an angle substantially the same as the angle of the wall **18** and parallel with the wall **18**. More generally, the axis of outlet ports through the roof may be at any angle and in some instances be other than as shown through the roof **16**, such as laterally through the upper periphery of the wall **18** itself, such as in FIG. **3**, while the roof of the vessel has either none or also has one or more outlets. Typically, a manway with a removable cover is also provided in the roof **16**.

[0038] In some examples of interest, as in FIG. **1**, the outlet ports **32** are located in the roof **16** proximate the inner surface of the wall **18**. In whatever configuration of the outlet ports is utilized, in terms of their number, size, location and angle, they can be mere openings through the roof (or wall) of the vessel **10**, with suitable external ductwork, or, as shown in FIG. **1**, the outlet ports **32** can be arranged with ducts **34** passing to the exterior of the vessel **10** from a location inside of the vessel **10**. The inner part of the ducts **34** is referred to as an intrusion or intruding port **36**. The intrusions **36**, in some examples as shown in FIG. **1**, extend into the space proximate the inner side of the side wall **18** of the top section **12**.

[0039] FIG. **1** and the above description including various modifications provide examples of PGRs each utilizing a top section **12** with a substantially continuous conical wall **18**, as described, in contrast to prior known PGRs of comparable parts and purposes that have, in one or more sections above that which contains a carbonaceous bed, a significant part of cylindrical or other configuration.

[0040] Practitioners can utilize and take advantage of a substantially continuous conical wall **18** in PGRs of otherwise conventional configuration, for example, with normal gravity fed feed ports and outlet ports anywhere near the top of the vessel and without an intrusion. Also, a continuous conical wall **18** can be part of overall altered PGR designs including, for example, one or more feed ports having means for enhanced distribution of feed material as well as one or more outlet ports having a duct with an intrusion, as described above.

[0041] In FIG. **2**, outlet ports **32** are shown through a roof **116**. Here the roof **116** is domed shaped.

[0042] In FIG. **3**, a variation is shown with outlet ports **132** extending laterally from an extreme top portion **12***c* of the top section that also, in this example, is shown with a cylindrical configuration of a minor extent that still keeps an overall substantially conical configuration for the wall **18**. Alternatively, the conical shape of the wall **18** itself may continue up and the lateral outlet ports **132** provided through it.

[0043] FIG. **3** can be an example of outlet ports **132** without an inner intrusion, although intrusions can suitably be used there as well. FIGS. **2** and **3** for simplicity do not illustrate feed ports except the top central feature **116***a*' in the roof **116**' of FIG. **3** can represent either a central gravity fed feed port or a manway. Feed ports and tuyeres in the top section and the entire bottom section of the reactors in FIGS. **2** and **3** are omitted for simplicity. They may, for example, be configured substantially as described in connection with FIG. **1** or the other examples herein.

[0044] PGR outlet ports with intrusions, like outlet ports **32** having ducts **34** with intrusions **36** of FIG. **1**, are not limited to use in PGRs with a substantially conical wall, such as the wall **18**. Favorable use of such outlet ports can be made with other side wall geometries, as well as in other locations than the specific examples shown.

[0045] The following is presented by way of further explanation and example of factors influencing the conical top section design configurations.

[0046] The arrangements disclosed have particular relevance in their application to vertically oriented, atmospheric gasifier vessels. These are gasifier vessels for operation at or near atmospheric pressure (i.e., operable in a range from slightly negative pressure to slightly positive pressure) that are subjected to flow of gases and gas borne solid elements, with high temperatures, throughout their operation. It can be important how reactor configurations affect the movement of gases and particles in a freeboard region **38** of the reactor **10**, as in FIG. **1**.

[0047] The interior of the top section **12** can be considered to contain two principal regions. A gasification region **29** is the region at or proximate the tuyeres **30** in which supplied material is (at least partially) gasified. (A water jacket **31** can be used as desired to moderate wall temperature.) The freeboard region **38** is the space in the top section **12** above the tuyeres **30** through which gasified materials ascend. Studies

by computational fluid dynamics can model heat transfer and fluid flow for the gasifier vessel in the freeboard region **38** to help achieve improved performance. Alternative designs can be evaluated based on a number of criteria such as the velocity flow field, the gas residence time distribution and the solids carryover to an outlet. Such studies can demonstrate how a benefit can be attained by having a conical expansion, as described above, for the wall **18**. One characteristic attainable is that of minimizing the flow separation from the reactor wall and minimizing low velocity recirculation zones created as a result of the flow separation. It is of incidental benefit to be able in some cases to achieve lower cost for both the steel required for the vessel and its refractory lining by the relative simplicity of the conical wall **18**.

[0048] Regarding the velocity flow field, it is considered that the reactor cross-sectional velocity is better if it is more uniform as that leads to more efficient use of the reactor volume for the reactions performed.

[0049] The gas residence time distribution profile indicates the average gas residence time. A longer time is generally better for more consistent composition of products at the reactor outlets. Also, feed materials need a high enough temperature for a sufficiently long time for more thorough reaction, i.e., so an undesirable amount of unreacted feed material does not exit the reactor. This can be of particular importance with some heavy materials such as tar. A generally desirable characteristic is for the reactor to perform substantially like a plug flow reactor which means input solid materials descend mainly vertically and output gases ascend mainly vertically.

[0050] Consequently, the gas generated within the reactor should have at least a minimum residence time of sufficient length to achieve satisfactory performance.

[0051] Based on the above considerations, it is the case that performance of a reactor in which there is a conical top section wall, such as wall **18**, (including the described minor variations) is often better than one having a cylindrical or other configuration for any more significant portion of the top section **12**.

[0052] In addition, whether used with a top section conical wall or with a conventional top section of some significant cylindricality, the configuration of outlet ports can make a significant difference in the carry-over velocity as well as the residence time.

[0053] The solids carry over is mainly a function of the axial velocity along the main flow path apart from the solid physical properties. The average axial velocity along the main gas flow path to the outlets is termed the "carry-over velocity". It is desirable to have the carry-over velocity as low as possible to minimize the solids carryover.

[0054] Various outlet configurations have been evaluated. It is found generally that better flow and efficiency characteristics result if there are two or more individual outlets, e.g., at least four. By way of further example, six outlets, as shown in FIG. **4**, can be one effective arrangement. Here is shown a domed roof **1 16** of a reactor vessel with six outlet ports **32** uniformly arranged about, or near, the outer periphery of the roof **1 16**, without any more centrally disposed outlets. For combination with a circular top of a conical wall **18**, the roof **116** can be circular. The outlet ports **32** may be circular in cross-section, as shown, or have some other cross-section. With any number of outlet ports **32** provided through the roof **116**, it is generally suitable to have them located proximate the periphery of the roof **116**.

[0055] A PGR roof can be of various forms including, for example, substantially planar across the top of the top end of the conical wall **18** or, as shown by roof **16** in FIG. **1**, projecting upwardly from the top of the wall **18**, either with joined roof portions, such as portions **16***a* and **16***b*, that are individually planar, or a continuous bowed out curved surface as shown by roof **116** in FIGS. **2** and **4**.

[0056] The individual outlet ports **32**, of whatever number or location, can usefully include in their ductwork an intrusion, similar to the intrusions **36** of FIG. **1**. The intrusions can, for example, extend about 0.5-1.0 m. from the roof into the vessel (i.e., from the interior surface of the roof). These have been found, at least in some analyses, to contribute to stability of gas flow from the outlets.

[0057] The additional tuyeres **30** of FIG. **1** include a row of secondary tuyeres and a row of tertiary tuyeres. The secondary tuyeres typically number about twelve in a row below, nearer the coke bed **20**, than a row of a similar (or larger) number of the tertiary tuyeres. The tuyeres **30** are used to admit materials, usually gaseous materials such as air (or other oxygen containing gas) and steam (or other water). Particulate solids can also be introduced through the tuyeres **30**. Embodiments like FIGS. **2** or **3** can have similarly arranged additional tuyeres, which are emitted from those figures for simplicity.

[0058] In some process operations it can be satisfactory for feed material to be supplied merely through an opening through the roof of a reactor but it can be more generally helpful to enhance the residence time of solids by only supplying feed material through lateral feed chutes such as feed port **28** through a side wall, such as **18**. One or more of such feed chutes, with other wall arrangements, are included in prior examples of PGRs. Further innovations can include some means for more uniform distribution of feed material into the top section of the reactor as is more fully described in connection with FIGS. **5-8**. For example, and without limitation, one may get reasonably uniform feed material distribution if a feed chute (even where just one is used) is angled down from the horizontal, such as the feed port **28** shown in FIG. **1**. Also, in combination with such an angled chute or independently, it can help to have a distributive feed mechanism within a feed chute. Variations can include mechanisms that can be programmed or adjusted to vary the force applied to the feed material (to achieve variations in the distance it is injected, for example, in a radial inward direction) and/or to vary the angle or direction from the feed chute that the material is injected. FIG. **8** further illustrates this aspect.

[0059] The following supplemental information refers to some other aspects of embodiments the invention may take.

[0060] Plasma torches **24** that may be applied in the plasma torch ports **22** in FIG. **1** may be in accordance with prior practice such as that shown and described in U.S. Pat. No. 4,761,793 by Dighe et al. that is hereby incorporated by reference for its description of the nature and operation of plasma torches and how they can be applied to a PGR.

[0061] PGRs to which the inventive features are applicable can be of a wide range of sizes. Just for example, and similar to some past practices, the total vertical extent of a reactor vessel may be about 10-12 m. and the bottom section, containing the carbon bed, can have a width of about 3-4 m. and a depth of about 1-4 m. The top section can be such as to expand from a bottom diameter like that of the bottom section

(about 3-4 m.) to a top diameter, at the roof, of about 7-8 m. Other dimensional examples are given in reference to the description of FIG. **9**.

[0062] Also by way of example, it is found helpful in various applications to operate so that feed material forms a charge bed on top of the carbon bed that extends up past the height of both of the rows of tuyeres **30** (such as by about 0.5 to 1.0 m.). In regard to the reactor geometry, it may also be noted that reactor vessel **10** can, as examples, be configured to have the secondary tuyeres located about 5-15% of the distance up from the top of the bottom section to the roof, the tertiary tuyeres about 10-30% of that distance up from the top of the bottom section, and the one or more lateral feed chutes at least about 40-60% of the distance up.

[0063] FIGS. **5-8** generally illustrate some means for distributive introduction of feed material through ports into the top section **12** of a reactor vessel, such as one having a conical wall **18** although applicable to other configurations as well. It is recognized that having feed material relatively uniformly distributed within the reactor vessel is favorable to uniformity of performance and completion of reaction processes. These are some of the means that can be employed that can result in a better distribution than a single gravity feed port through a lateral wall, such as, but not limited to, the conical wall **18**. These are means that also have an advantage over merely dropping material through an opening in the roof, which is a generally workable practice but risks considerable blowing out of unreacted material through nearby outlet ports.

[0064] FIG. **5** is an example with multiple (here two, typically two to four could be used) feed ports **128** through a wall **18** (just part of which is shown). The feed ports **128** can be merely gravity fed without other distribution enhancements (which could be additionally provided if desired) and the different points of material introduction help to distribute the feed material. It is acknowledged that multiple lateral feed ports have been previously disclosed in plasma rectors, such as in Dighe et al. U.S. Pat. No. 5,728,193 and Do et al. U.S. Pat. No. 5,987,792. Here it is a combination of multiple lateral feed ports **128** and a substantially continuous conical wall **18** of the top section **12** of the reactor that is being disclosed. However, such multiple side entry points for feed material, although generally effective as well as simple to construct, are not the only means for advantageous feed distribution.

[0065] FIGS. **6**, **7**, and **8** illustrate other means for feed distribution. These are means for feed distribution applicable to use with even only one feed port, although not limited thereto.

[0066] In FIG. **6**, feed material is supplied through a lateral feed port **228** that has a protrusion **229** (e.g., of refractory lined steel, which additionally may be water cooled) that extends into the vessel toward the vessel's center axis. The protrusion **229** can also be, for example, angled down, such as at angle of about 60°, below horizontal and have an end from which feed material falls nearer to the center axis of the vessel **10** than to the side wall which in this example is a substantially conical wall **218** which includes a cylindrical section **218***a* (of no more than about 20% of the top section's height). Feed material will descend by gravity to the central region of the lower part of the reactor roughly along the dashed line trajectory shown. Such a feed port **228** and protrusion **229** through a side wall can be applied to other wall configurations as well.

[0067] Among the notable points about the particular example of FIG. **6**, and referring back to FIG. **1**, are that a protrusion **229** can be chosen to extend any desired distance into the reactor vessel's top section **12** from the conical wall **18**. It can extend further toward the center of the vessel where it is intended to form a more uniform charge bed or where it is intended to further minimize the impact of feed material on the inner surface of the wall **18**, that typically has a layer of refractory material.

[0068] Furthermore, even with a very limited protrusion **229**, or even no protrusion of the feed port beyond the wall **18** into the vessel, FIG. **6** shows an example of a configuration of the wall **218** that can help minimize wear on the inner wall surface below the feed chute **228**. In this embodiment, the wall **218** has outwardly extending, conical portions **218***b* and **218***c* with the feed port **228** located on the cylindrical wall portion **218***a* between portions **218***b* and **217***c*. The cylindrical wall portion **218***a* extends below the feed port **228** before it meets the conical wall portion **218***b*. That means, in contrast to FIG. **1**, material entering the vessel from the feed port **228** does not immediately descend onto the inner surface of a conical wall. Here, in FIG. **6**, the material from the feed port **228** generally takes an arcurate path and scatters to some extent so the impact on an inner wall surface **218***b* is minimized and its wear is lessened.

[0069] FIG. **7** shows an alternative in which a feed port **328** is at least proximate the center of the roof **316** and has a protrusion **329**, similar in form to protrusion **229** of FIG. **6** but here extending vertically down well into the top section **12**, i.e., so material enters well below the outlet ports **332**, which is also the case in FIG. **6**. Thus, the protrusion **329** can, although it need not, extend at least a third of the way down through the top section **12** at or near the center axis. Naturally a feed port protrusion, such as **229** or **329**, requires structural strength and/or cooling adequate for its exposure to high temperature.

[0070] FIG. **7** shows an outline **360** of the approximate maximum extent of any build up of feed material on a charge bed in the reactor. Lines **322** and **330** in FIG. **7** are shown as representative indications of the location of primary and additional tuyeres of the example reactors. The FIG. **7** embodiment can place feed material centrally on the charge bed. Outlet ports **332** with intrusions **336** are also shown in the example of FIG. **7**.

[0071] FIG. **8** shows another means for feed distribution. A feed port **428** in a lateral wall **18** is arranged with a distributive feed mechanism **450** that has feedstock supplied to it from a supply **452** and by mechanical force injects or throws the material into the interior of the vessel.

[0072] The distributive feed mechanism **450** arranged in the combination can be like or similar to mechanisms heretofore applied for forced distribution of materials in apparatus applied in fields such as agriculture and mining. One such mechanism is that commonly referred to as a slinger conveyor. Other mechanisms can be used; for present purposes a distributive feed mechanism can be any that applies mechanical force to the feed material. An air blower is one other such apparatus but is best used where the feed stock has a substantial amount of matter that is roughly consistent in size and weight.

[0073] FIG. **8** additionally shows, as an option in combination with the distributive feed mechanism **450**, a force and direction controller **454**, that can do either or both of two things: the controller **454** can be arranged so the feed mecha-

nism **450** applies varying magnitudes of force to feed material to provide, over time, even better distribution than with constant force. Also, the controller **454** can be arranged so the feed mechanism **450** applies force at varying angles (e.g., by a range of movement of the mechanism **450**), either, or both, in a horizontal plane or vertically, for better distribution than if material continuously enters at the same angle. The particular mechanism **450** and controller **454** can be adapted from material handling equipment technology used in other contexts.

[0074] The means disclosed in FIGS. **6-8** are each shown applied to only a single feed port of the reactor vessel. That is generally satisfactory but other numbers of such means, or combinations of such means, could be employed. It should also be understood that the arrangements for feed ports with enhanced distribution of feed material as shown in FIGS. **6**, **7**, and **8** are not necessarily limited to use with a reactor having a top section with a substantially conical wall, although such a wall may be often preferred.

[0075] In the case of any of the feed ports described herein, they can either be open to admission of air along with feedstock, such as under normal atmospheric conditions, or the feed supply and feed ports can be restricted to limit air admission, which can sometimes be favorable for some reactions.

[0076] FIG. **9** shows an example of a system in accordance with the invention, in outline and schematic form, that includes a plasma gasification reactor vessel **510** in a form as previously described, and subject to variations such as those previously described.

[0077] Merely by way of further example, some examples of suitable, approximate, dimensions for some elements of the vessel **510** are given. Unless otherwise made clear, the dimensions given refer to internal dimensions only. The vessel **510** is not shown with a wall thickness but the wall could typically be in a range of about 0.3-0.6 m., including steel and refractory material. A top section **512** of the vessel **510**, within a conical wall **518**, can have a cross-sectional diameter at a bottom level **512***a* (above a transition **513** between the bottom section **514** and this top section **512**) of about 3.5 to 4.5 m. and a cross-sectional diameter at a top level **512***b* of about 7 to 8 m., resulting in an angle a of about 12°. At a level **512***c*, proximate and slightly above some auxiliary tuyeres **530** (which may be in two levels of secondary and tertiary tuyeres as previously disclosed), the cross-sectional diameter of the vessel can be about 4 to 5 m. and this would be the approximate diameter of the top surface of a charge bed **529** of feed stock fed into the vessel from a feed port **528**, subject to all the prior descriptions of examples of feed ports, which can be one or more in number.

[0078] FIG. **9** does not intend to show a particular configuration for the top surface of the charge bed **529**; it need not be level, although approximate levelness is favorable, and it typically is somewhat higher in one or more locations that are closer to (e.g., directly under) any gravity fed feed ports that the reactor has which do not have a distributive feed mechanism.

[0079] The overall height of the top section **512**, from level **512***a* to level **512***b* can be about 11 to 13 m.; the charge bed **529** can have a height between the levels **512***a* and **512***c* of about 2 to 3 m.

[0080] The vessel **510** also has a bottom section **514**. It can have a cylindrical diameter of about 1 to 2 m. and a height of about 3 to 4 m. The bottom section **514** contains a bed **520** (labeled C bed) of carbonaceous material as described in connection with FIG. **1**.

[0081] The bottom section **520** is here shown with a plasma torch nozzle or primary tuyere **522** for a plasma torch **524** injecting a plasma gas into the bed **520** that creates a suitably high temperature in the bed **520**. As shown, the torch **524** is supplied with a torch gas, conveniently air but other gases and gas mixtures are suitable as well. The plasma torch in any of the embodiments may have an additional supply (not shown) of material such as steam, oil, or another material reactive in the bed **520** with the torch gas. The additional material can be supplied to the nozzle **522** in front of the plasma generating torch **524** or a region of the C bed **520** proximate the location of the nozzle **522**. Reference is made to the above-mentioned U.S. Pat. No. 4,761,793 for further understanding of examples of plasma torch nozzles that may be applied in systems such as that of FIG. **9** and which have a shroud gas applied around the plasma plume of a torch.

[0082] The C bed **520** need not fill the bottom section **514** of the reactor **510** to the top of section **514**; the charge bed **524** can extend part way within the top of section **514**.

[0083] FIG. **9** also shows an outlet **526** for molten metals and slag from the bottom of the C bed **520**.

[0084] The secondary and tertiary tuyeres **530** that supply the charge bed **529** in the gasification region of the reactor are shown connected with a supply **531** (which is representative of one or more supplies of the same or different materials) that is shown, for example, as introducing one or more fluids such as air or steam into the charge bed **529**.

[0085] The charge bed **524** is formed of material fed into the vessel **510** from a feed port **528** that is shown in conical wall **518** and is merely representative of feed ports as previously described. The feed port **528** is supplied from a feedstock supply **529** supplying, for example, coal or other carbonaceous material, waste which could be municipal solid waste or industrial waste, biomass, which could be any wood or plant material harvested for the purposes of the system or a byproduct of other agricultural activity, or some combination of such materials.

[0086] Most of the feedstock descends to the charge bed **524** but some may react with rising hot gases in the freeboard region **538** above the charge bed **529**. Also, the rising gases from the charge bed **524** can react further in the freeboard region **538**.

[0087] Reactions performed in a system like that of FIG. **9** typically include fuel particle surface reactions and gas phase reactions. The fuel particle surface reactions can include a gasification reaction of

$$C+\tfrac{1}{2}O_2 \rightarrow CO,$$

a Boudouard reaction of

$$C+CO_2 \rightarrow 2CO,$$

and a water gas reaction of

$$C+H_2O \rightarrow CO+H_2.$$

The gas phase reactions can include a combustion reaction of

$$CO+\tfrac{1}{2}O_2 \rightarrow CO_2,$$

a CO shift reaction of

$$CO+H_2O \rightarrow CO_2+H_2,$$

and a steam reforming reaction of

$$CH_4+H_2O \rightarrow CO+3H_2.$$

[0088] The total reactions result in a syngas formed in the freeboard region **538**, particularly in the region above the entry point for material from the feed port **528**. The syngas can have significant amounts of carbon monoxide and hydrogen, along with nitrogen from air supplied to the reactor. Lesser amounts of carbon dioxide and other compounds can occur in the syngas.

[0089] At the top of the top section **512** of vessel **510** is the roof **516** that has some number of outlet ports **532** from which the syngas exits for subsequent use as fuel or other disposition.

[0090] Along with the other dimensional examples given above, the roof **516** covers the maximum width of the top section **512** and also has a raised center about 1 to 2 m. above the top level **512***b* of the top section **512** with sloping surfaces (at, for example, about a 30° angle) therebetween in which the outlet ports **532** occur, near to the conical wall **518**. The outlet ports **532** can, for example, have a diameter of about 1 to 1.5 m. with each having an intrusion **536** of about 0.5 to 1 m.

[0091] By way of more particular example, a reactor vessel **510** can have four plasma torch ports **522** with plasma torches **524**, twelve each of the secondary and tertiary tuyeres **530** and six of the outlet ports **532**, with the several elements each being spaced around the circular periphery of the reactor structure, along with one or more feed ports **528**.

[0092] Accordingly, it can be seen how PGRs can be configured with one or more innovative features. Without limitation as to particular levels of performance, it is believed that among the ways the innovations can be used are ways in which they contribute to overall efficiency in terms of thoroughness of reactions and yields of desirable reaction products.

[0093] In some described examples, it is indicated the innovations presented are combined with some aspects of prior PGR practices. Any public knowledge of prior apparatus and practices can be drawn upon as needed to facilitate practice of the innovations presented.

[0094] The present application incorporates by reference any content of the copending companion applications identified above for any description of PGRs not contained herein.

[0095] In the course of the description various embodiments are presented, along with some variations and modifications, all of which are to be taken as examples of arrangements, but not the sole or exclusive arrangements, practitioners may employ that are within the scope of the claims.

What is claimed is:

1. A plasma gasification reactor comprising:

a vertically oriented reactor vessel including a bottom section and a top section;

the bottom section containing a carbonaceous bed and arranged with one or more plasma torch ports containing, in each port, a plasma torch with a capability of the one or more plasma torches of establishing an elevated temperature within the bed of at least about 600° C.;

the top section extending from the bottom section to a roof over and joined with the top section;

the vessel also including one or more feed ports for supply of feed material into the top section; and

the roof over the top section having one or more outlet ports for exiting gases from the reactor, at least one of the outlet ports comprising a duct that extends through the roof to the exterior of the vessel and, also, having an intrusion that extends vertically within the vessel a distance below the roof.

2. The reactor of claim **1** wherein:

the bottom section has one or more outlet ports for molten slag and metals.

3. The reactor of claim **1** wherein:

the outlet ports number at least two ports each having an intrusion that extends within the vessel a distance below the roof of at least about 0.5 meter.

4. The reactor of claim **1** wherein:

the one or more feed ports are arranged to deposit feed material on top of the carbonaceous bed of the bottom section, which feed material is, at least in part, gasified within the vessel to produce a syngas that exits through the one or more outlet ports.

5. The reactor of claim **4** wherein:

the reactor vessel has one or more tuyeres extending into a lower part of the top section, below the one or more feed ports, for supply of gas or liquid constituents including at least one or more of air, oxygen, steam, and water.

6. The reactor of claim **5** wherein:

the conditions within the vessel are such that the feed material and the gas and liquid constituents are reacted in one or more stages to produce gaseous products rising and expanding within the top section with sufficient residence time to form the syngas which comprises, at least in part, hydrogen and carbon monoxide that exit through the one or more outlet ports; and

the one or more outlet ports with intrusions are the only gas outlet ports from the top section.

7. A plasma gasification reactor vessel comprising:

a bottom section that includes a space for a carbonaceous bed and has an exterior wall with one or more plasma torch ports;

a top section extending vertically up from the bottom section; and,

a roof atop the top section with one or more outlet ports, to the exterior of the vessel, which extend through the roof and include a duct intrusion extending within the top section below the roof.

8. The reactor vessel of claim **7** wherein:

the intrusion of each of the outlet ports extends below the roof into the interior of the vessel a distance within a range of from about 0.5 m. to about 1.0 m.

9. The reactor vessel of claim **7** further comprising:

one or more feed ports for supply of feed material including solids into the top section; and,

the top section has a side wall having one or more tuyeres extending therethrough for process material including gases and vapors, the tuyeres being located closer to the bottom section of the vessel than the feed ports are.

10. The reactor vessel of claim **9** wherein:

the outlet ports that extend through the roof with an intrusion are the sole outlet ports of the vessel.

11. The reactor vessel of claim **9** wherein:

the feed ports all extend through a side wall of the top section.

12. A syngas production system including a plasma gasification reactor vessel in accordance with claim **9** wherein:

the bottom section contains a carbonaceous bed and one or more plasma torches are located in respective plasma torch ports supplying plasma into the bed to heat the bed to a temperature of at least about 600° C.;

the one or more feed ports into the top section are related to one or more supplies of feed material including one or more of coal, solid waste, and biomass;

the tuyeres extending through the side wall of the top section are related to one or more supplies of process material including one or more of air, oxygen, steam, and water; and,

the feed ports supply process material deposited on the carbonaceous bed of the bottom section, to a depth that extends above the tuyeres of the top section, and gaseous reaction products, from reactions of the feed material, process material, and plasma fired carbonaceous bed, include carbon monoxide and hydrogen in a syngas exiting through the roof outlet ports.

13. The system of claim **12** wherein:

the outlet ports from the vessel are each located proximate to the top section side wall.

14. The system of claim **13** wherein:

the outlet ports member at least two.

15. The system of claim **14** wherein:

the outlet ports number from two to six.

16. The system of claim **15** wherein:

the roof outlet ports are the sole gas outlet ports from the vessel.

17. The system of claim **15** wherein:

the intrusions of the roof outlet ports extend vertically within the vessel below the roof or at an angle to the vertical.

18. The system of claim **17** wherein:

the intrusions of the roof outlet ports are parallel to the side wall of the top section.

* * * * *