Aug. 28, 1962 N. J. LA COSTA ET AL 3,051,086

ENVIRONMENTAL SEAL FOR CARTRIDGE

Filed Sept. 8, 1958

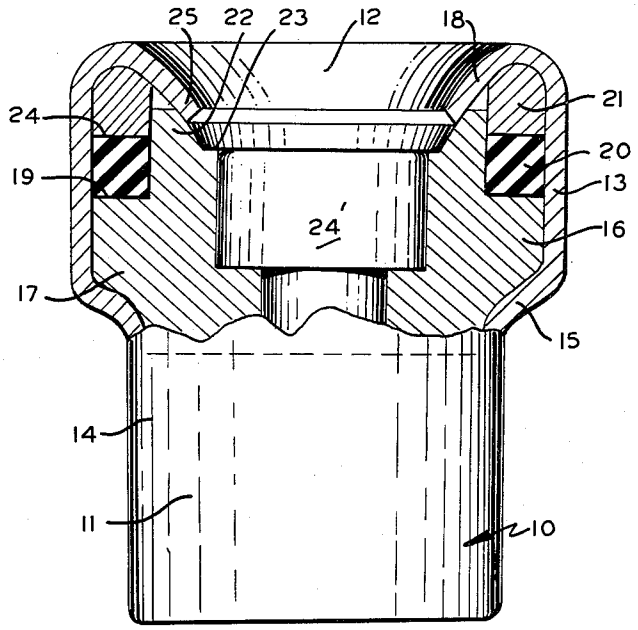

INVENTORS
NICHOLAS J. LA COSTA
PAUL L. BROWN

BY Donald M. Sandler
ATTORNEY

United States Patent Office 3,051,086
Patented Aug. 28, 1962

3,051,086

ENVIRONMENTAL SEAL FOR CARTRIDGE

Nicholas J. La Costa and Paul L. Brown, Baltimore County, Md., assignors to Aircraft Armaments, Inc., Cockeysville, Md., a corporation of Maryland

Filed Sept. 8, 1958, Ser. No. 759,698
7 Claims. (Cl. 102—39)

This invention relates to an explosive cartridge, and more particularly to a seal for a device of a class especially adapted for use in a cartridge-actuated device where it is necessary to provide on the cartridge an effective seal against humidity and pressure.

A cartridge-actuated device is a packaged unit for operating valves, cutting or splicing cables, actuating linkages, propelling masses, disconnecting components, initiating sequential operations, etc. These mechanical functions are performed by properly utilizing the gas pressure produced by an explosive cartridge.

Cartridges of the class described have a generally cylindrical can-like casing containing an explosive charge. The open end of the casing is deformed to enlarge the same to receive a closure head containing a primer assembly. To retain the head in place, the open end of the casing is crimped thereover. In order to seal the contents of the casing from deleterious effects of the environment in which the cartridge-actuated device may be used, a rubber-like gasket is interposed between the crimp and the head. Such a cartridge is shown in Patent No. 2,667,837 to Musser et al., issued February 2, 1954.

In such a construction, it has been found that there is a tendency for this type of seal to be extruded from beneath the crimp when the charge in the casing is detonated. This tendency arises when the gas pressure produced by actuation of the primer assembly reacts against the closure head in a direction toward the open end of the casing against the yielding resistance of the gasket. Such reaction is in the form of a sudden and powerful thrust which squeezes the resilient material of the gasket between the fixed crimp and the moving head. Particularly when the gasket has aged, it is likely to be squeezed or extruded from beneath the crimp. In such case, the gasket is rendered ineffective in retaining internal pressure in the casing. Considerable leakage would then occur around the head past the seat on the head at a point where the seal has been extruded. The leaking gases locally heat the metal of the head at such point causing the same to readily combine with the oxygen in the atmosphere outside the cartridge. As a result, the opening through which leakage occurs is enlarged allowing even more gases to be lost, thereby further reducing the efficiency of the cartridge and the ability of the cartridge-actuated device to perform its function. As a result, there is no assurance that cartridges with a gasket beneath the crimp provided to protect the contents of the casing from the effects of humidity and the like can be used under circumstances in which there cannot be tolerated fouling of the atmosphere by gases generated upon actuation of the primer. By containing the gases, more energy is made available for doing useful work.

Many efforts have been made to contribute a cartridge of the class described in which the gasket that seals the interior of the casing from environmental elements does not hinder preventing escape from beneath the crimp, of gases generated upon actuation of the primer, but so far as is known, no successful cartridge of the class described has yet been contributed to the art, and the problems here outlined remain unsolved. It is the object of this invention, therefore, to contribute a cartridge of the class described, and using a single sealing gasket, in which the same gasket that forms the environmental seal is effective

in containing entirely within the casing, the gases produced therein.

As a feature of this invention whereby the objects thereof are attained, a rigid ring is inserted between the gasket and the crimp and an annular flange on the head is provided which slideably engages said ring throughout the entire range of movement of the head such that the gasket is at all times contained within an enclosed space defined by the head, ring, and casing walls. With this arrangement, outward movement of the head in reaction to the gas pressure compresses the gasket in an enclosed space. There is, consequently, no possibility that the gasket will be extruded and that gases will escape past the crimp and into the environment outside the cartridge.

The more important features of this invention have thus been outlined rather broadly in order that the detailed description thereof that follows may be better understood, and in order that the contribution to the art may be better appreciated. There are, of course, additional features of the invention that will be described hereinafter and which will also form the subject of the claims appended hereto. Those skilled in the art will appreciate that the conception upon which this disclosure is based may readily be utilized as a basis for designing other structures for carrying out the several purposes of this invention. It is important, therefore, that the claims to be granted herein shall be of sufficient breadth to prevent the appropriation of this invention by those skilled in the art.

The single FIGURE of the drawing illustrates a cartridge of the class described in which the invention has been embodied.

Referring now more particularly to the drawing, there is shown a cartridge **10** which has a generally cylindrical casing **11** and an open end **12**. The open end is enlarged at **13** to form a breech portion, and the connection between enlarged end **13** and case **14** of casing **11** forms a shoulder **15**. Casing **11** is preferably made of aluminum, but other materials adaptable for this purpose and well known to those skilled in the art can be used.

Fitted into breech portion **13** is cartridge head **16** which may also be aluminum, and which has shoulder **17** at one end abutting shoulder **15** on casing **11**. The free end **18** of casing **11** is crimped over head **16** to retain the same within breech portion **13**. Crimp **18** thus overlies recess **19** in head **16**. Within this recess is a resilient rubber ring **20** forming a gasket. Between gasket **20** and crimp **18**, a metal ring **21** is interposed. Annular flange **22** on the exposed face **23** of head **16** extends in a direction toward open end **12** beyond the mating face **24** between gasket **20** and ring **21**. In the drawing, the extent to which this is one is purposely exaggerated. Actually, it has been found that in some cases, flange **22** need extend only about 0.030 to 0.040 of an inch above face **24** when the head is in assembled position.

In assembling head **16** in casing **11**, shoulder **17** abuts shoulder **15** with the free end of casing **11** extending beyond the exposed face **23** of head **16**. After gasket **20** is inserted in recess **19**, ring **21** is placed thereon, and the free end of casing **11** is crimped as at **18**, thereby placing gasket **20** under an initial compression load and providing a seal which will effectively prevent atmospheric elements entering beneath crimp **18** from reaching the interior of casing **11**. When primer assembly **24'** is actuated, the gas pressure generated causes head **16** to be thrust in a direction toward open end **12**. If the pressure is sufficient, head **16** will compress gasket **20** between the bottom of recess **19** and the bottom of ring **20**. Normally, such compression would cause gasket **20** to be extruded but annular flange **22** extending initially beyond mating surface **24** and at all times engaged with ring **21**, entirely encloses gasket **20**

between the walls of recess 19, flange 22, ring 21 and breech portion 13. As a result, the greater the gas pressure required to be sealed and the consequent reaction of the head, the greater is the seal obtained by gasket 20. In actual practice, it has been found to be desirable in some cases to provide on the cartridge-actuated device which uses a cartridge made in accordance with this invention, some means to back up or limit the uncurling of flange 18, particularly when crimp 18 engages head 16 at extremity 25. This may be necessary in order to insure that compression of ring 20 does not cause surface 24 to be moved above the extremity 25 of flange 22 and thus free ring 20 from its entrapment.

Those skilled in the art will now appreciate that there is contributed by this invention, an explosive cartridge with an effective seal against external humidity and internal pressure. This is accomplished by trapping a resilient gasket between metal pieces that provide an initial squeeze. Entrapment of the seal during reaction of the gases from the burning propellant against the head precludes extrusion of the gasket while maintaining within the casing at all times, the gases generated therein. As a result, cartridges made in accordance with this invention can safely be used in environments where fouling with gases cannot be tolerated.

We claim:

1. A device for holding high pressure fluids comprising: a casing having a cylindrical bore; said casing being open at one end; a ring on the open end of the casing; means to prevent the ring from being axially moved on the casing in a direction away from the other end of the casing, said ring having a cylindrical sealing surface concentric with but spaced from the bore, said ring having an annular gasket supporting surface facing toward the other end of the casing; a resilient gasket engaged with said gasket supporting surface; said gasket being radially expandable against the casing when the gasket is axially compressed; and a circular-sectioned closure mounted in the bore for closing the open end of the casing, said closure having a cylindrical sealing surface engaged with the cylindrical sealing surface on said ring and an annular gasket supporting surface engaged with said gasket, said closure adapted to move axially in the bore in a direction away from the other end of the casing in response to the action of the pressure of the fluids on the closure, the last mentioned axial movement of the closure causing compression of the gasket between the gasket supporting surfaces, the engagement of the cylindrical sealing surfaces preventing radial expansion of the gasket when the latter is axially compressed between said gasket supporting surfaces for causing said gasket to exert a radial force on said casing that is proportional to the axial compression of the gasket, such radial force preventing fluid from leaking between the gasket and the casing.

2. A device for holding high pressure fluids comprising: a casing having a cylindrical bore; said casing having an open end; a ring in the bore at the open end of the casing; means to prevent the ring from being axially moved in the bore in a direction away from the other end of the casing, said ring having a cylindrical sealing surface concentric with but spaced from the bore, said ring having an annular gasket supporting surface between the cylindrical sealing surface and the bore, said gasket supporting surface facing toward the other end of the casing; and a closure having a first portion of diameter substantially the same as that of the bore and a second portion of substantially the same diameter as that of said cylindrical sealing surface on said ring, said closure having an annular gasket supporting surface connecting the first and second portions of said closure; a resilient toroidal gasket in said bore engaged with the gasket supporting surfaces, the casing and the closure, said gasket being radially expandable against the casing and the closure when the gasket is axially compressed; the second portion of said closure being slideably engaged with the cylindrical sealing surface on said ring and the annular gasket supporting surface of said closure being engaged with said gasket when said first portion of said closure is slideably engaged in the bore, said closure adapted to slide axially in the bore in a direction away from the other end of the casing in response to the action of the fluid pressure on the closure to compress the gasket between the closure and the ring, the sliding engagement of said first portion of the closure with the bore and said second portion of the closure with the cylindrical sealing surface preventing radial expansion of the gasket when the latter is axially compressed between the annular gasket supporting surfaces for causing said gasket to exert radial forces on said casing and said closure that are proportional to the axial compression of the gasket, such radial forces preventing fluid from leaking past the gasket.

3. The device of claim 2 wherein said ring is separate from the casing, and the means to prevent the ring from being axially moved in the bore in a direction away from the other end of the casing is an inturned flange on the open end of the casing.

4. The device of claim 2 wherein the annular gasket supporting surface on the ring and the closure is substantially normal to the cylindrical bore.

5. An explosive cartridge comprising a casing having a cylindrical bore, said casing having opposite ends, said casing being open at one end, an inturned peripheral flange on the open end of said casing, a ring in said bore engaged with said flange, said flange preventing axial movement of the ring in the bore in a direction away from the other end of the casing, a toroidal gasket of resilient material in said bore engaged with said ring, said gasket being radially expandable in the bore when the gasket is axially compressed, a circular-sectioned cartridge head in said bore engaged with said gasket for closing the open end of the casing, primer means in said cartridge head, actuation of said primer means causing high pressure propellent gases to move said head axially in the bore toward the ring for axially compressing said gasket between the head and the ring, and means on said head and said ring cooperable throughout axial movement of the head toward the ring to limit radial expansion of the gasket in the bore for causing said gasket to exert a radial force on said bore that is directly proportional to the axial compression of the gasket when the primer means is actuated, such radial force preventing the propellent gases from leaking between the gasket and the bore.

6. An explosive cartridge comprising a casing having a cylindrical bore, said casing having opposite axial ends, said casing being open at one end, a ring on the open end of the casing, means to prevent axial movement of the ring relative to the casing in a direction away from the other end of the casing, a toroidal gasket of resilient material engaged with the casing and the ring, said gasket being radially expandable against the casing when the gasket is axially compressed, a circular-sectioned cartridge head in said bore having a portion engaged with the gasket, said head closing the open end of the casing, primer means in said cartridge head, actuation of said primer means causing the production of high pressure propellent gases, such gases acting on said head to axially move the same relative to the casing toward the ring for causing said gasket to be axially compressed between said portion and said ring, and means on said head and said ring cooperable throughout axial movement of the head toward the ring to limit radial expansion of the gasket when the latter is axially compressed for causing said gasket to exert a radial force on said casing that is directly proportional to the axial compression of the gasket, such radial force preventing propellent gases from leaking between the gasket and the casing.

7. An explosive cartridge comprising a casing having a cylindrical bore, said casing having front and rear ends, said casing being open at the rear end, a ring on the rear end of the casing, means to prevent axial movement of

the ring relative to the casing in a direction away from the front end of the casing, said ring having an annular gasket engaging surface and a cylindrical sealing surface, the sealing surface on the ring being concentric with the bore, a cartridge head for closing the open end of the casing, said cartridge head having an annular gasket engaging surface and a cylindrical sealing surface, a toroidal gasket of resilient material, said gasket having front and rear axial faces and inner and outer radial faces, the front axial face of said gasket being engaged with the annular gasket engaging surface on said head, the rear axial face of the gasket being engaged with the annular gasket engaging surface on the ring, one radial face of the gasket being engaged with the casing and the other radial face being engaged with one of said cylindrical sealing surfaces, the cylindrical sealing surfaces being engaged, said gasket being radially expandable against the casing when the gasket is axially compressed, primer means in said cartridge head, actuation of said primer means causing production of high pressure propellent gases which act on the head to axially move the same relative to the casing in a direction away from said front end of the casing for causing said gasket to be axially compressed between the gasket engaging surfaces on the head and ring, the sealing

surface of said head remaining engaged with the sealing surface of said ring throughout axial movement of the head relative to the casing, said casing and said one of said cylindrical sealing surfaces limiting radial expansion of the gasket when the latter is compressed for causing the gasket to exert a radial force on said casing and said one of said cylindrical sealing surfaces that is directly proportional to the axial compression of the gasket, such radial force preventing propellent gases from leaking between the gasket and the casing and the gasket and said one of said cylindrical sealing surfaces.

References Cited in the file of this patent

UNITED STATES PATENTS

1,515,248	Furber	Nov. 11, 1924
1,817,505	Berthold	Aug. 5, 1931
2,636,437	Loving	Apr. 28, 1953
2,667,837	Musser et al.	Feb. 2, 1954
2,724,412	Gratzmuller	Nov. 22, 1955
2,840,262	Learmonth et al.	June 24, 1958

FOREIGN PATENTS

731,749	Germany	June 3, 1943