US 20110313503A1

(19) **United States**

(12) **Patent Application Publication**

(10) **Pub. No.: US 2011/0313503 A1**

(43) **Pub. Date: Dec. 22, 2011**

Berra et al.

(54) **DELIVERY SYSTEM AND METHOD FOR SELF-CENTERING A PROXIMAL END OF A STENT GRAFT**

(75) Inventors: **Humberto Berra**, Cooper City, FL (US); **Samuel Arbefeuille**, Hollywood, FL (US); **Fletcher Christian**, Miami, FL (US); **Timothy Lostetter**, Davie, FL (US); **Frank Borrego**, Hialeah, FL (US); **Gerry Ouellette**, Coral Springs, FL (US); **Michael Moore**, Fort Lauderdale, FL (US)

(73) Assignee: **Bolton Medical, Inc.**

(21) Appl. No.: **13/024,882**

(22) Filed: **Feb. 10, 2011**

Related U.S. Application Data

(63) Continuation of application No. 11/701,876, filed on Feb. 1, 2007, now abandoned, which is a continuation-in-part of application No. 10/884,136, filed on Jul. 2, 2004, now Pat. No. 7,763,063, said application No. 11/701,876 is a continuation-in-part of application No. 10/784,462, filed on Feb. 23, 2004.

(60) Provisional application No. 60/851,282, filed on Oct. 12, 2006, provisional application No. 60/833,533, filed on Jul. 26, 2006, provisional application No. 60/765,449, filed on Feb. 3, 2006, provisional application No. 60/500,155, filed on Sep. 4, 2003, provisional application No. 60/499,652, filed on Sep. 3, 2003, provisional application No. 60/499,652, filed on Sep. 3, 2003, provisional application No. 60/500,155, filed on Sep. 4, 2003.

Publication Classification

(51) **Int. Cl.**
A61F 2/84 (2006.01)

(52) **U.S. Cl.** **623/1.11**

(57) **ABSTRACT**

A method for implanting a prosthesis centrally within a curved lumen includes loading a prosthesis into a delivery sheath, advancing the sheath in a patient towards the curved lumen to place at least the proximal end of the prosthesis within the curved lumen, and centering the proximal end of the prosthesis and/or the distal end of the sheath within the curved lumen. In a first advancing step, the outer catheter containing the inner sheath is advanced together towards the curved lumen to a location proximal of the curved lumen and, in a second advancing step, the inner sheath containing the prosthesis is advanced into the curved lumen to place at least the proximal end within the curved lumen while the outer catheter substantially remains at the location. After centering, the proximal end of the prosthesis is deployed centered within the curved lumen.

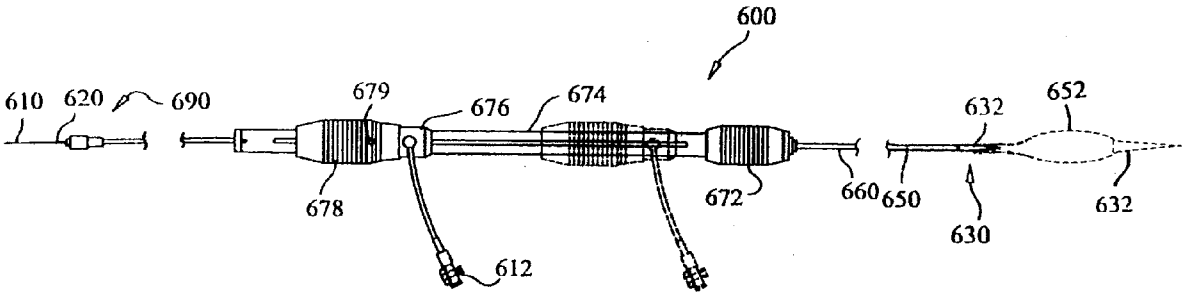

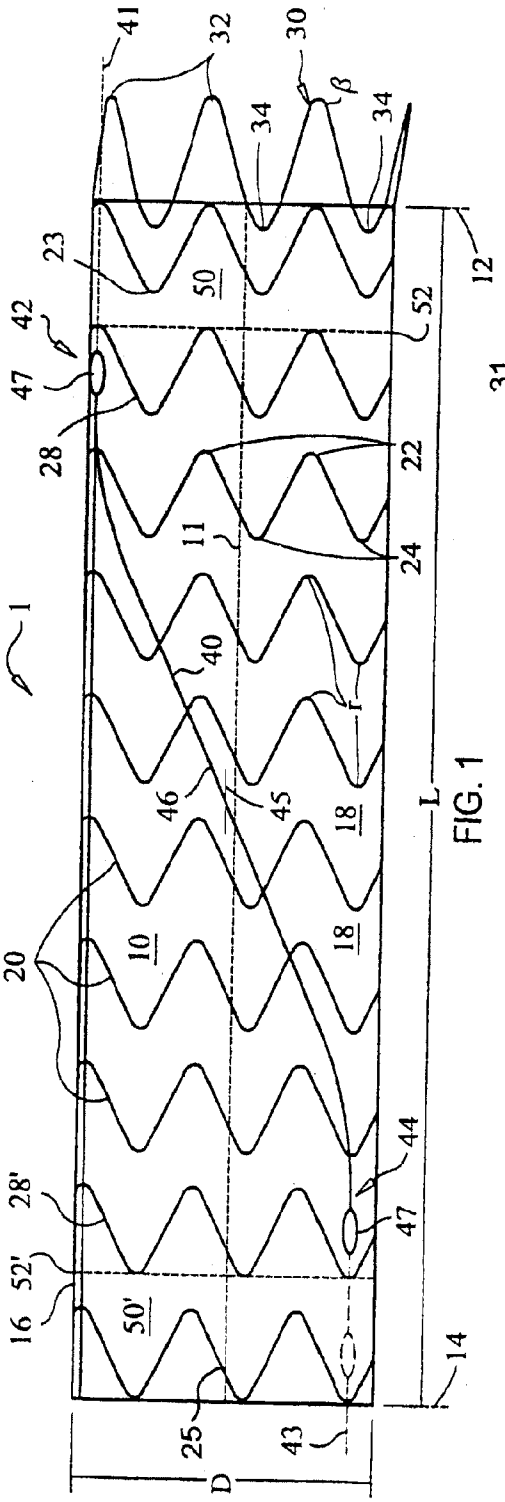

FIG. 1

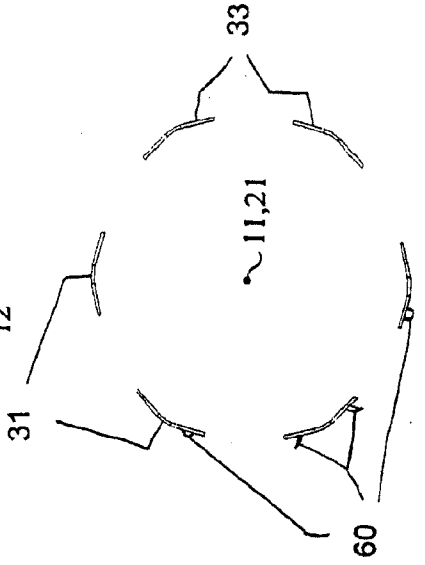

FIG. 3

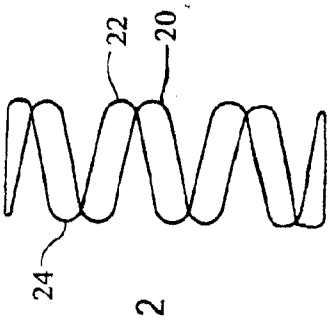

FIG. 2

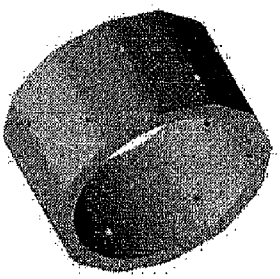

FIG. 6

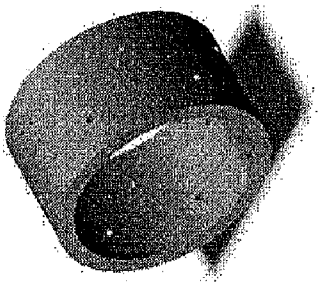

FIG. 4

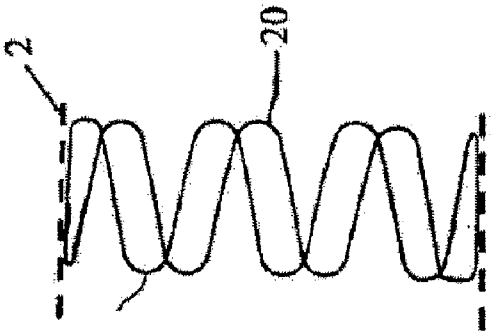

FIG. 7

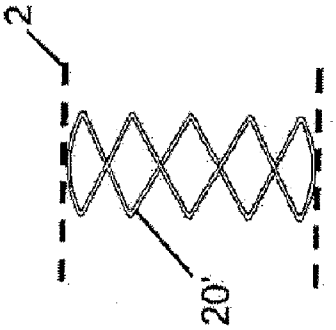

FIG. 5

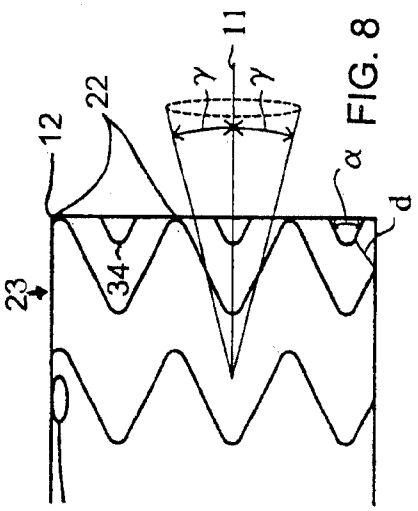

FIG. 8

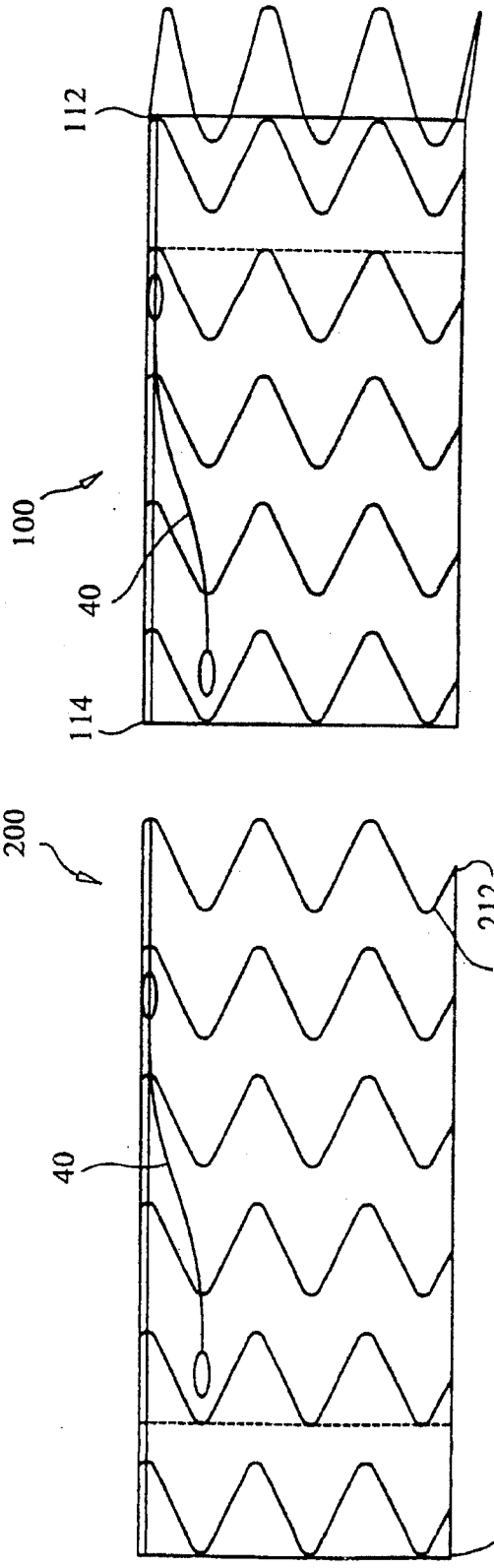

FIG. 9

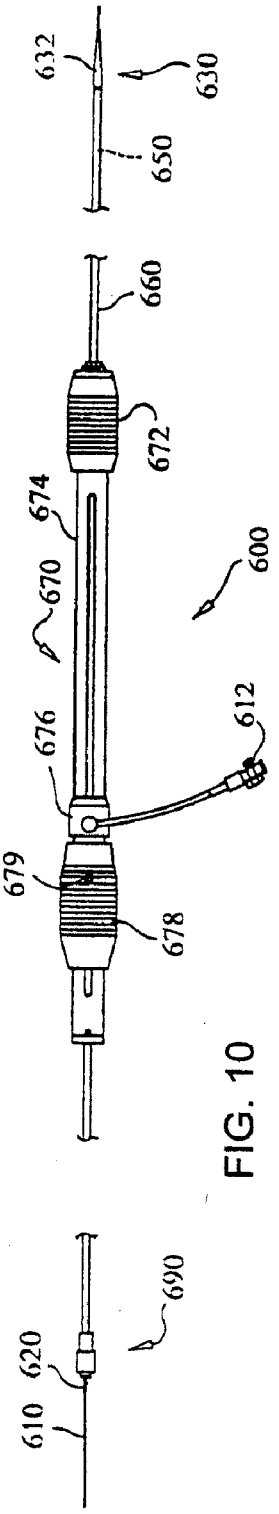

FIG. 10

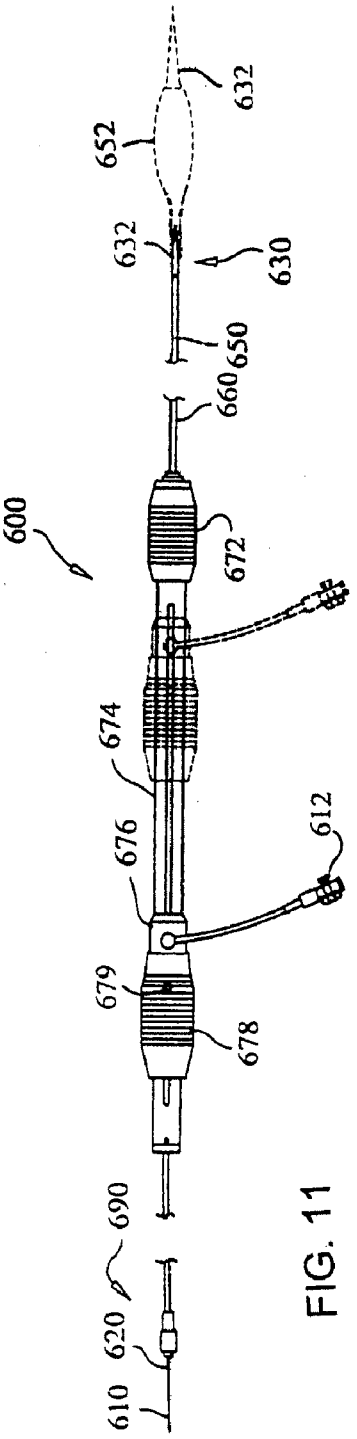

FIG. 11

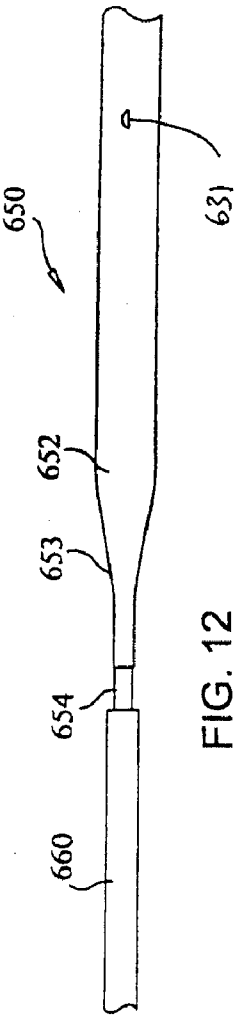

FIG. 12

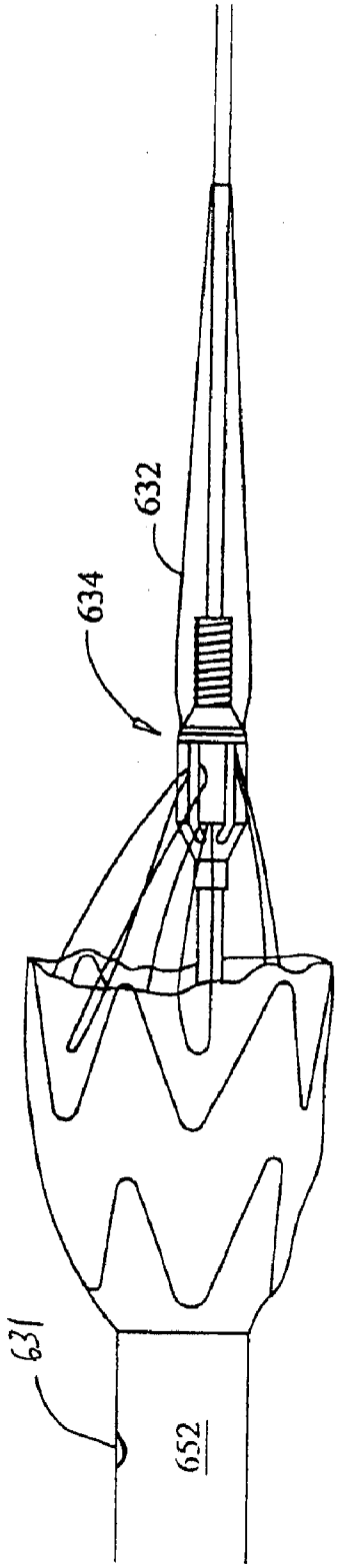

FIG. 13

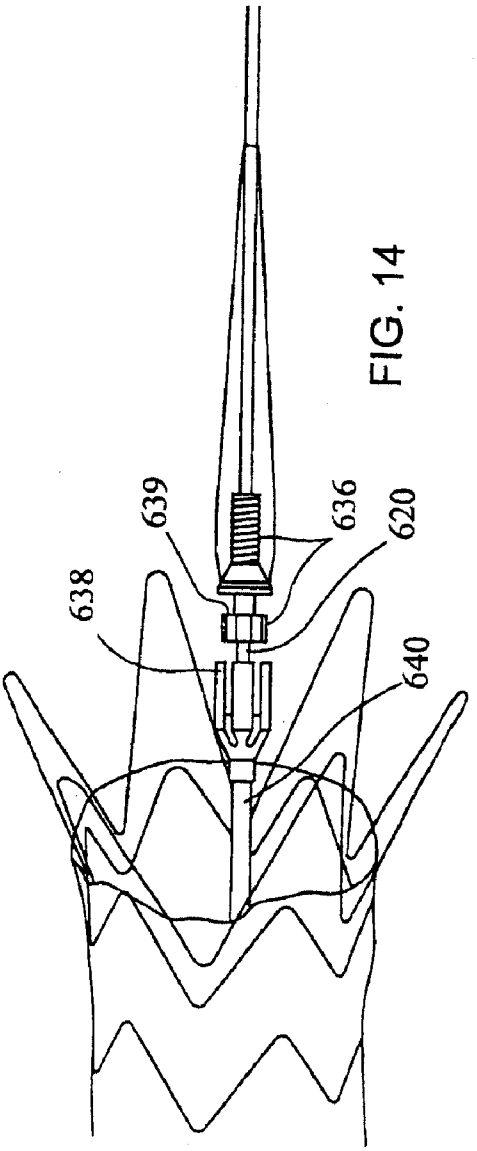

FIG. 14

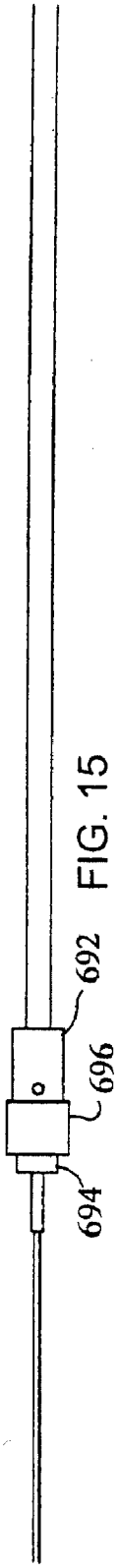

FIG. 15

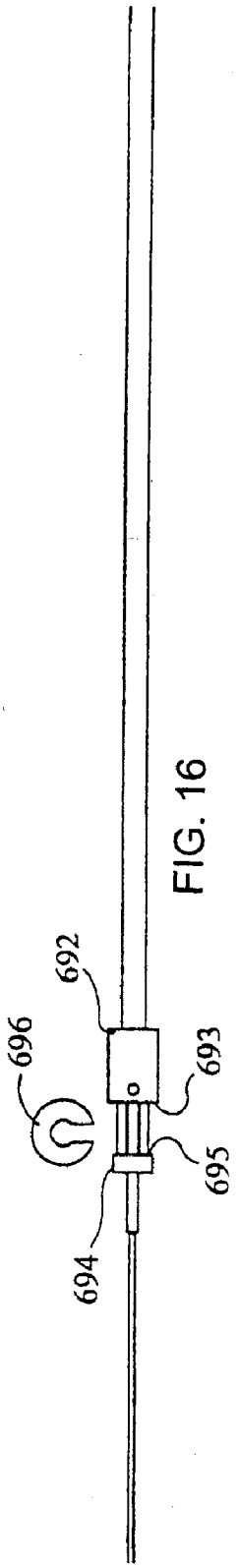

FIG. 16

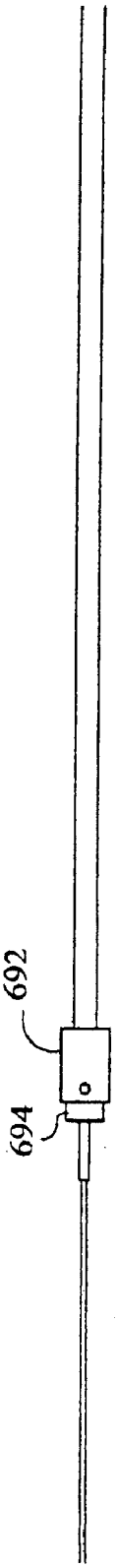

FIG. 17

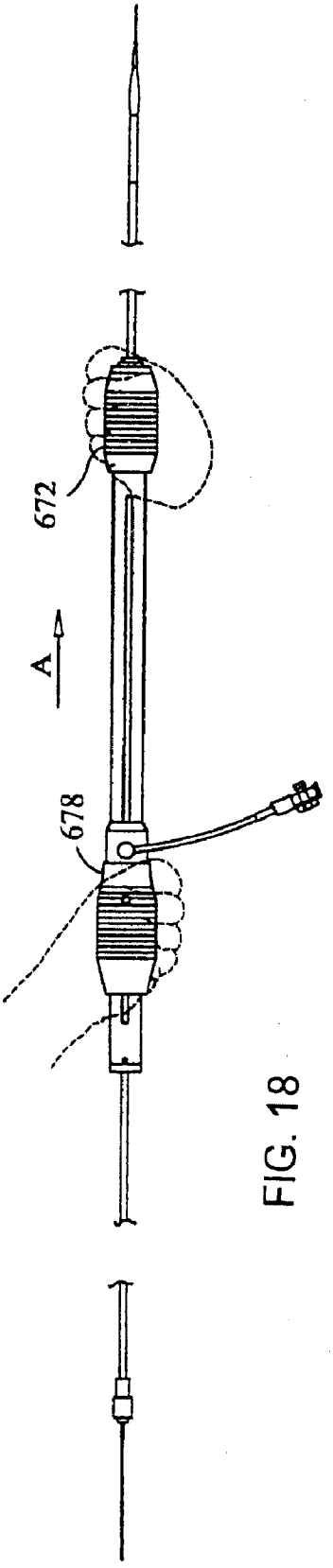

FIG. 18

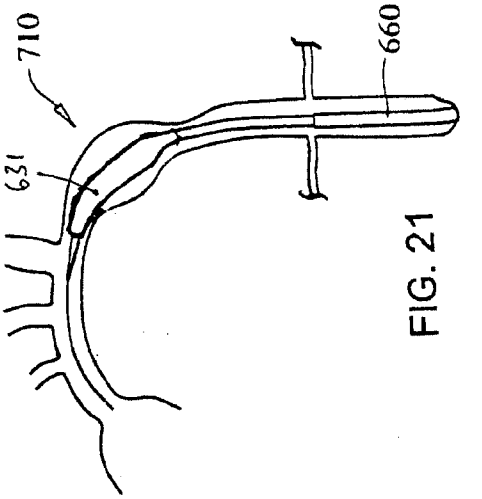

FIG. 21

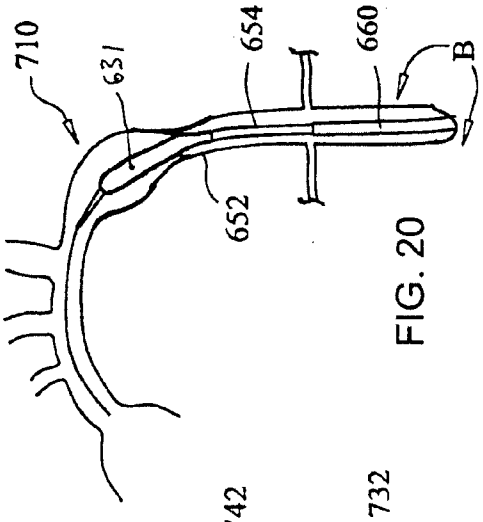

FIG. 20

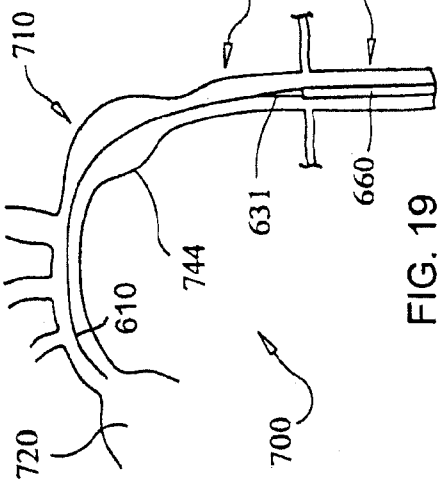

FIG. 19

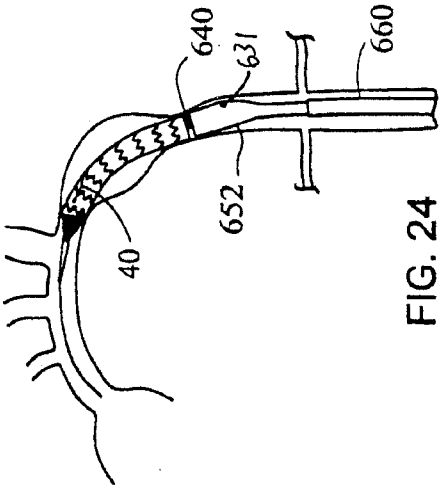

FIG. 24

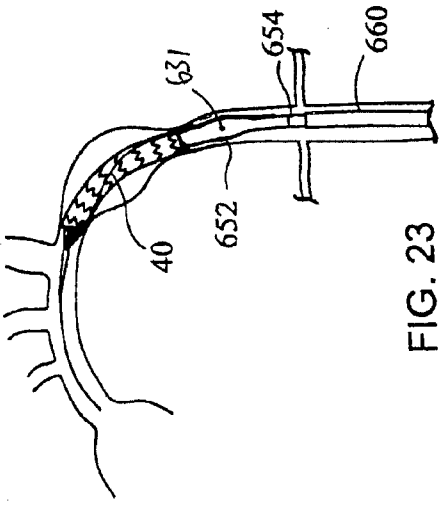

FIG. 23

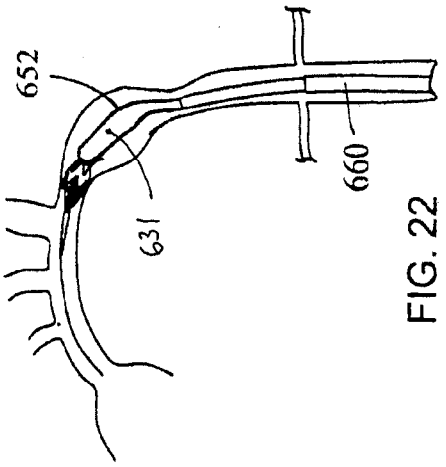

FIG. 22

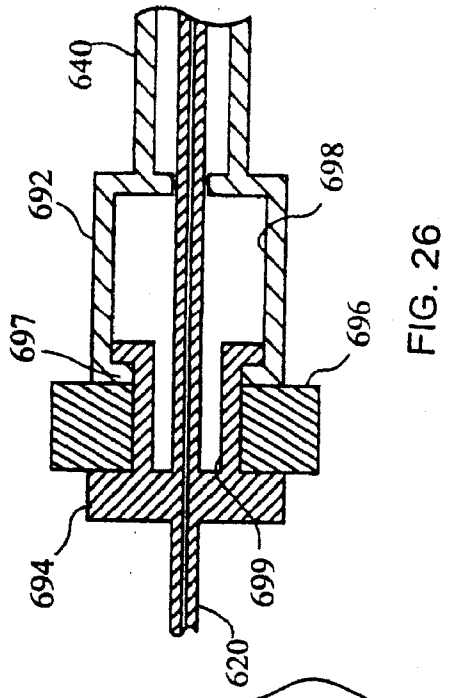

FIG. 26

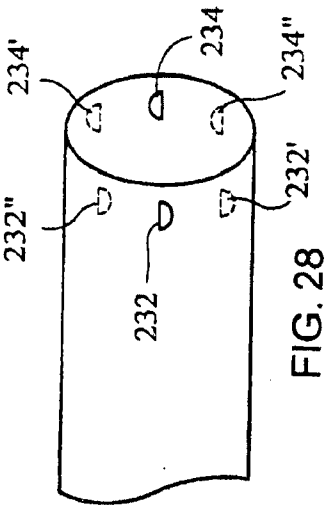

FIG. 28

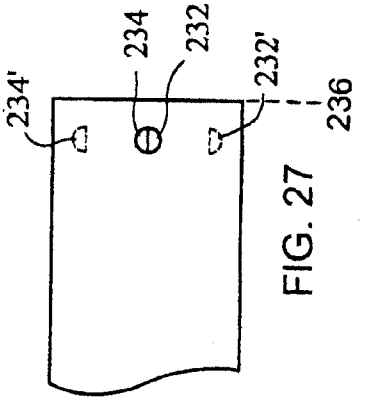

FIG. 27

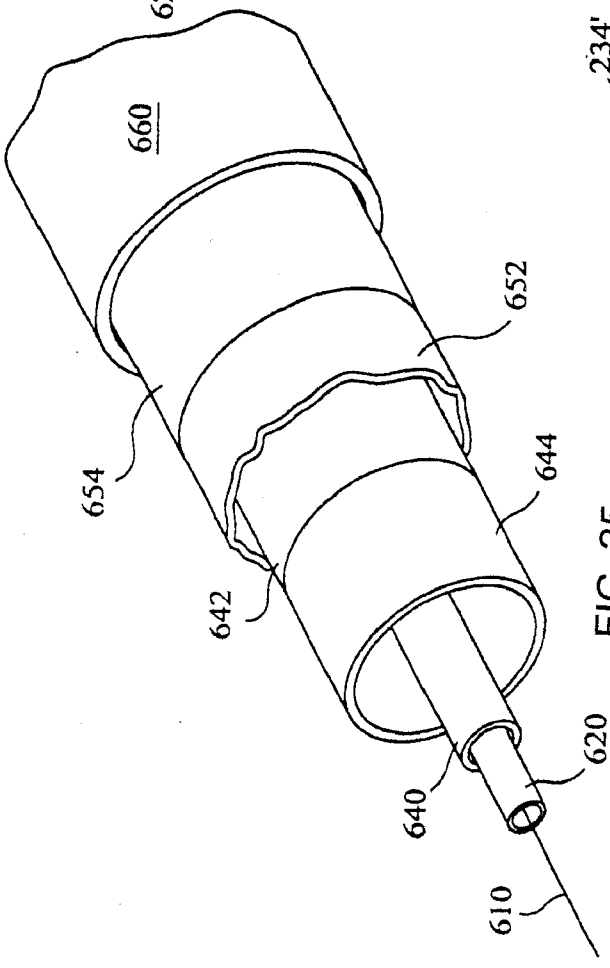

FIG. 25

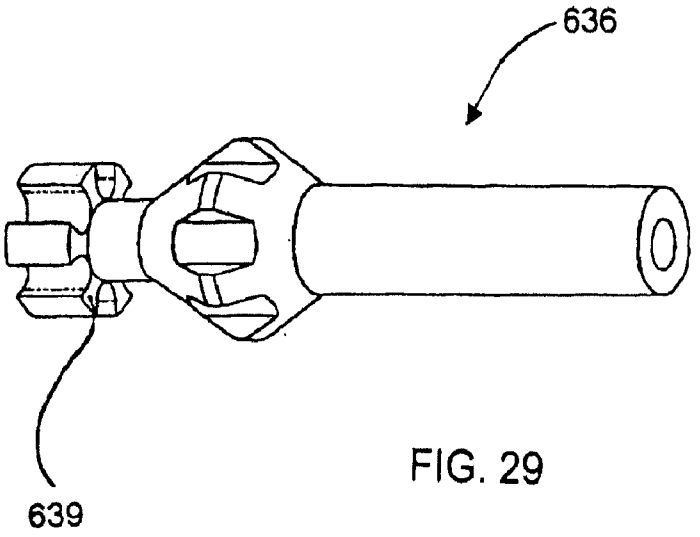

FIG. 29

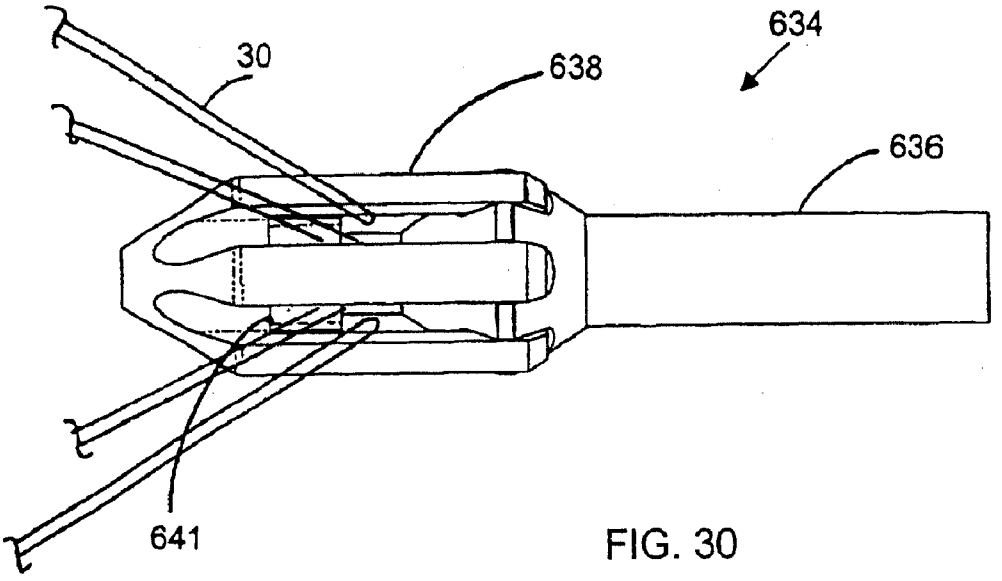

FIG. 30

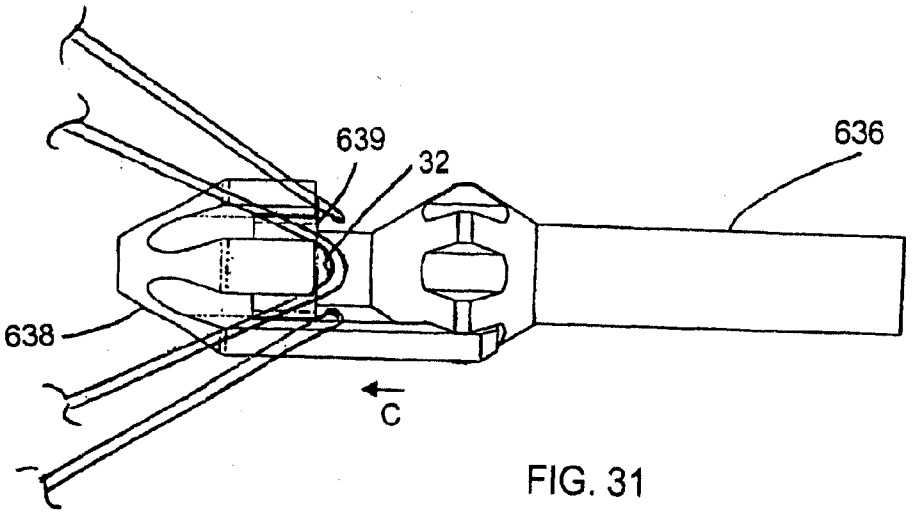

FIG. 31

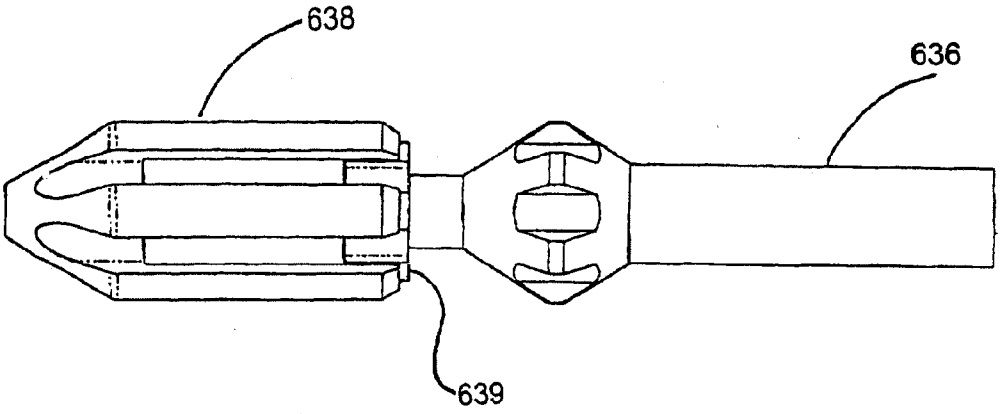

FIG. 32

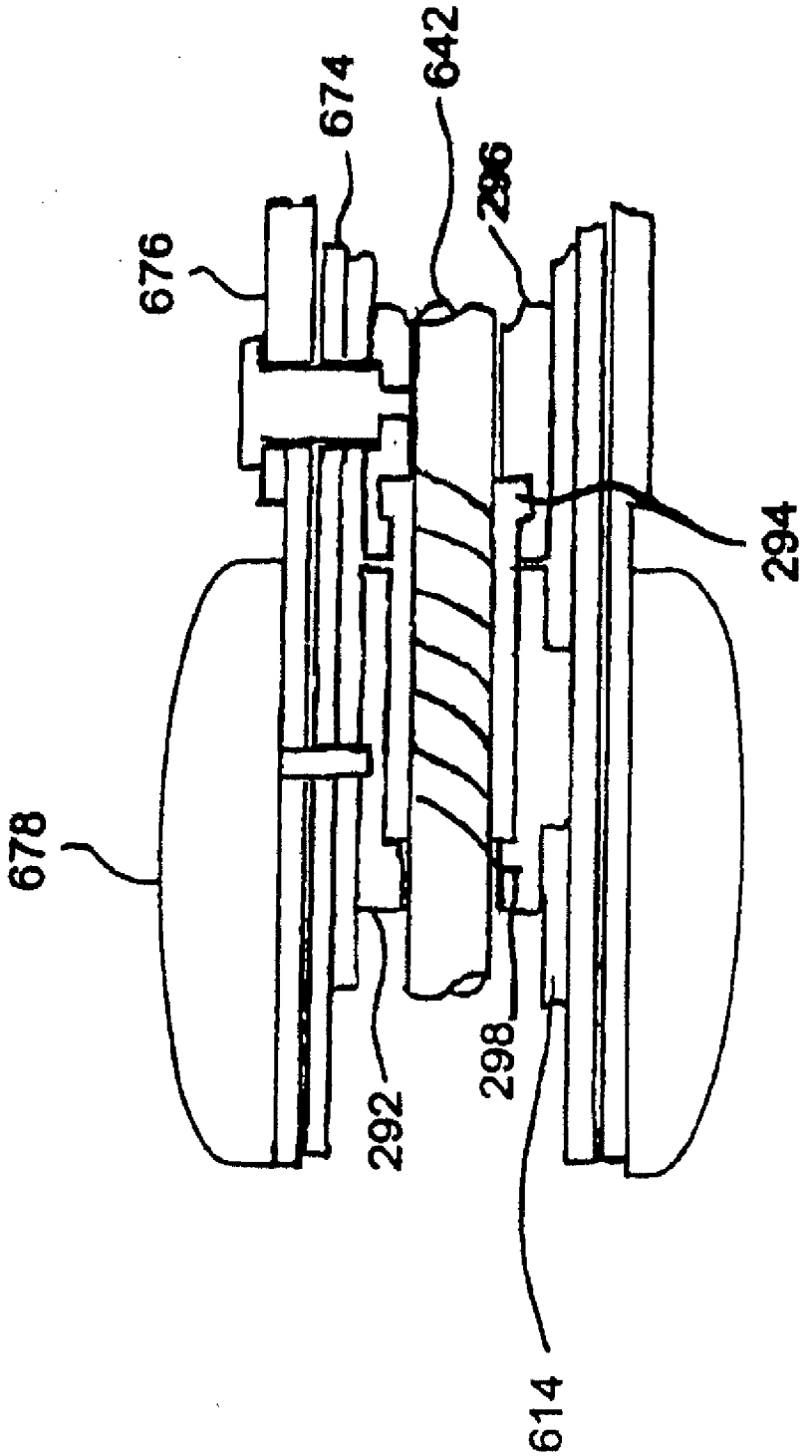

FIG. 33

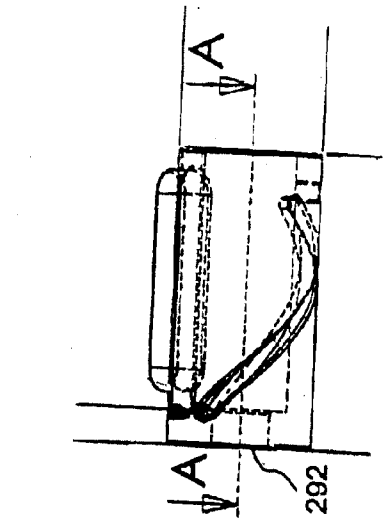

FIG. 36

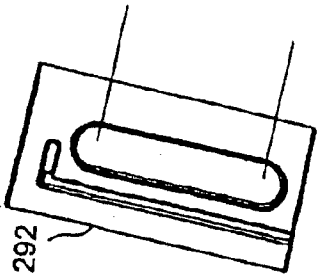

FIG. 35

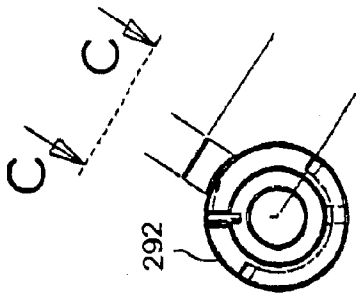

FIG. 34

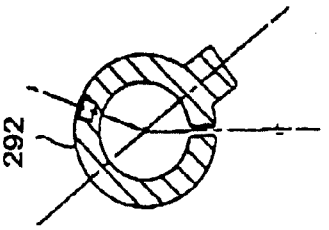

FIG. 39

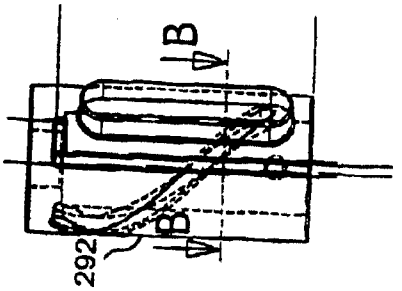

FIG. 38

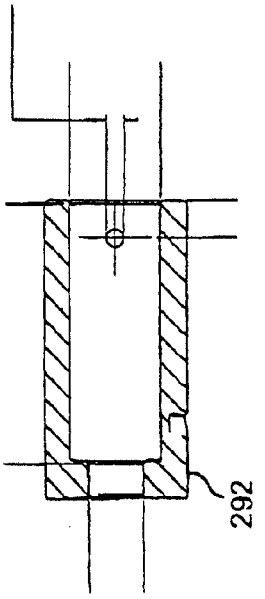

FIG. 37

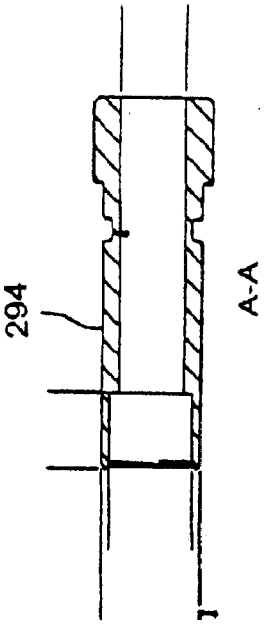

FIG. 42

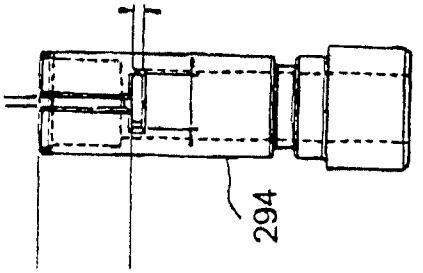

FIG. 43



FIG. 40

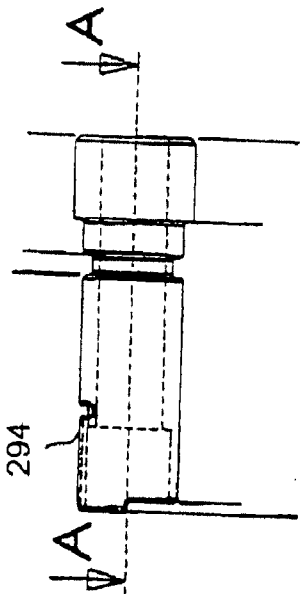

FIG. 41

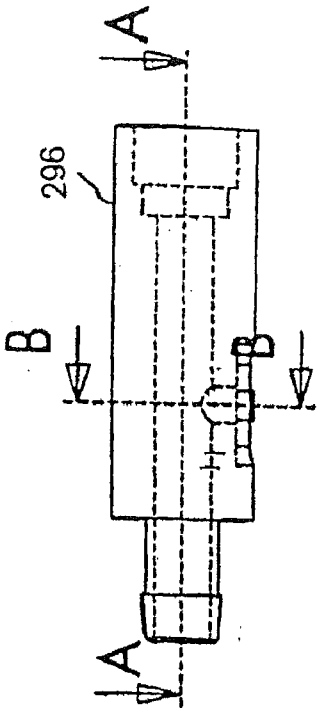

FIG. 44

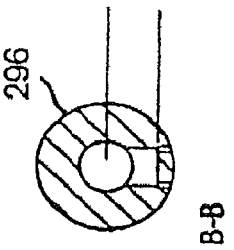

FIG. 46

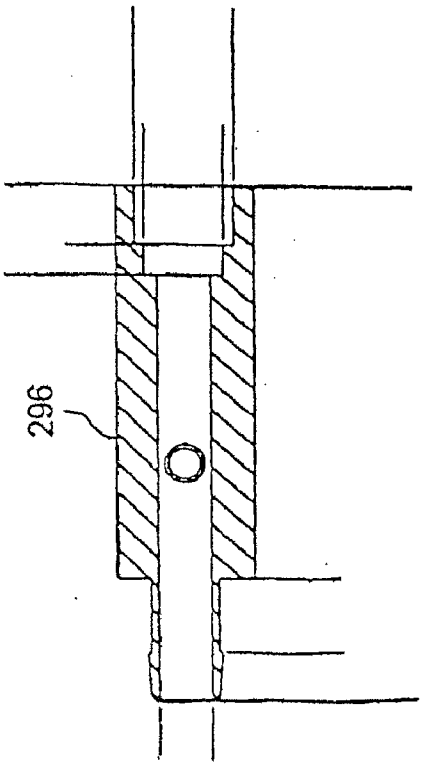

FIG. 45

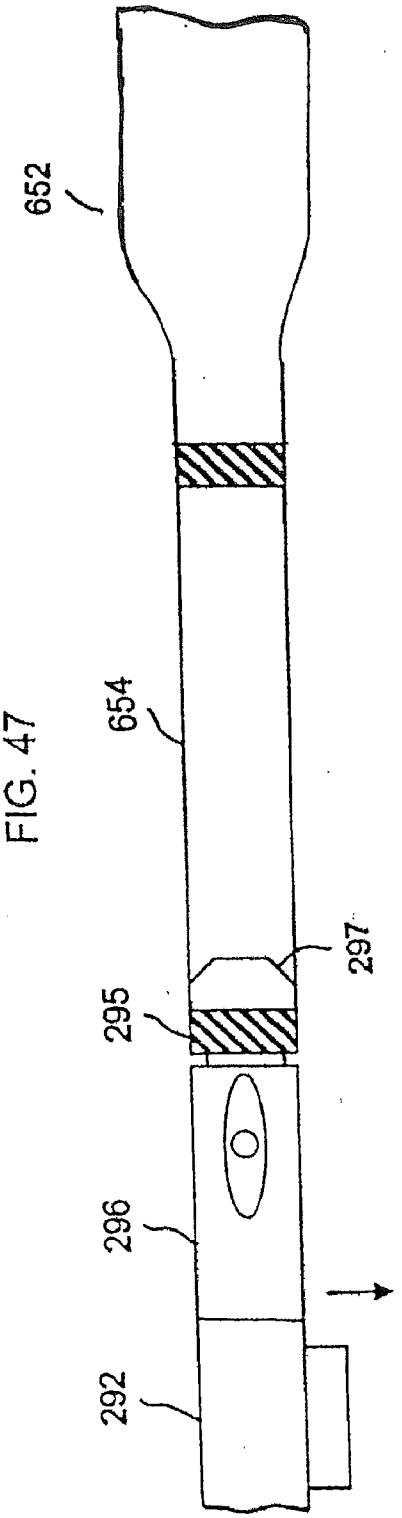

FIG. 47

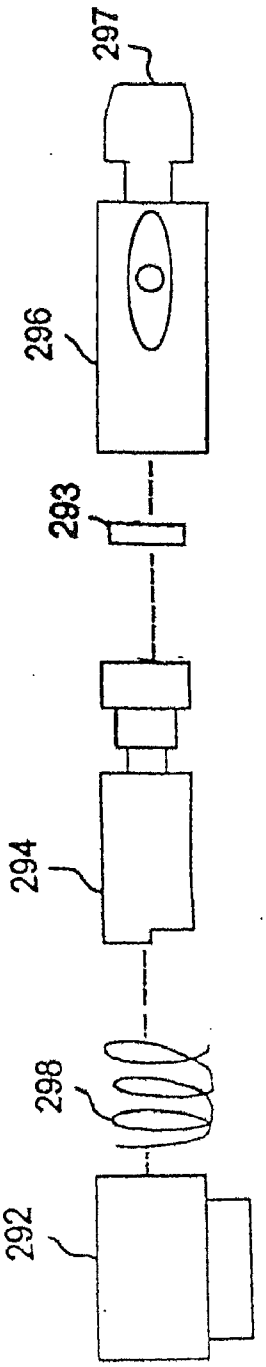

FIG. 48

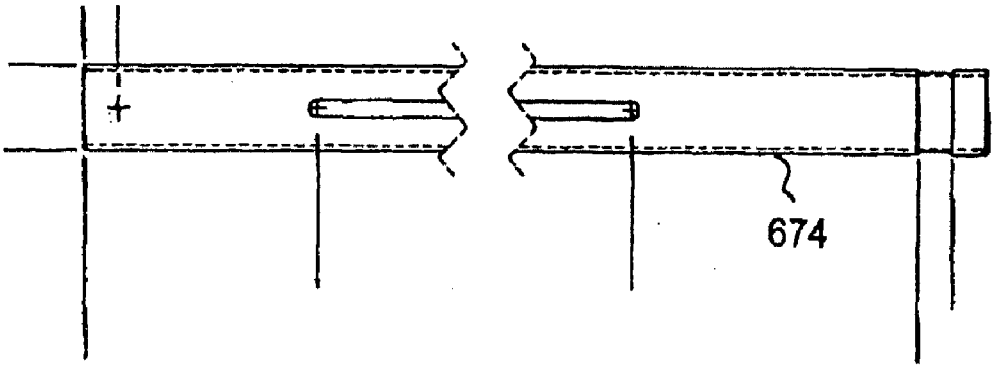

FIG. 49

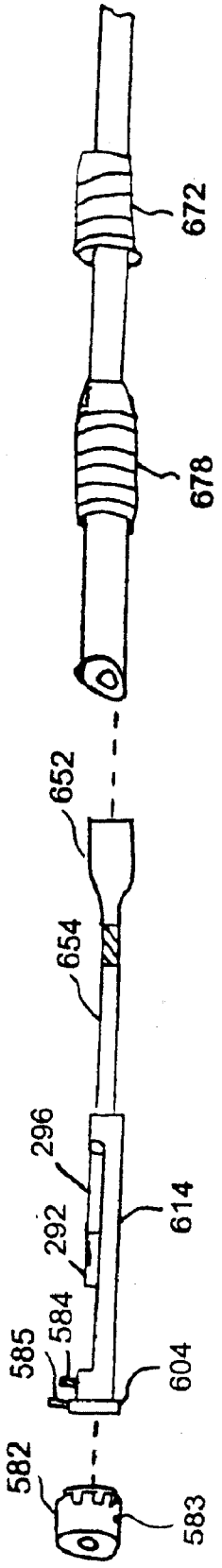
672
678
652
654
296
292
614
585
584
604
582
583

FIG. 50

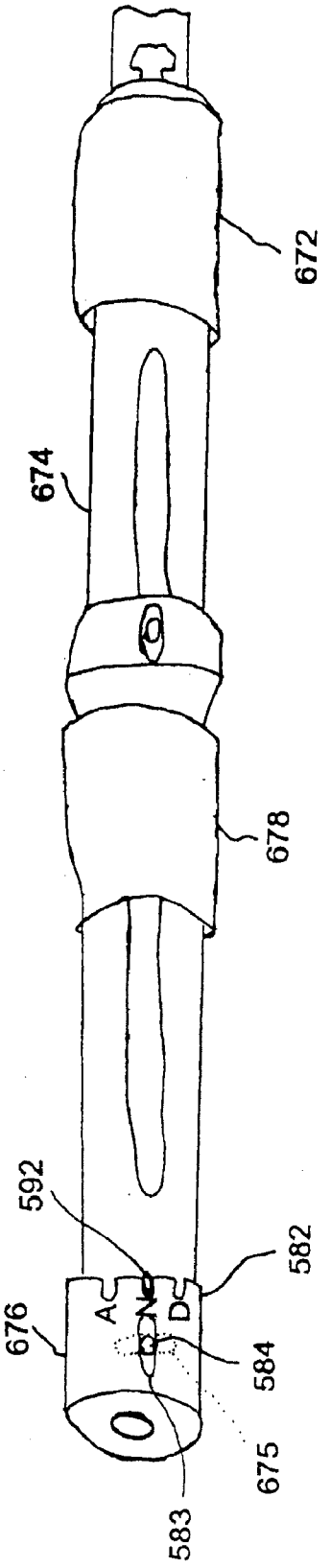
672
674
678
592
582
676
A
N
D
584
675
583

FIG. 51

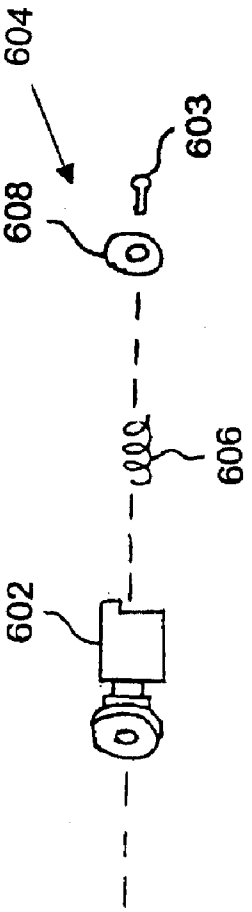

FIG. 52

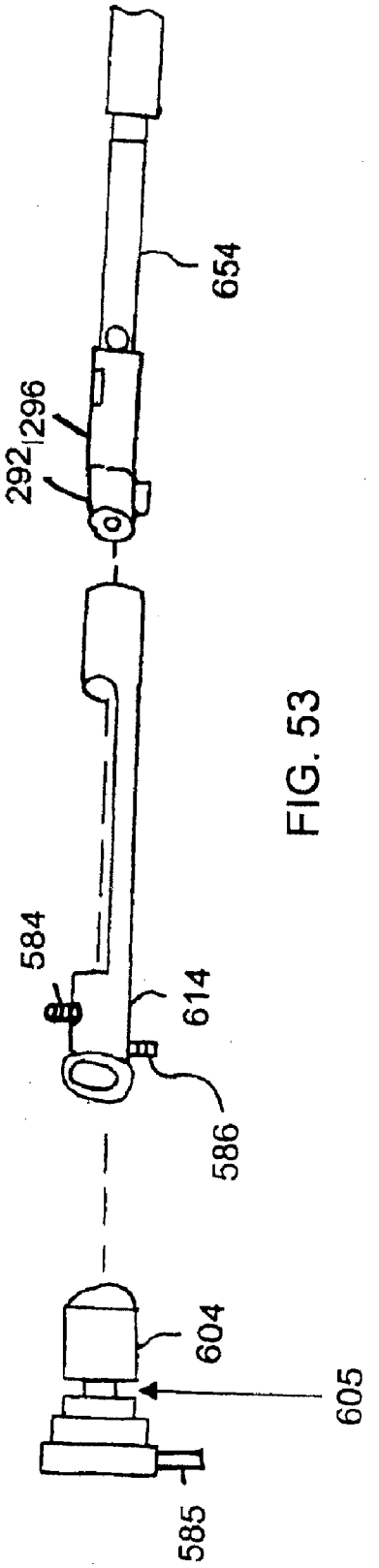

FIG. 53

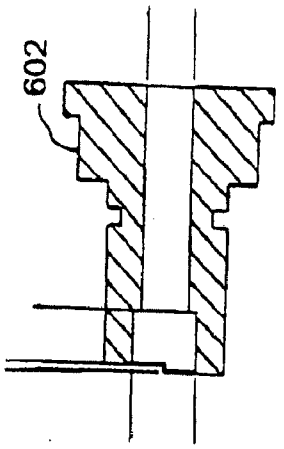

FIG. 56

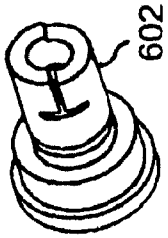

FIG. 54

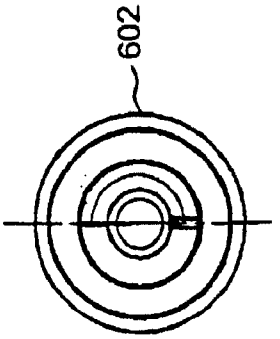

FIG. 58

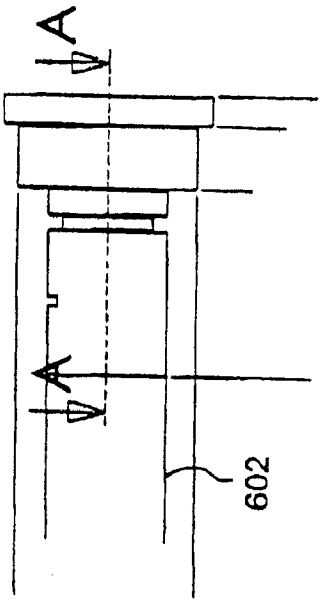

FIG. 55

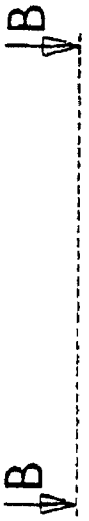

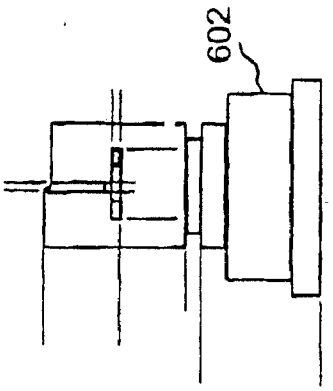

FIG. 57

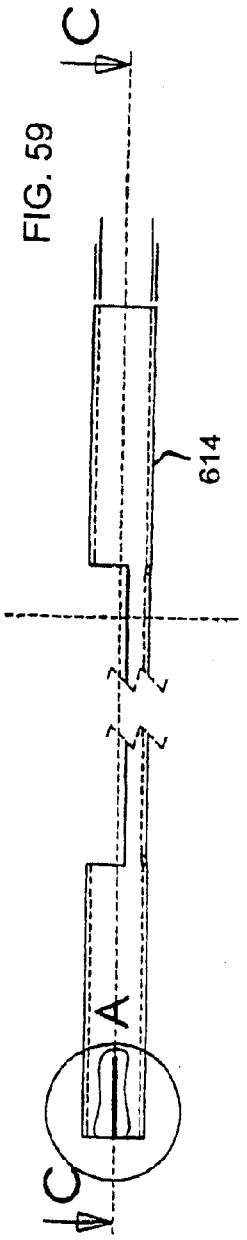

FIG. 59

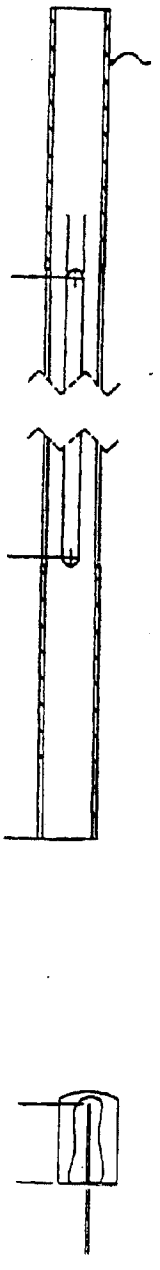

FIG. 61

FIG. 60

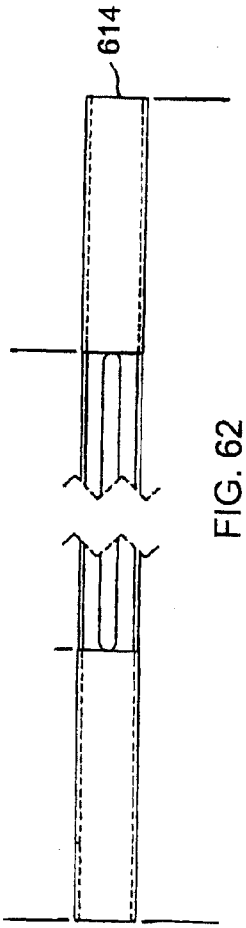

FIG. 62

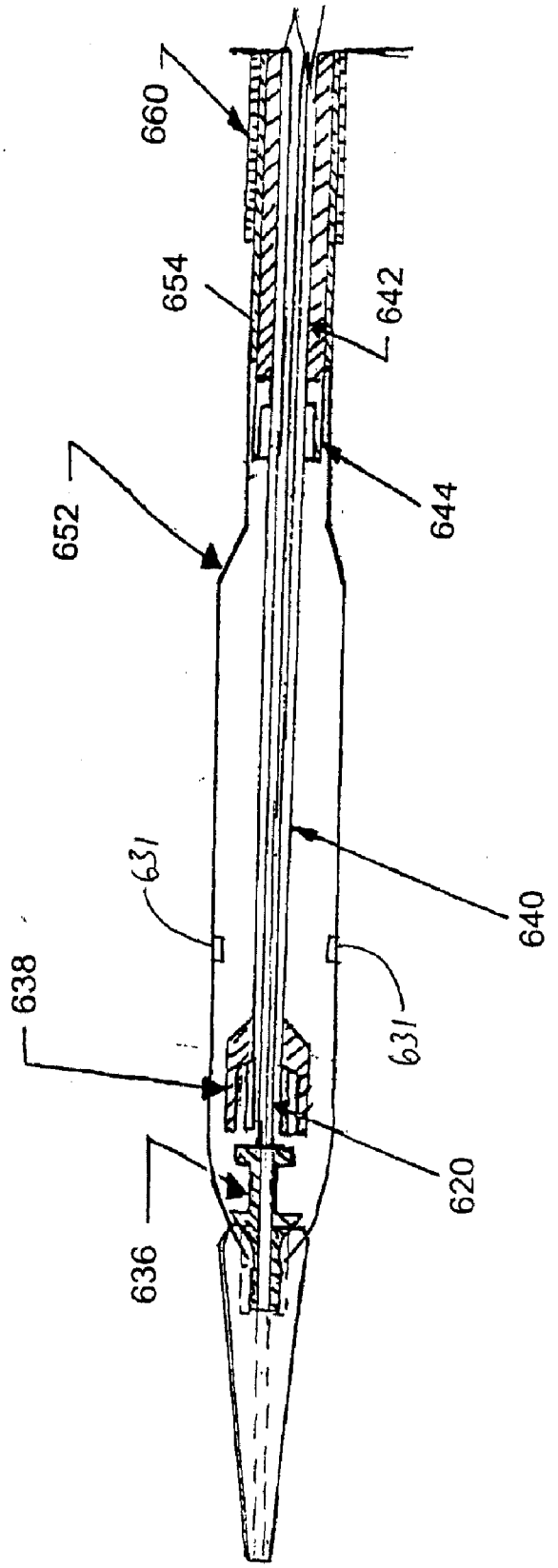

FIG. 63

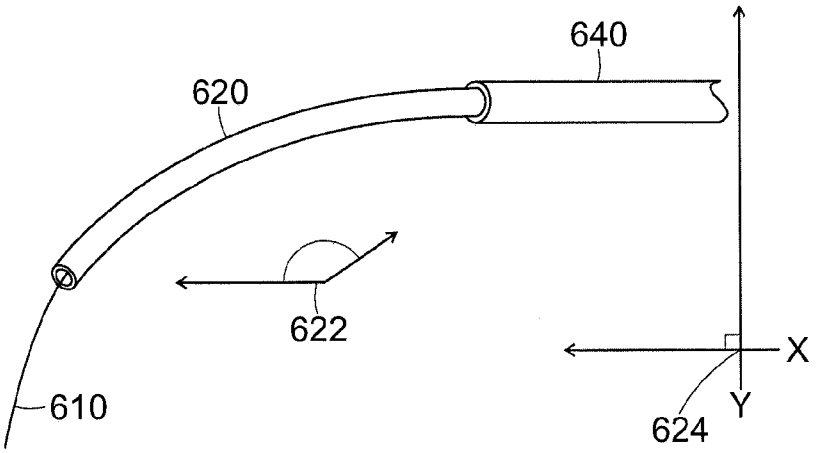

FIG. 64

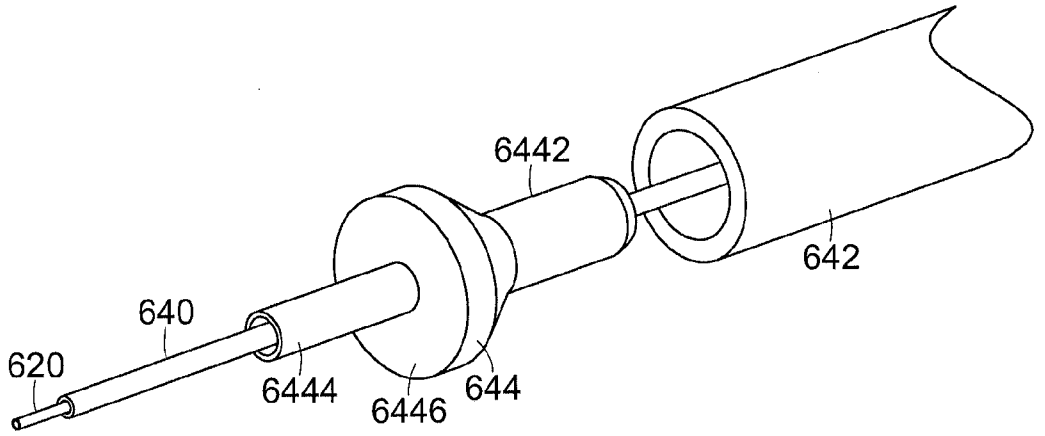

FIG. 68

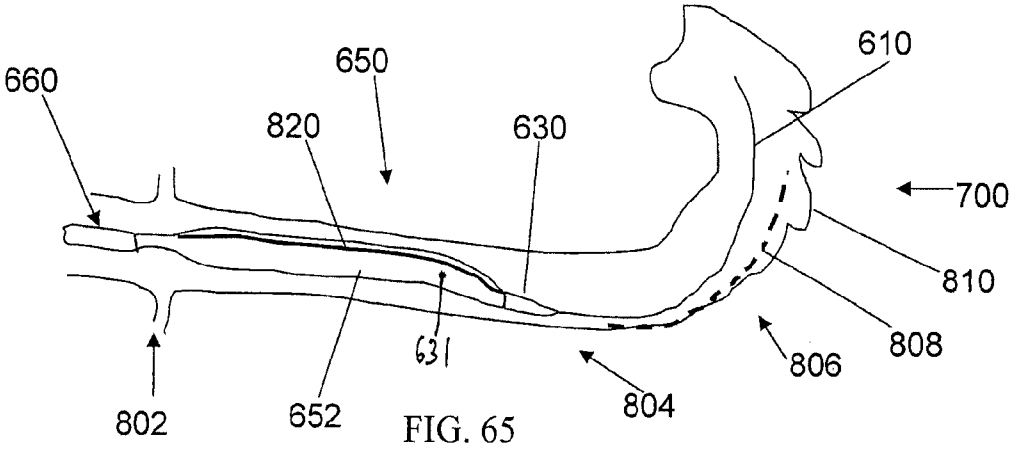

FIG. 65

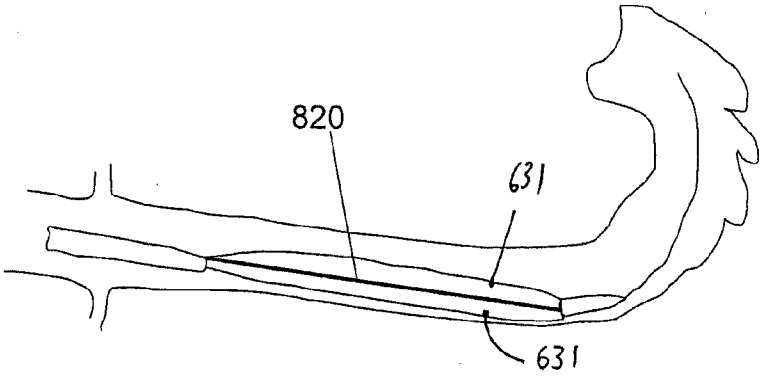

FIG. 66

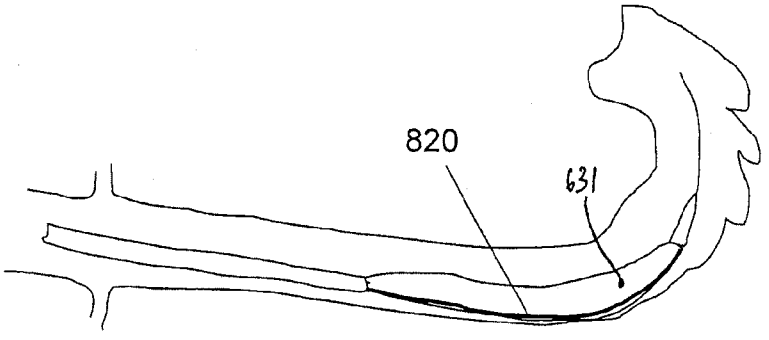

FIG. 67



FIG. 69

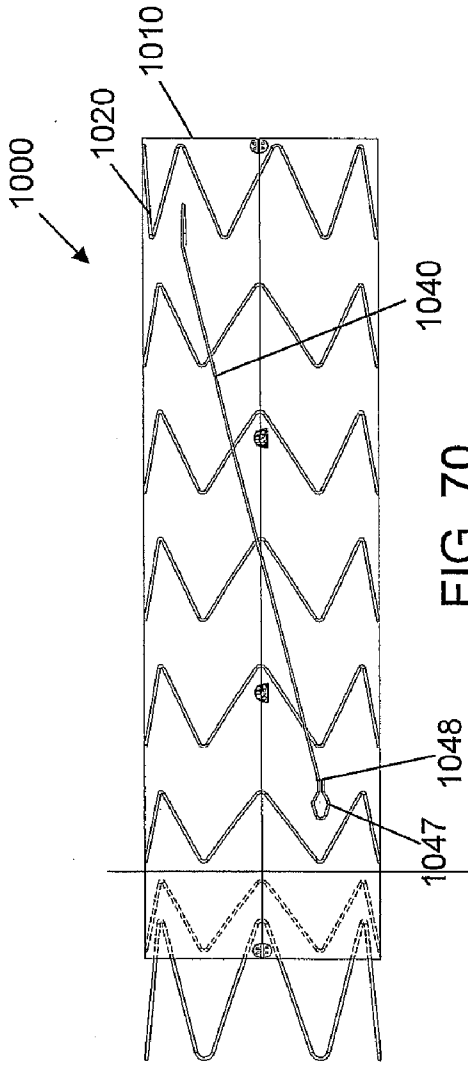

FIG. 70

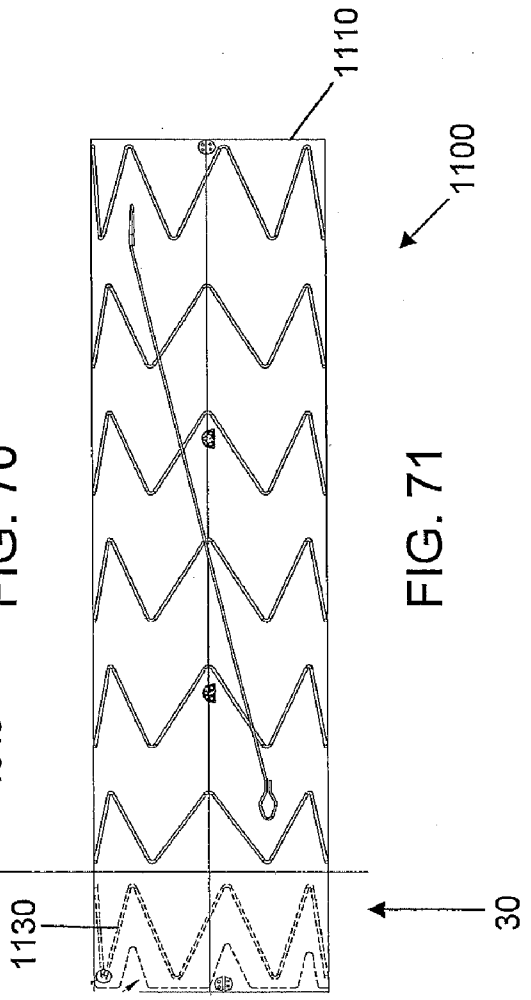

FIG. 71

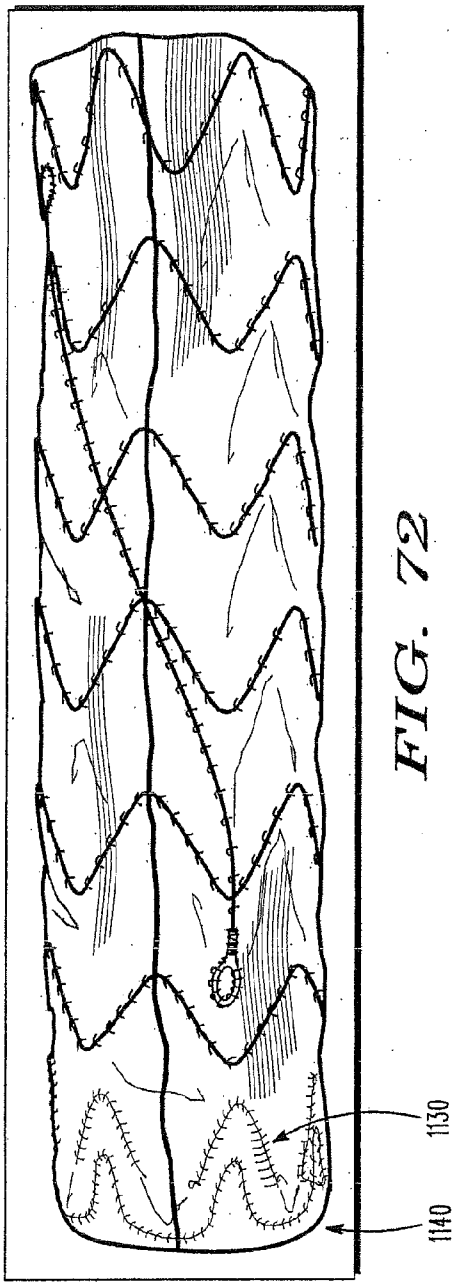

FIG. 72

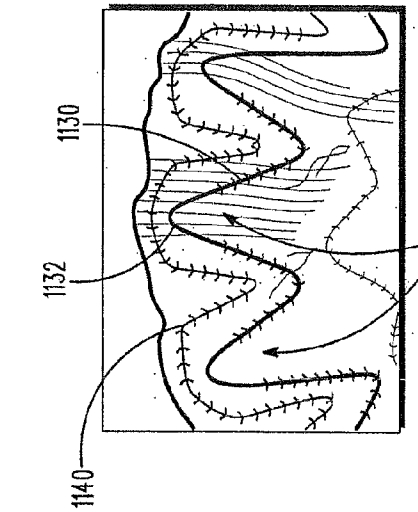

FIG. 74

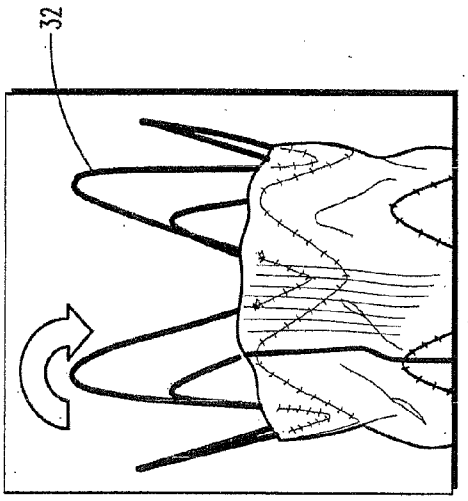

FIG. 73

FIG. 75

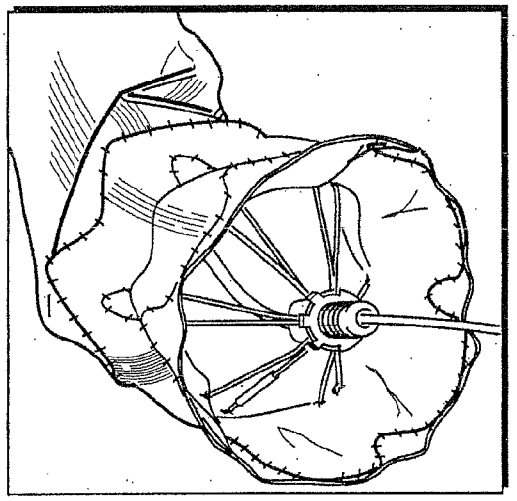

FIG. 77



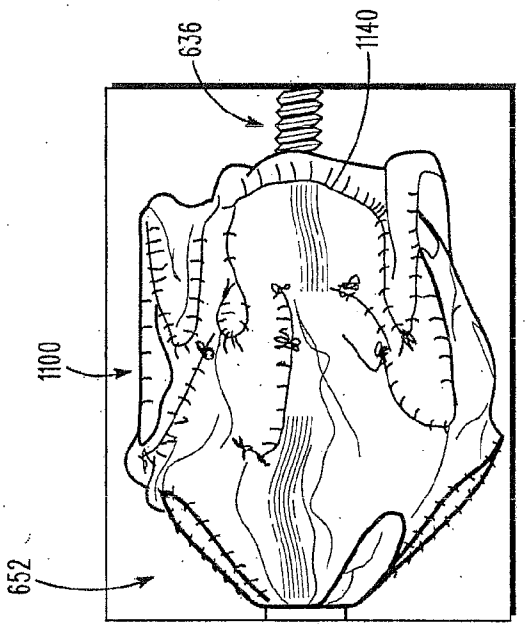

FIG. 76

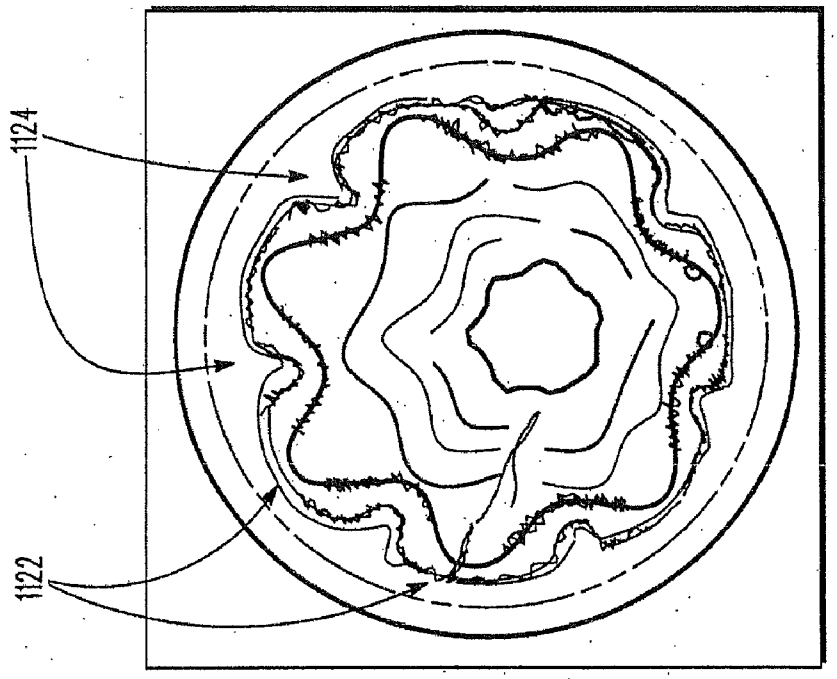

FIG. 79

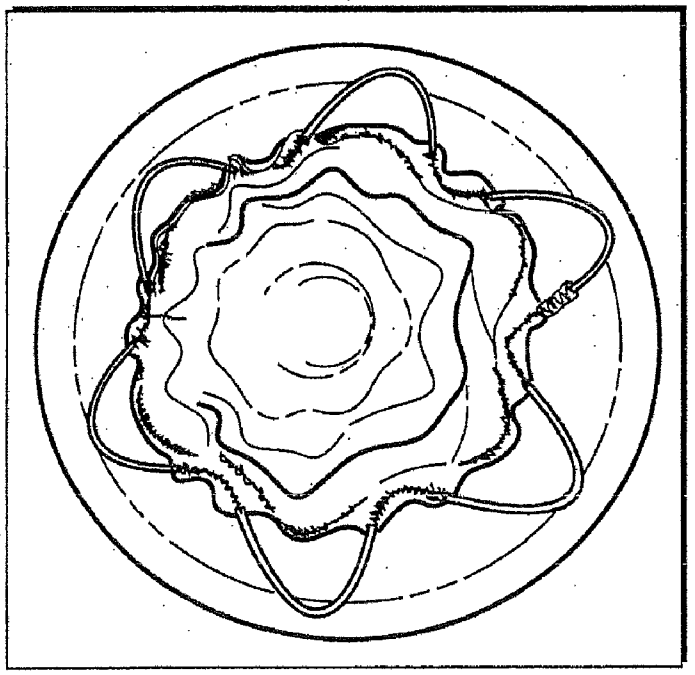

FIG. 78

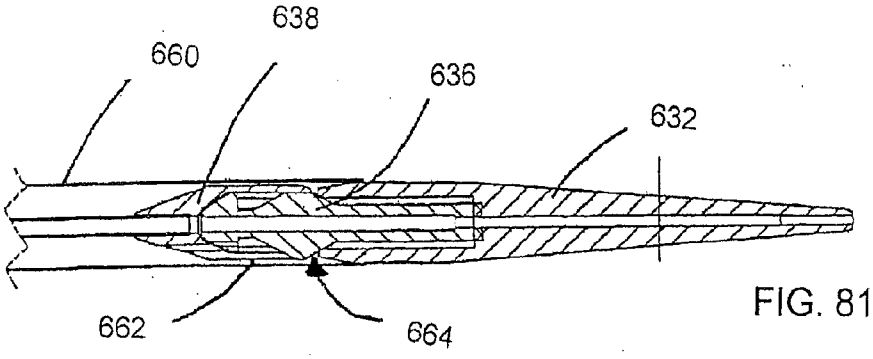

FIG. 81

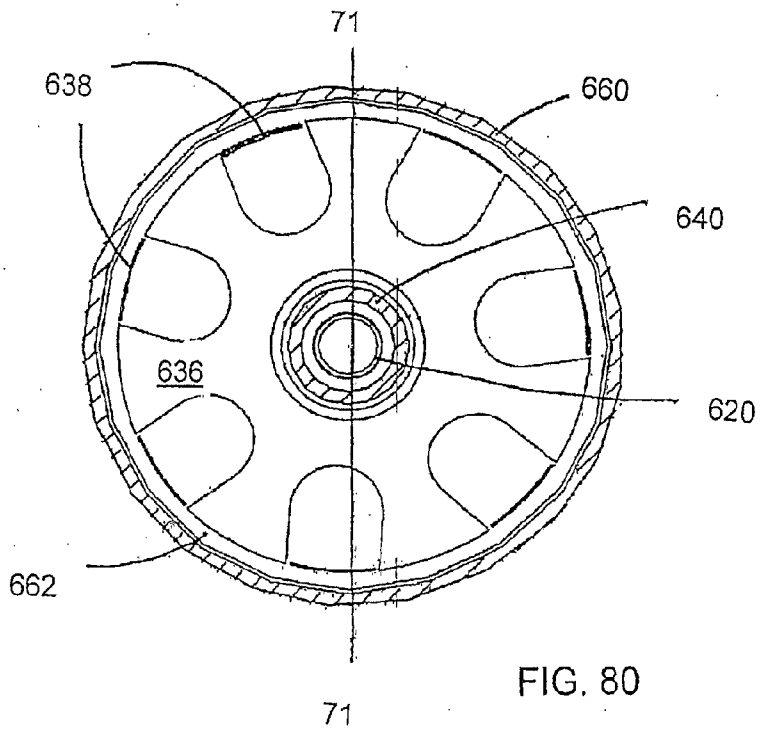

FIG. 80

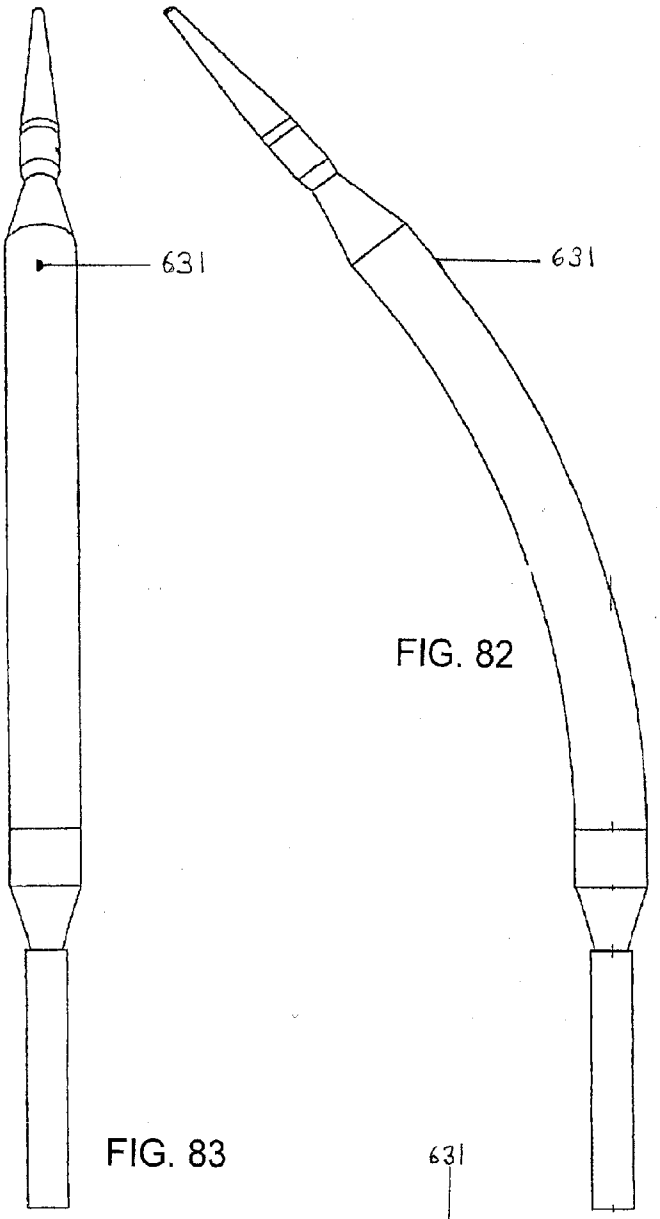

FIG. 83

FIG. 82

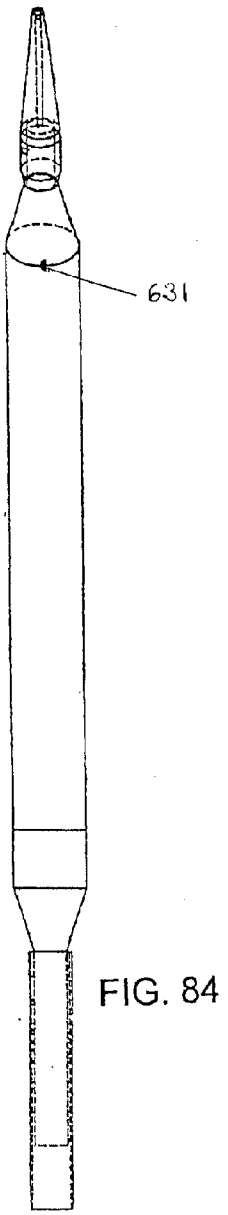

FIG. 84

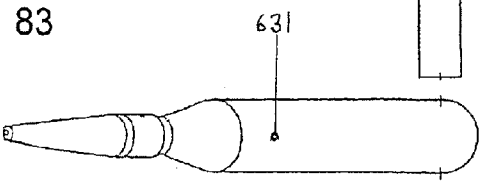

FIG. 85

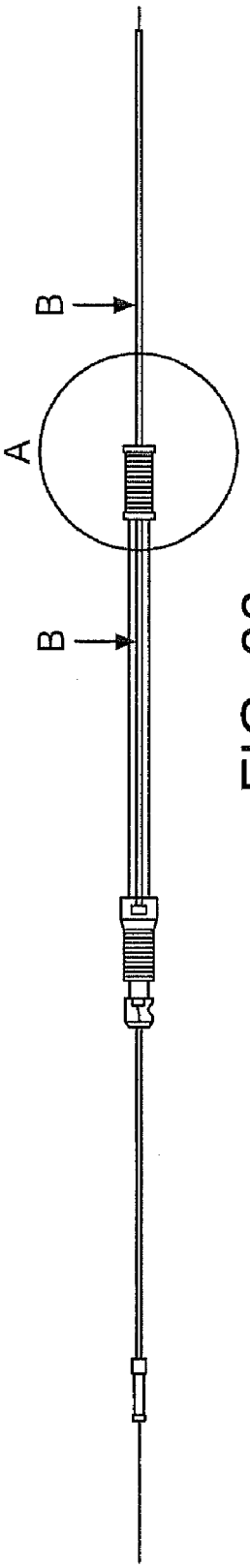

FIG. 86

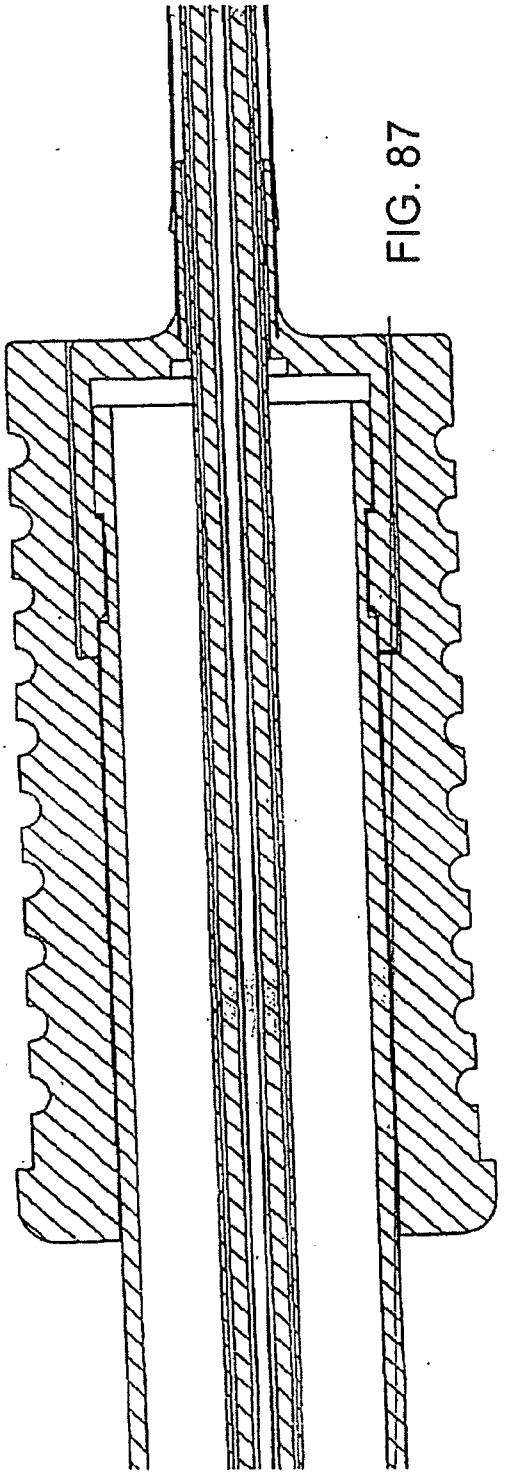

FIG. 87

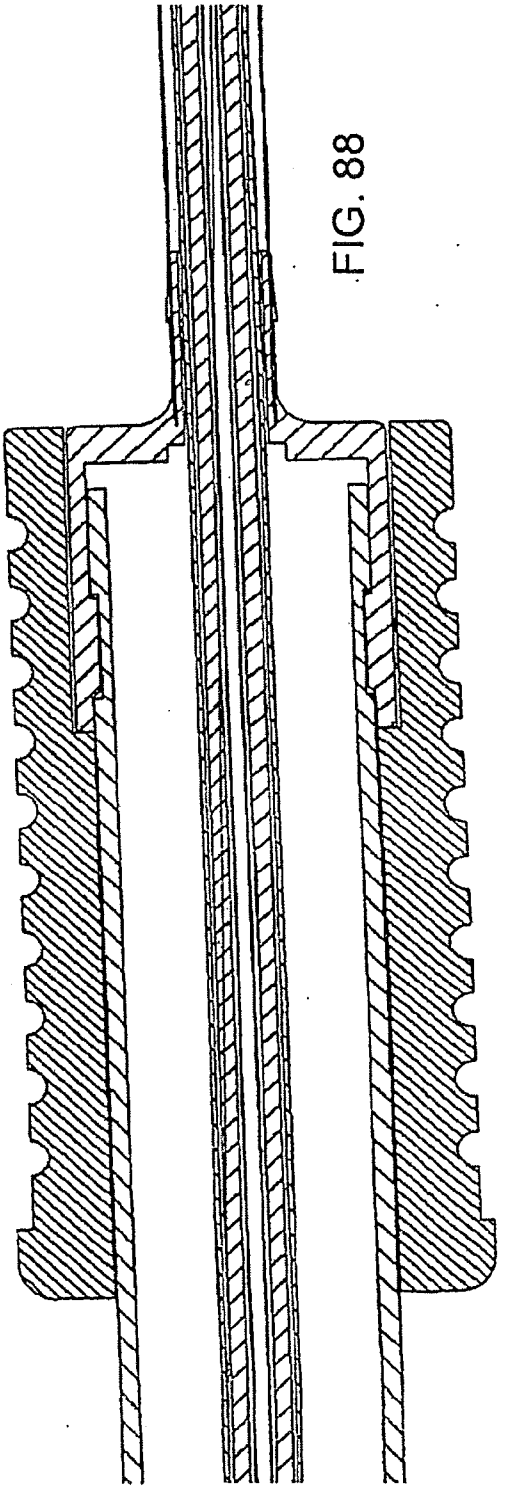

FIG. 88

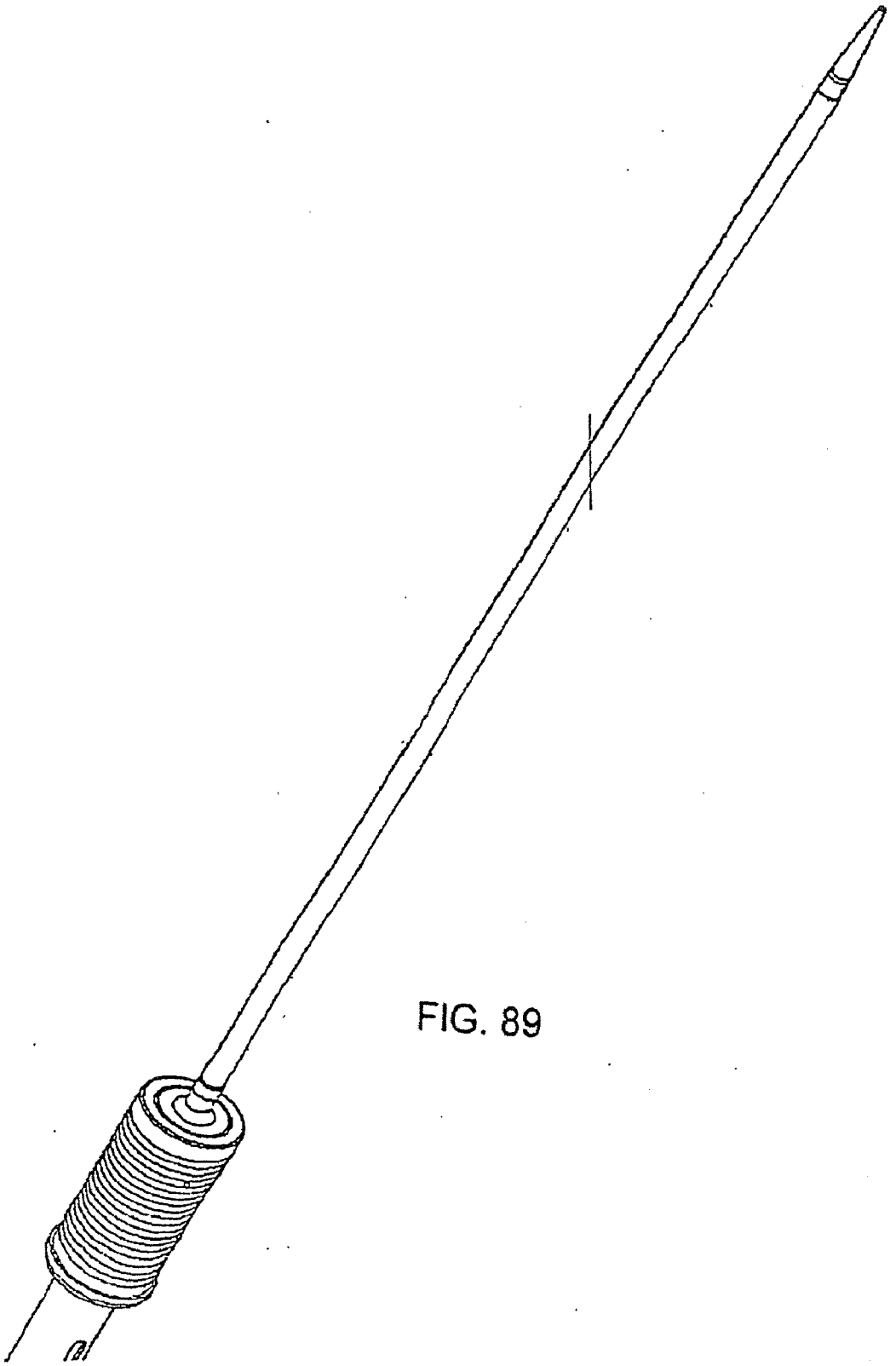

FIG. 89

FIG. 90

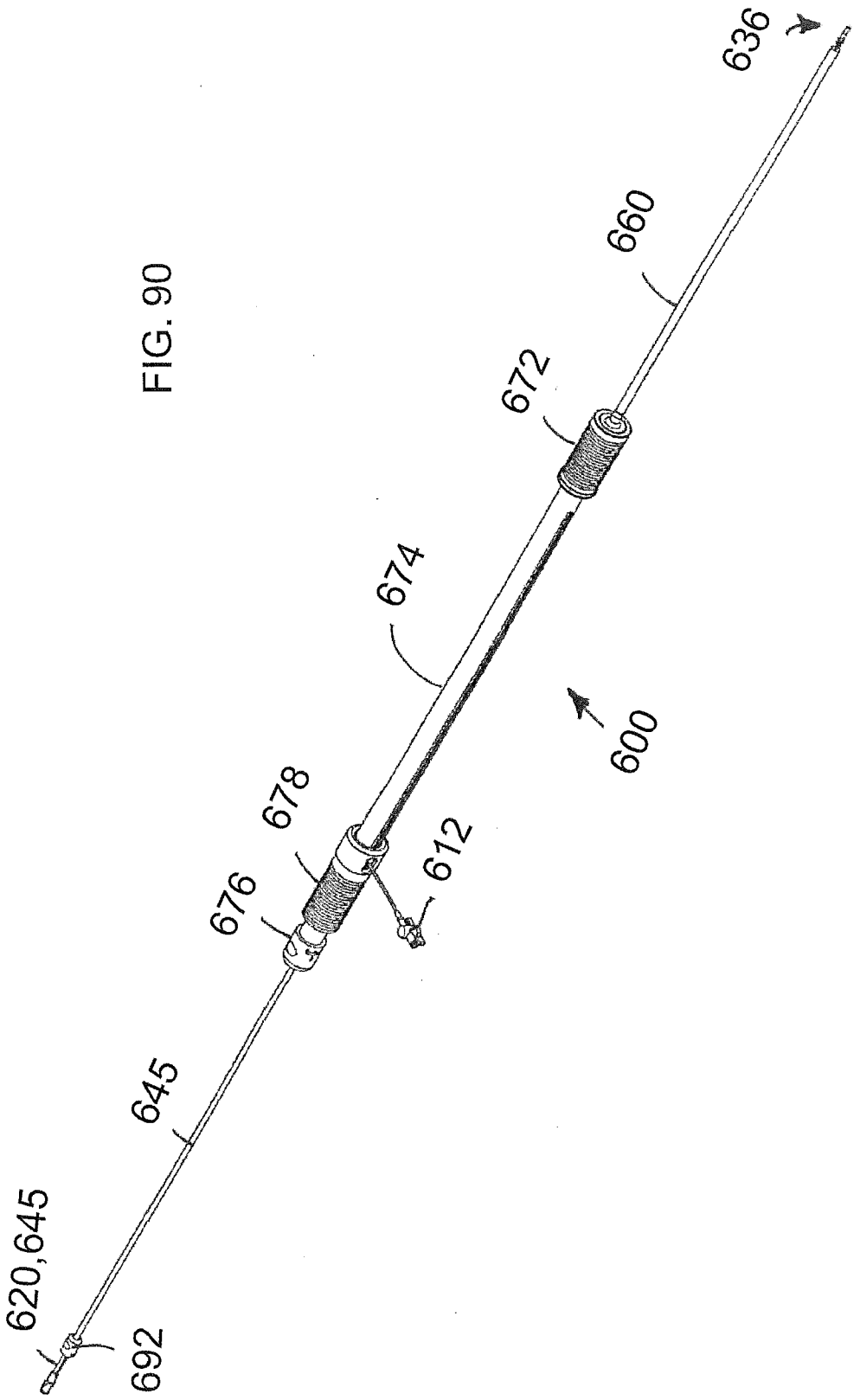

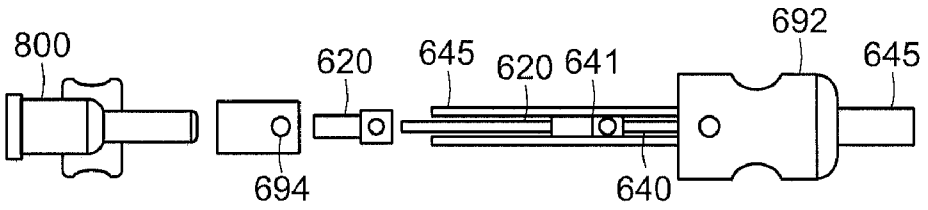
800
620
645
620
641
692
645
694
640

FIG. 91

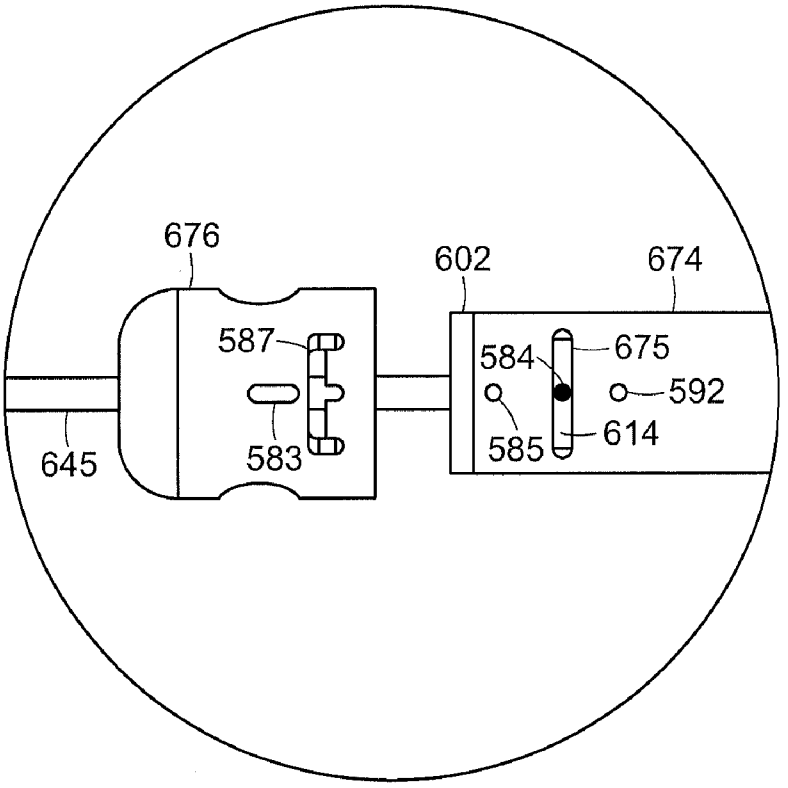
676
602
674
587
584
675
592
645
583
585
614

FIG. 92

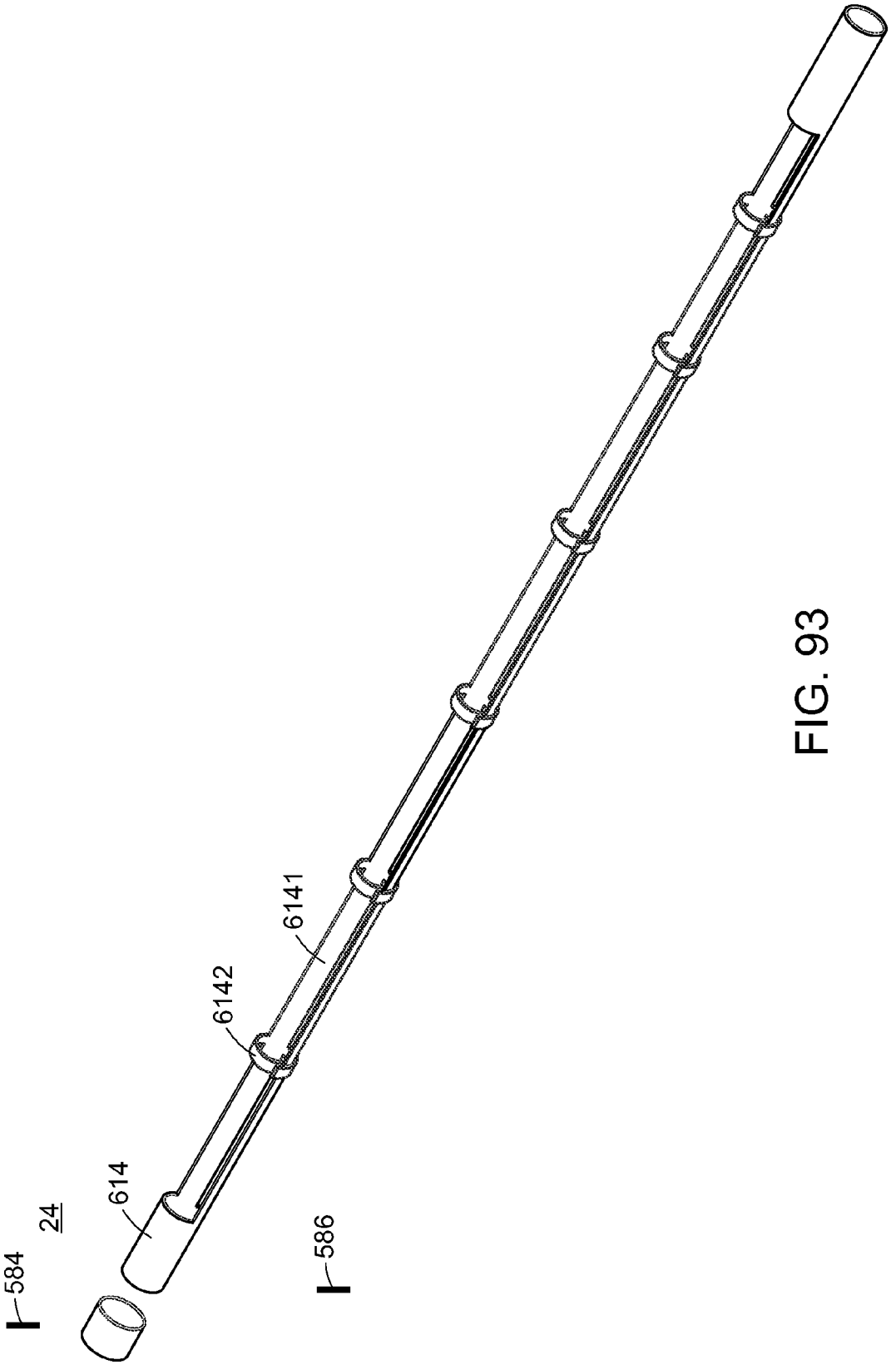

FIG. 93

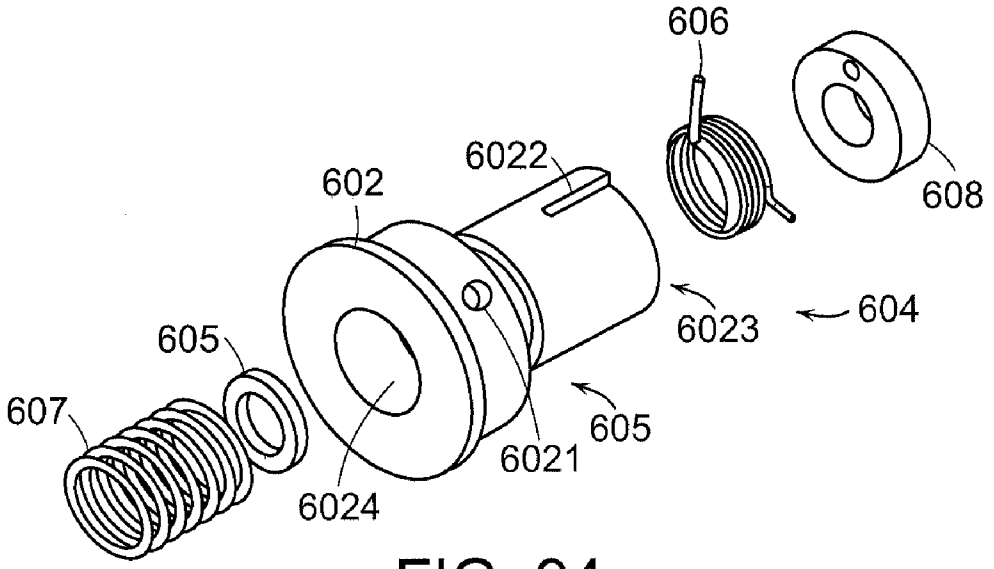

FIG. 94

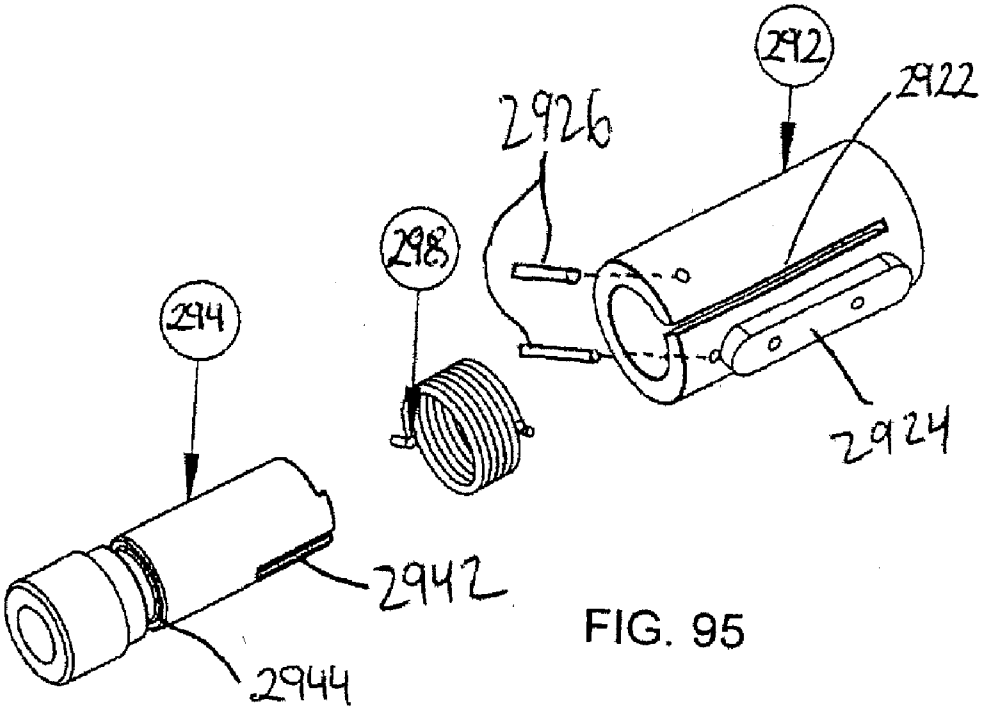

FIG. 95

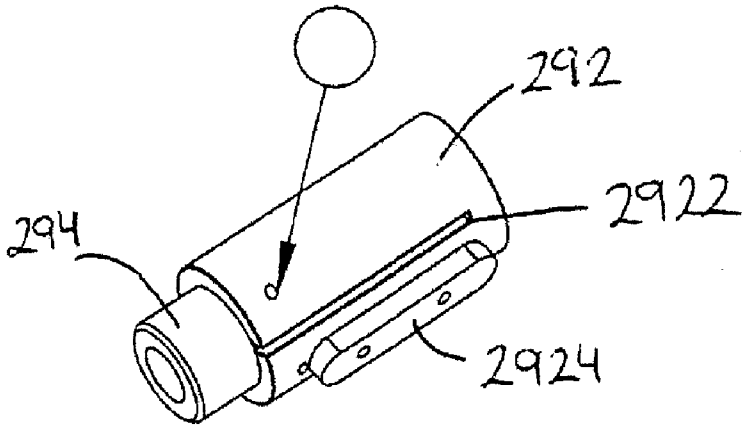

FIG. 96

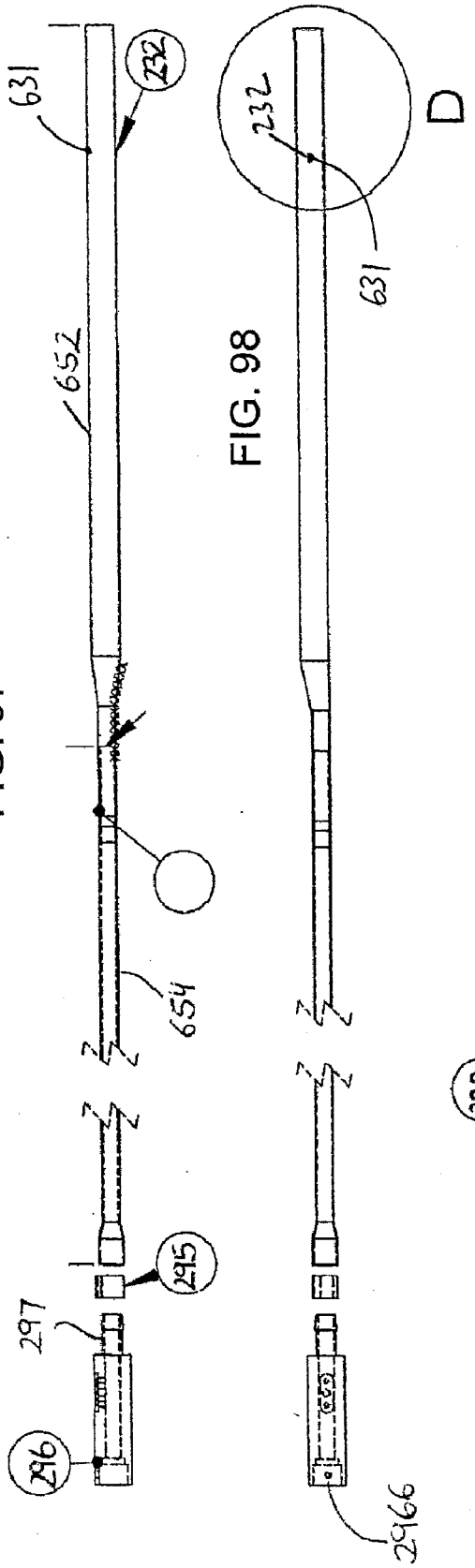

FIG. 97

FIG. 98

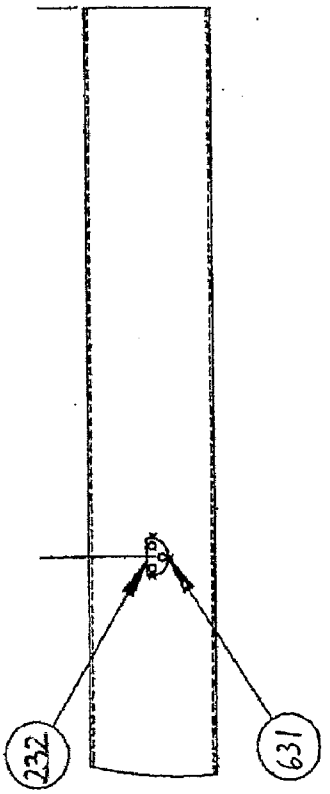

FIG. 99

FIG. 100

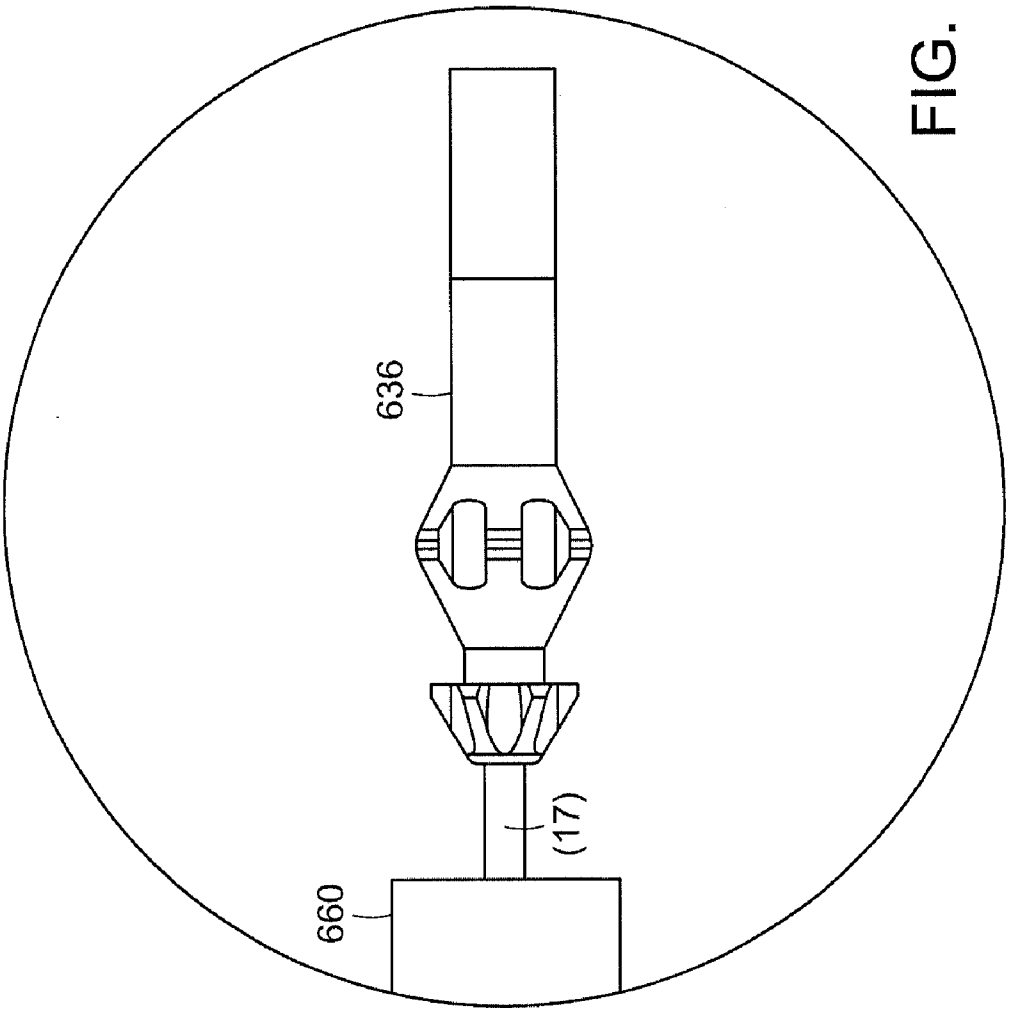

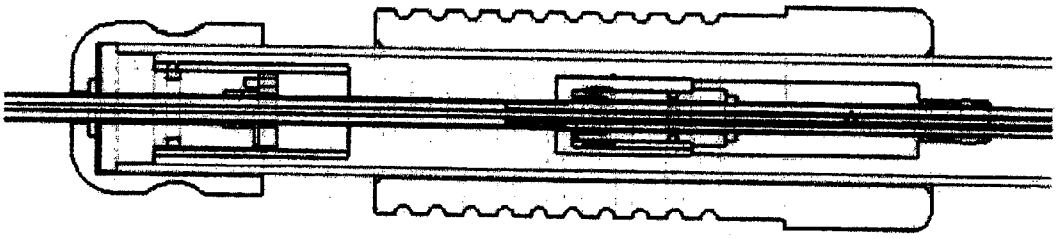

FIG. 101

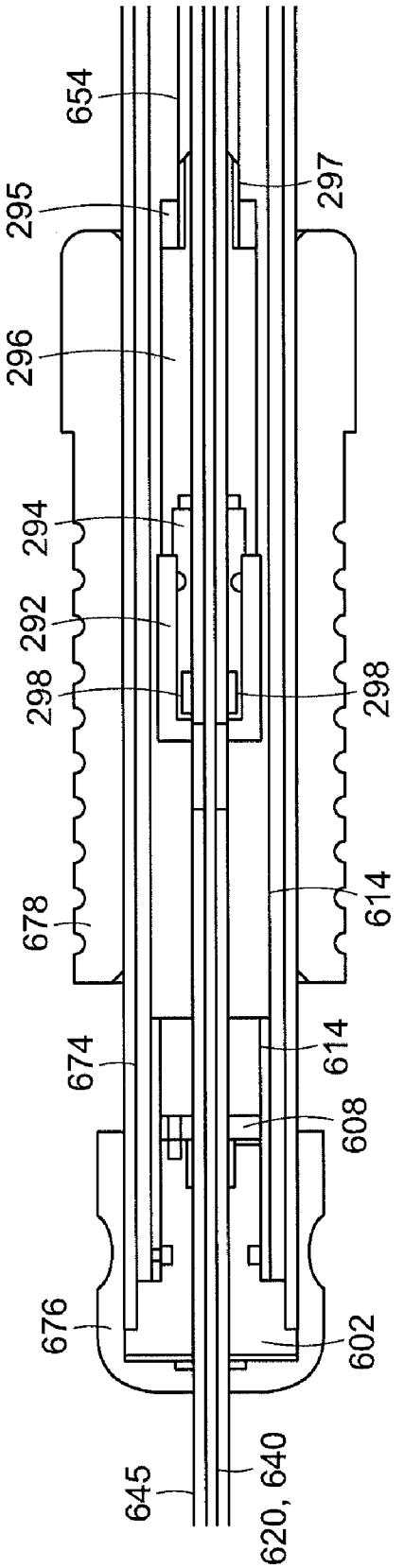
654
295
297
296
294
292
298
298
678
614
674
614
608
676
602
645
620, 640

FIG. 102

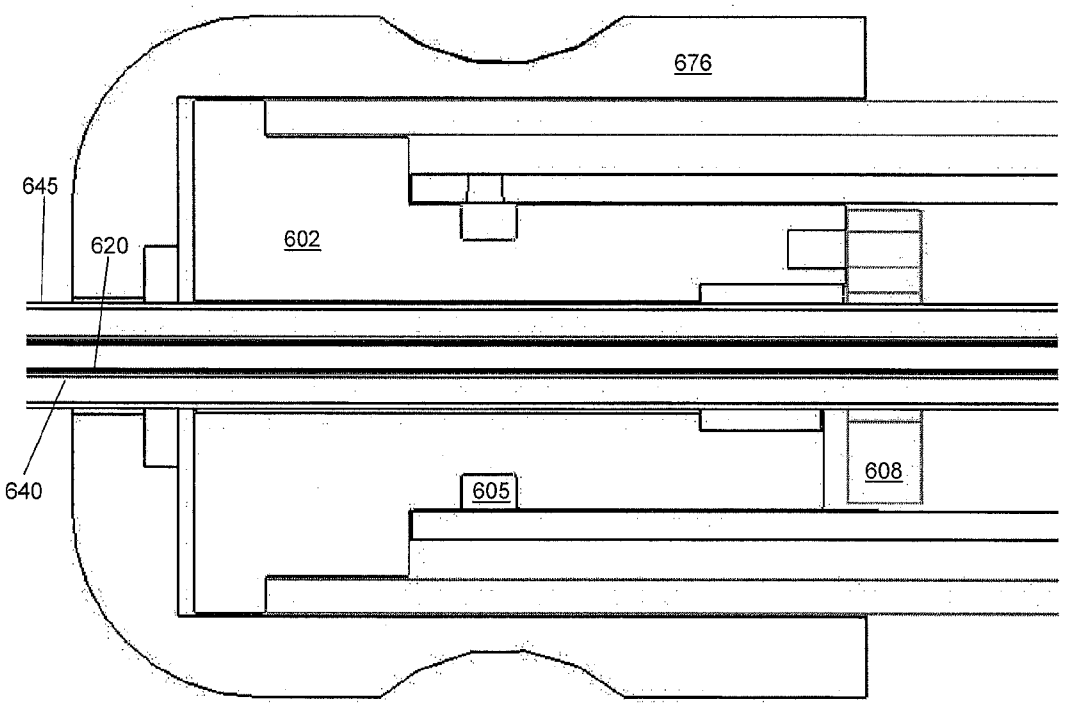

FIG. 103

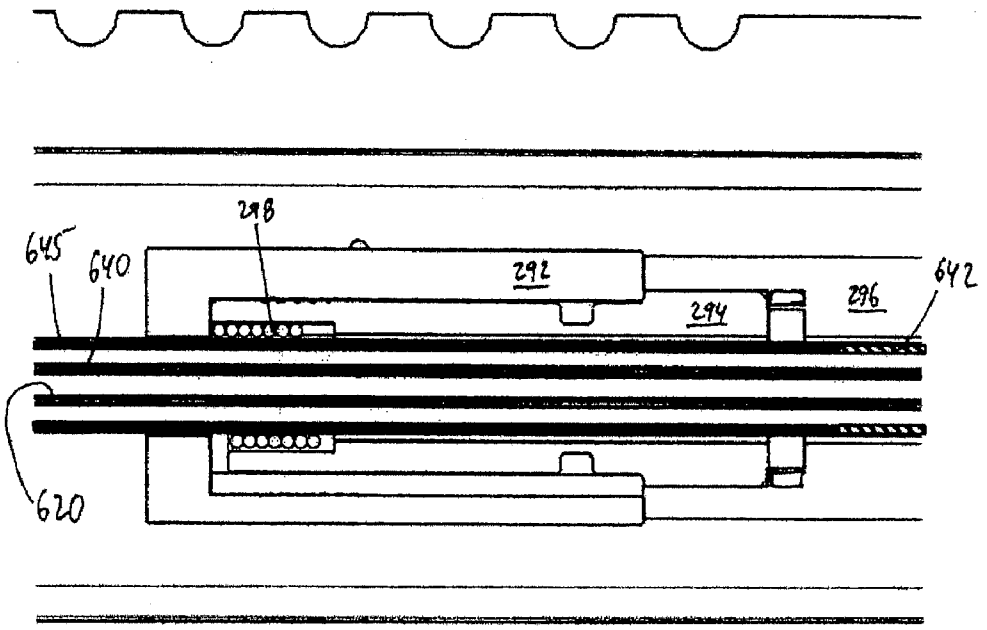

FIG. 104

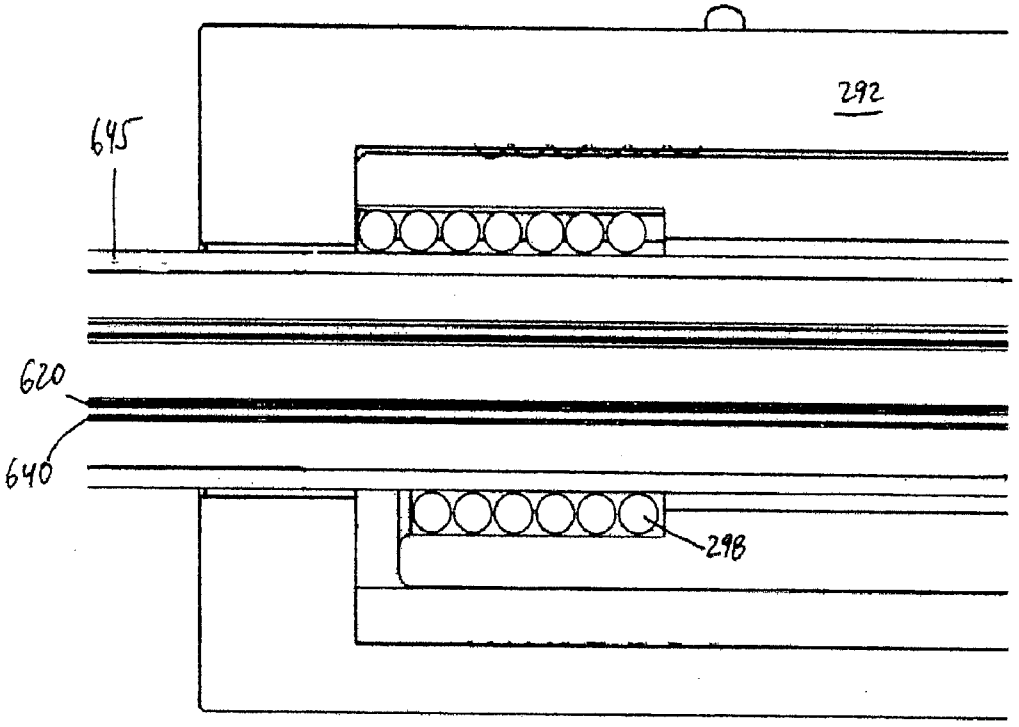

FIG. 105

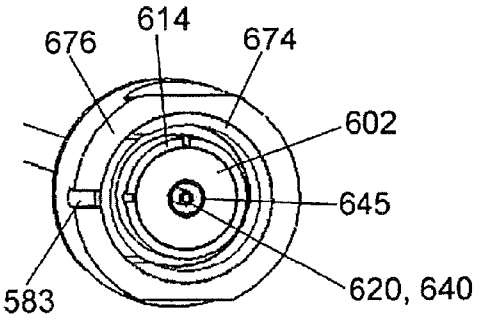

FIG. 106

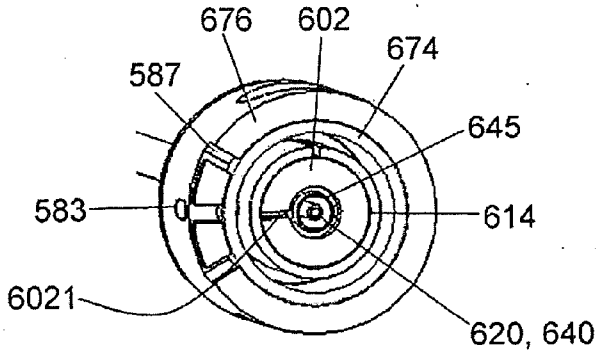

FIG. 107

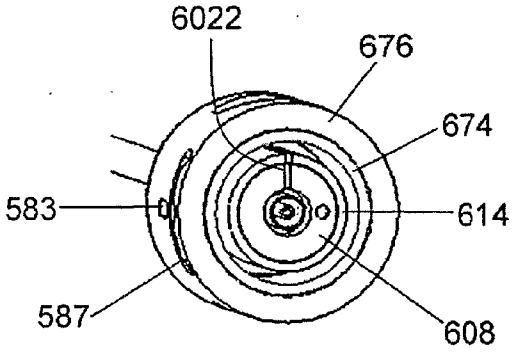

FIG. 108

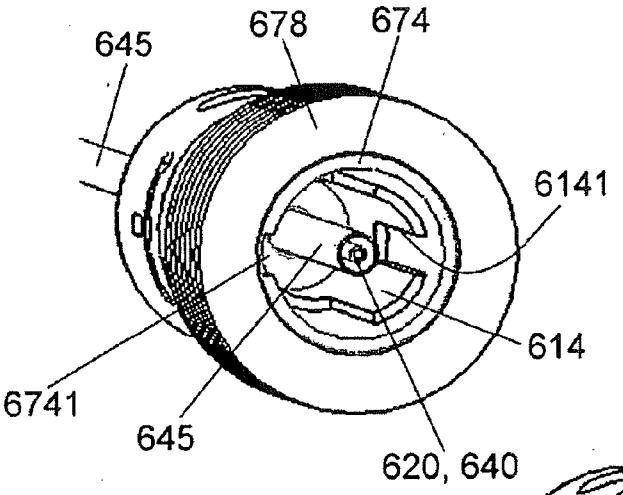

FIG. 109

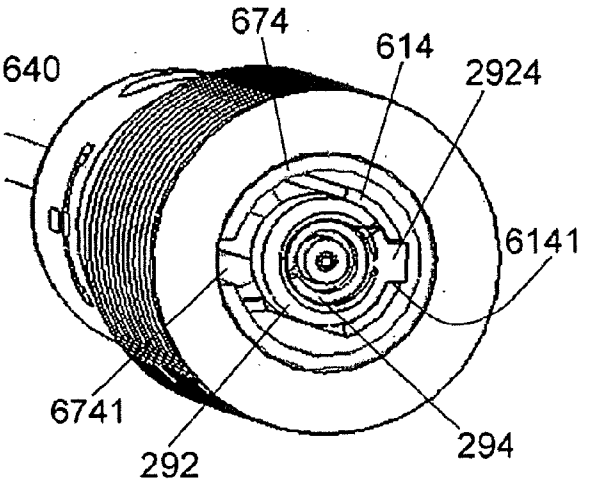

FIG. 110

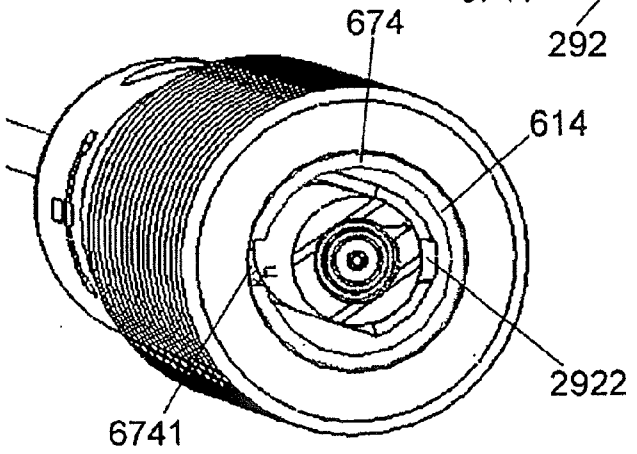

FIG. 112

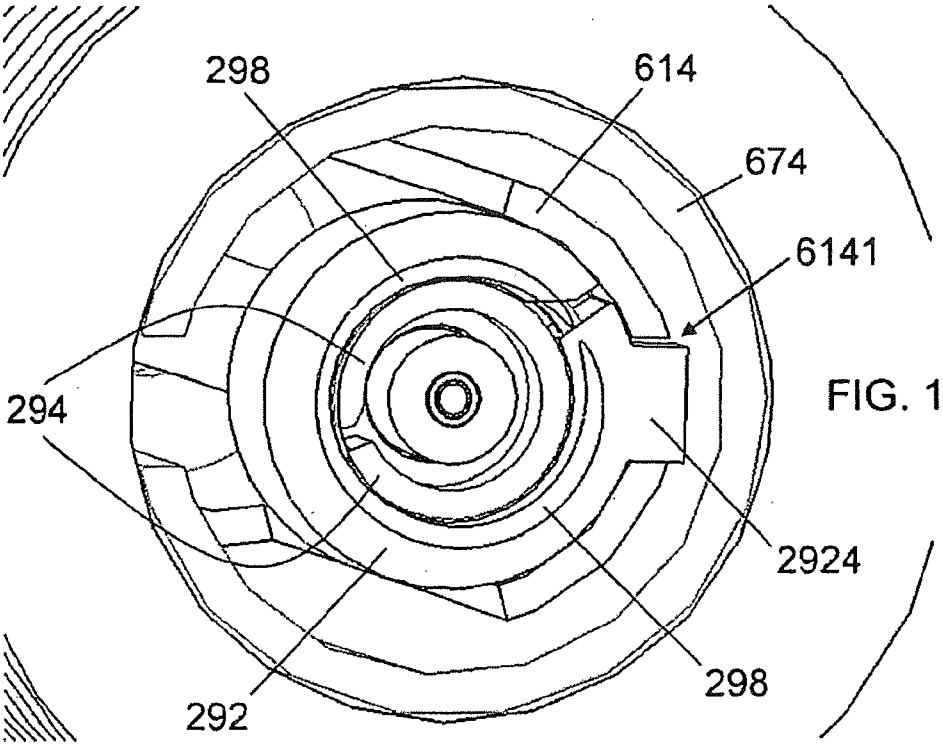

FIG. 111

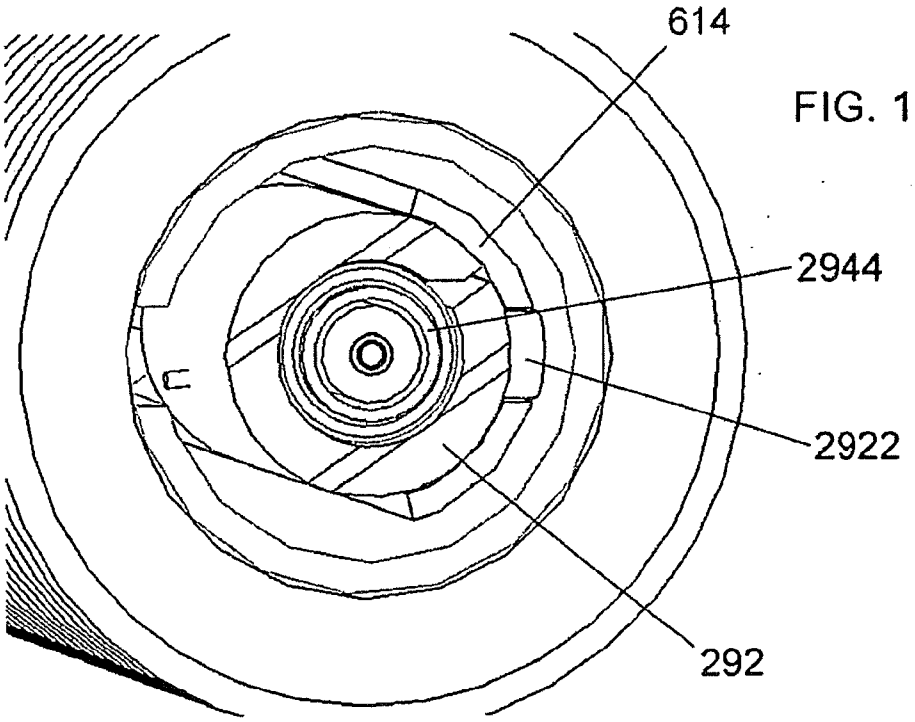

FIG. 113

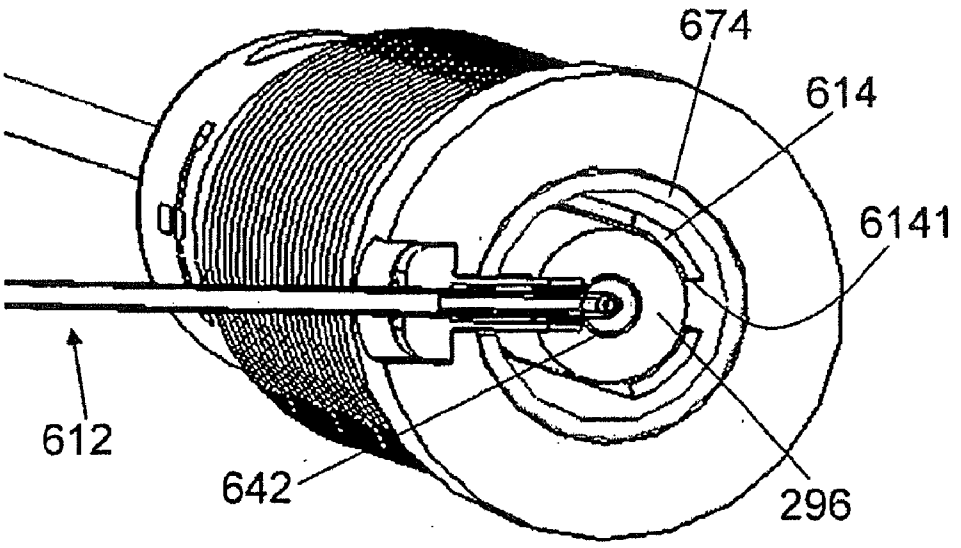

FIG. 114

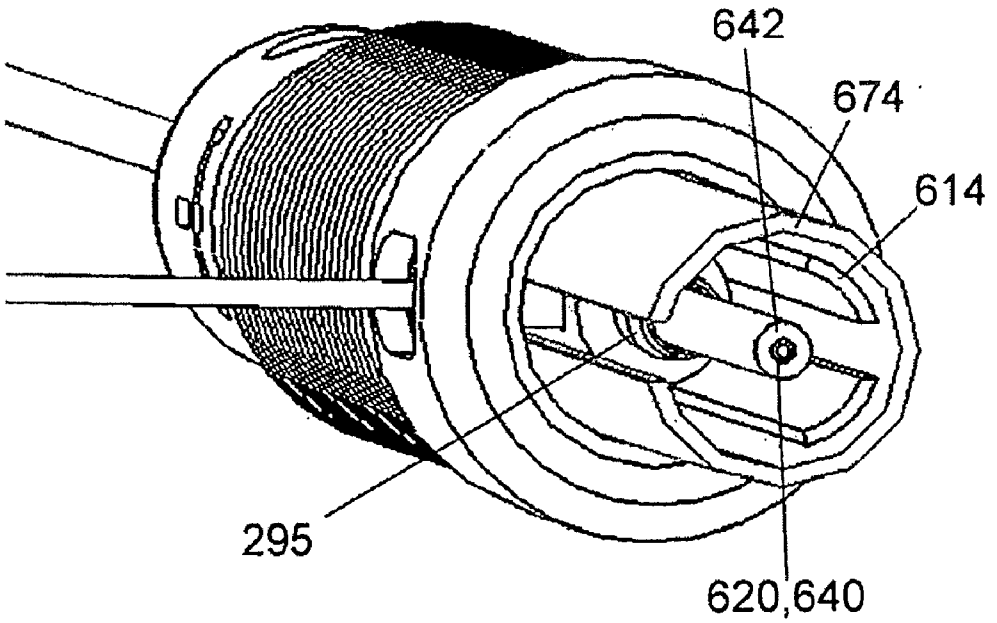

FIG. 115

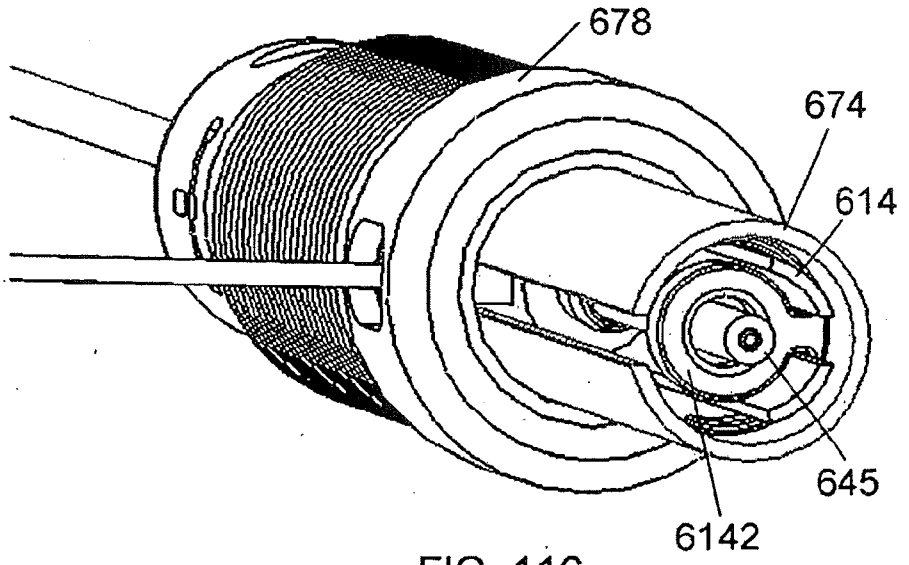

FIG. 116

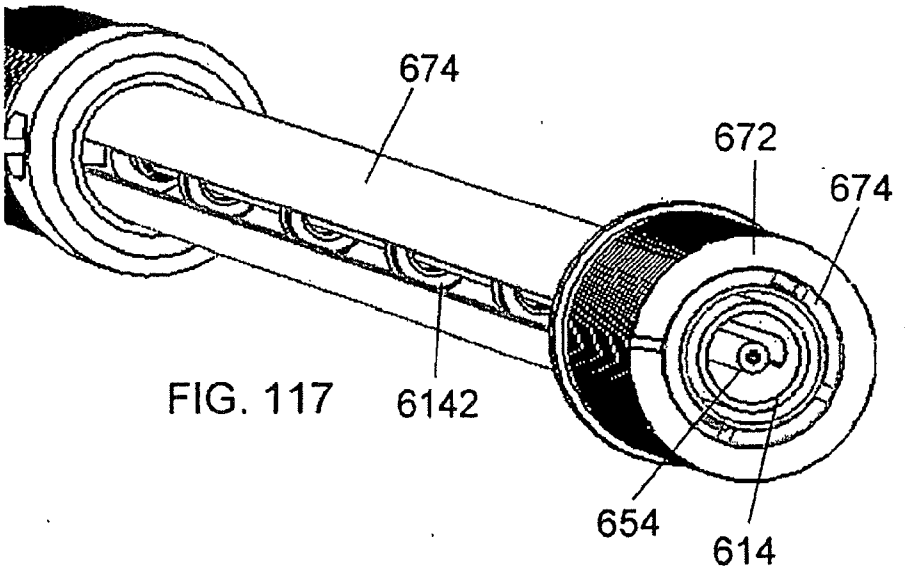

FIG. 117

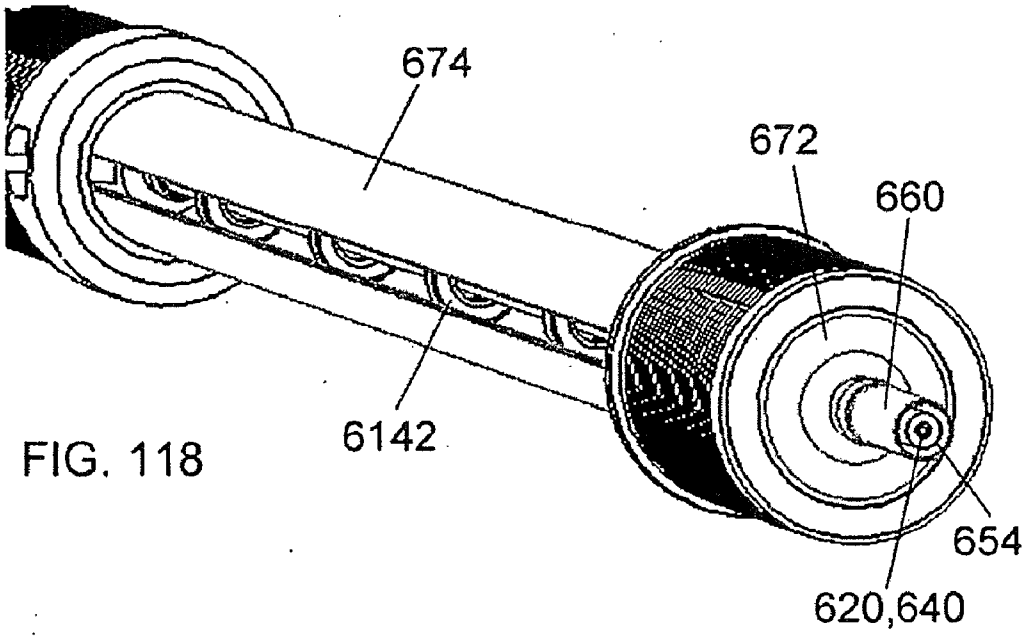

FIG. 118

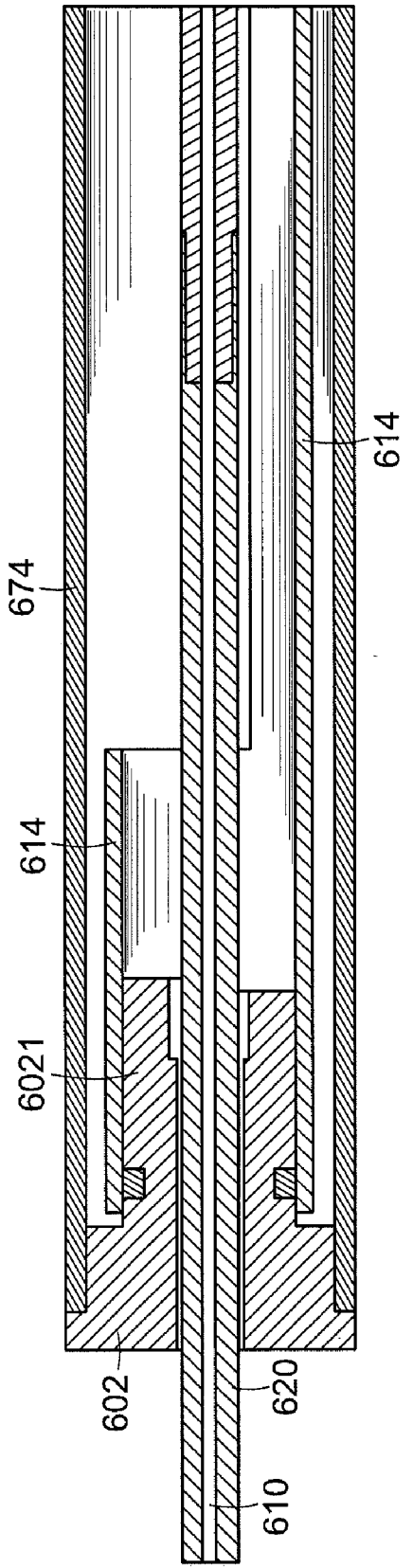

FIG. 119

FIG. 121

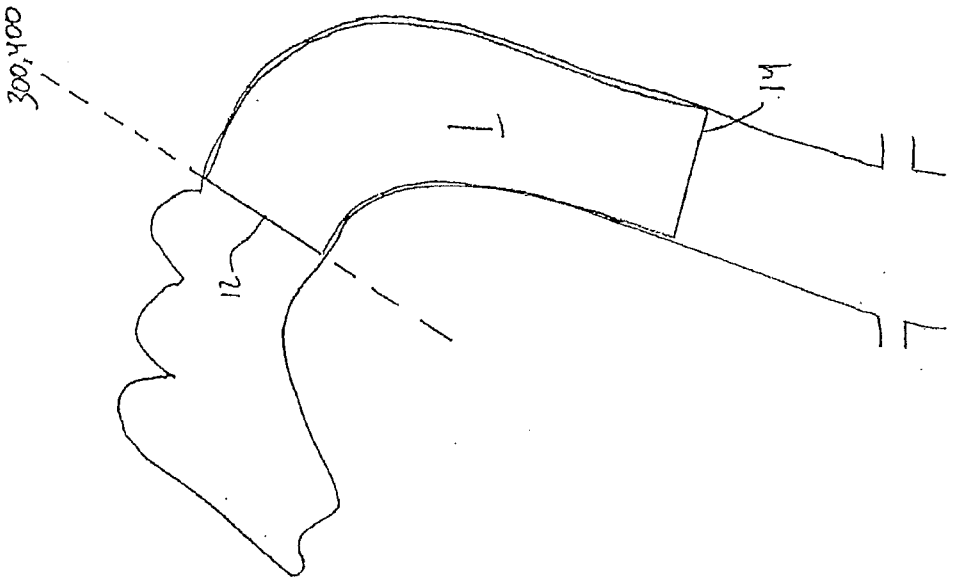

FIG. 120

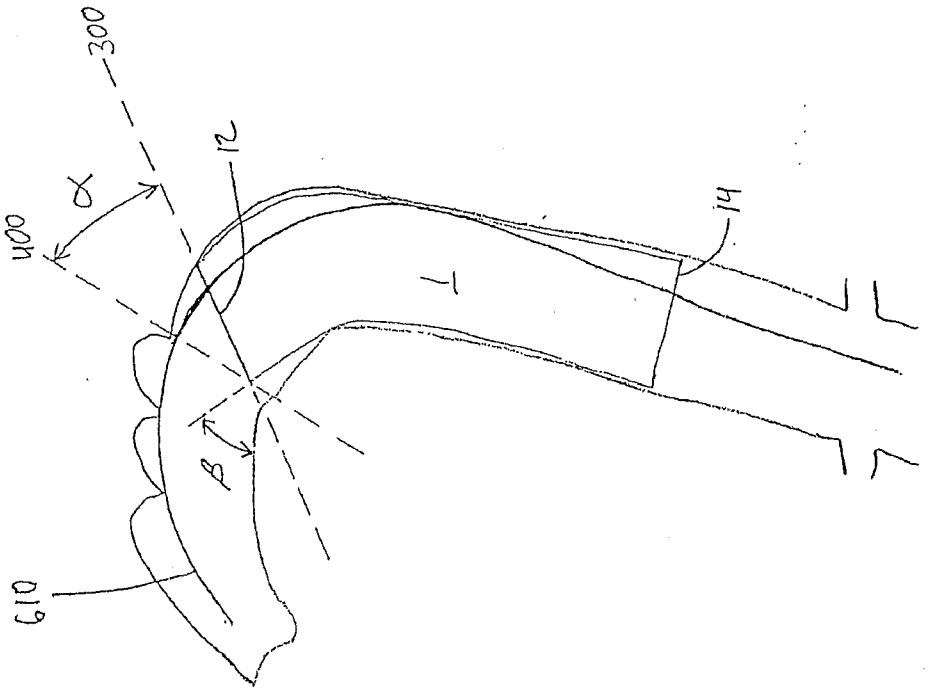

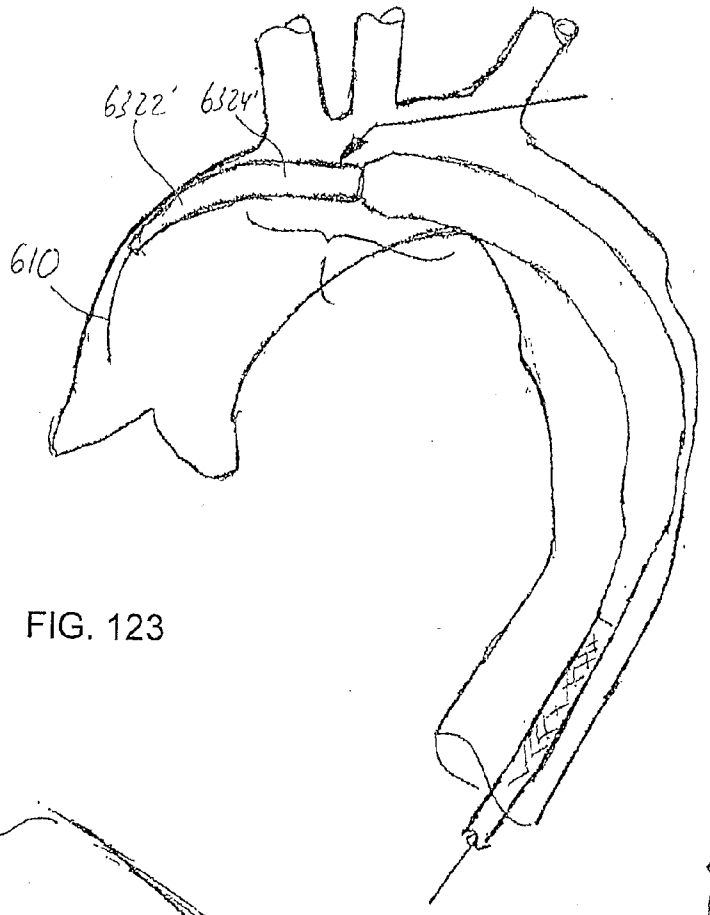

FIG. 123

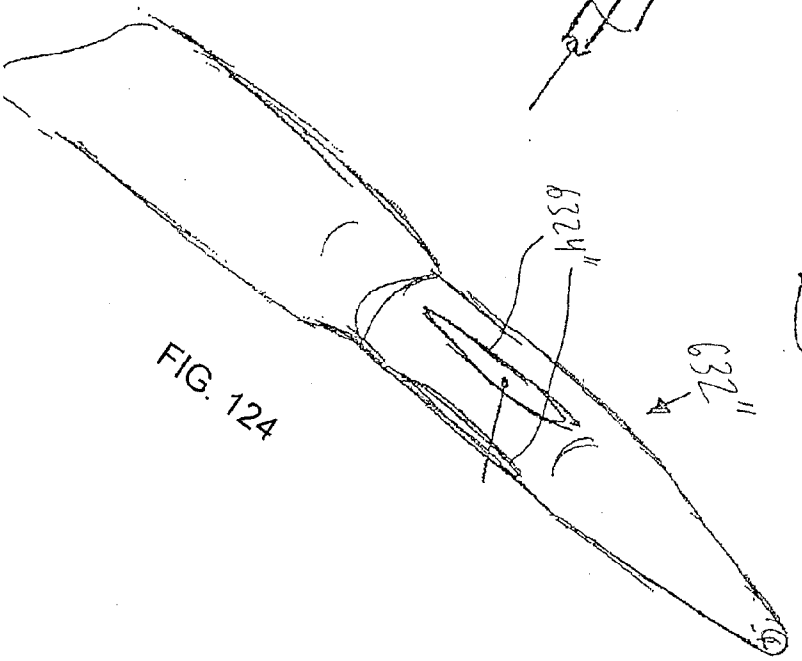

FIG. 124

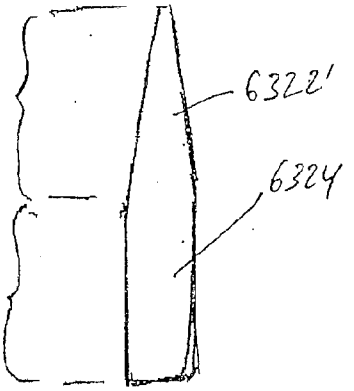

FIG. 122

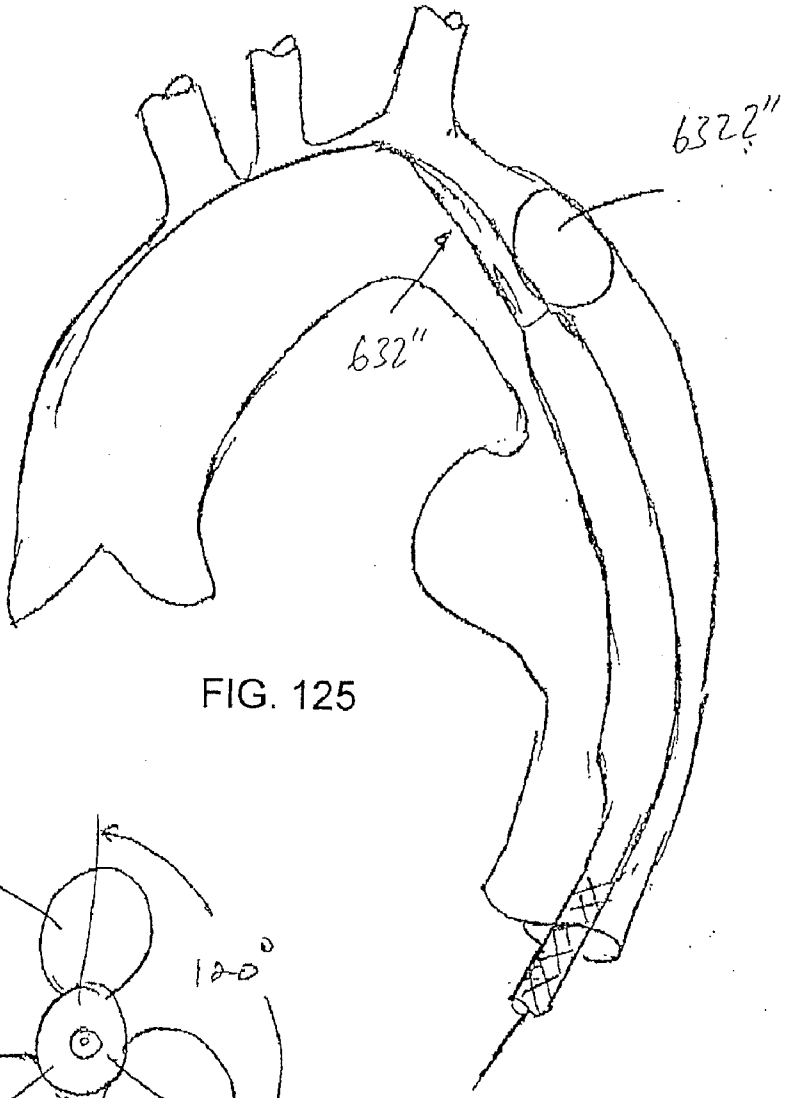

FIG. 125

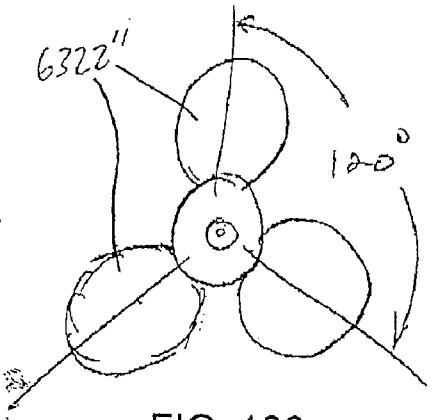

FIG. 126

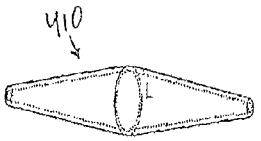

FIG. 127



FIG. 128

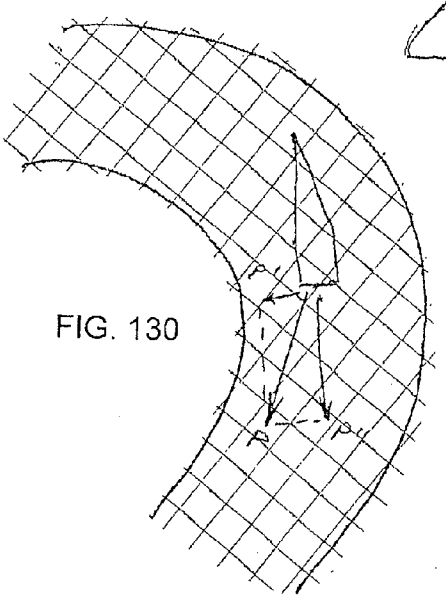

FIG. 130

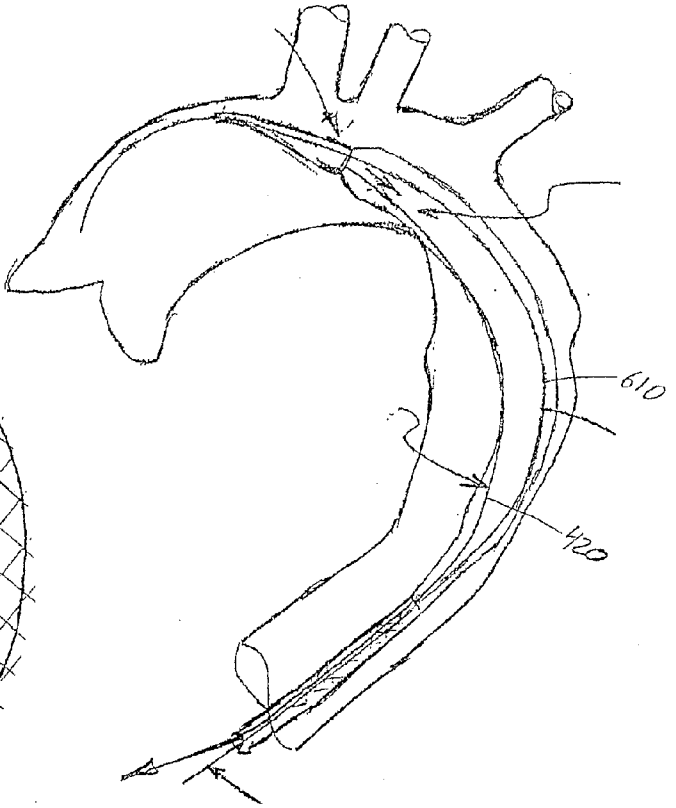

FIG. 129

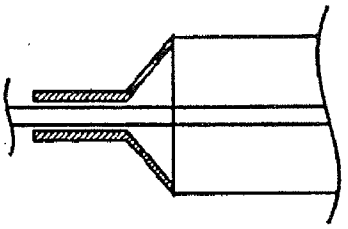

FIG. 131

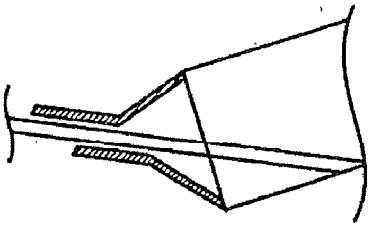

FIG. 132

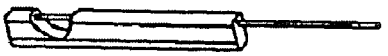

FIG. 133

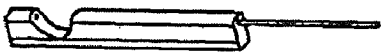

FIG. 134

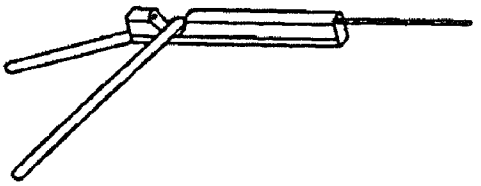

FIG. 135



FIG. 136

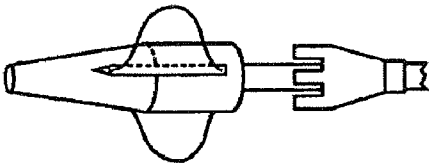

FIG. 137



FIG. 138



FIG. 140

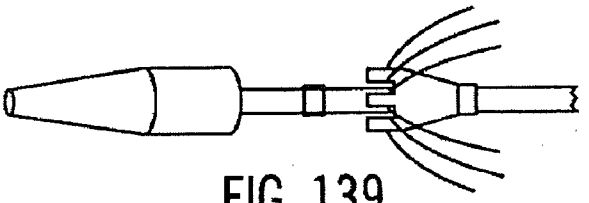

FIG. 139

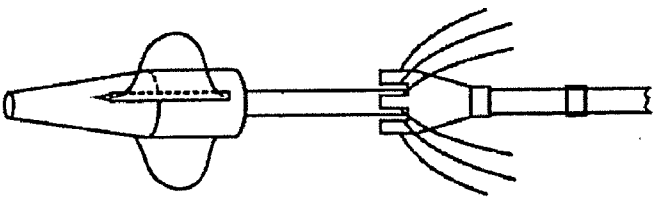

FIG. 141

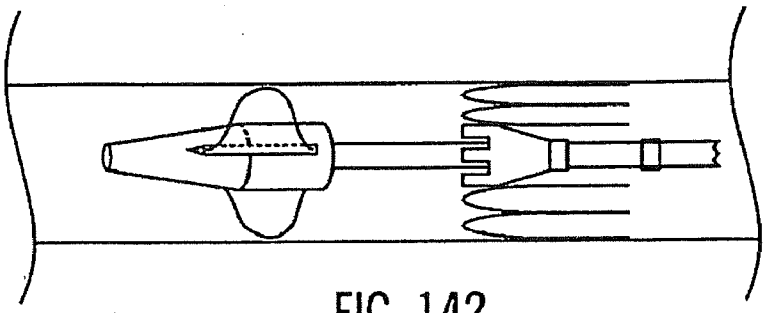

FIG. 142

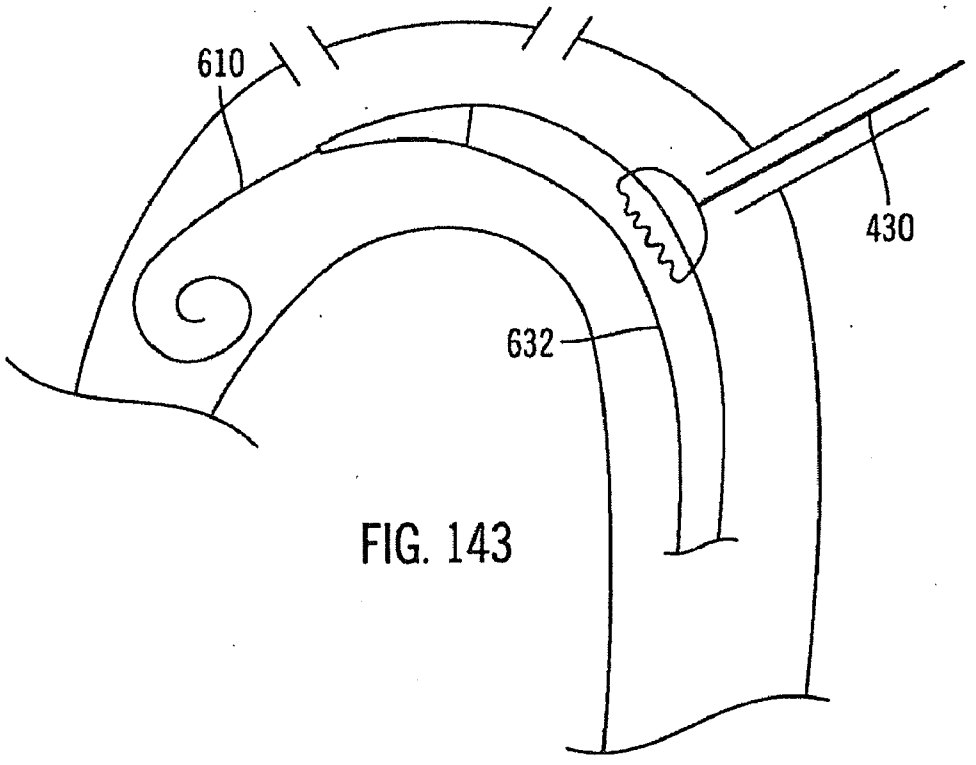

FIG. 143

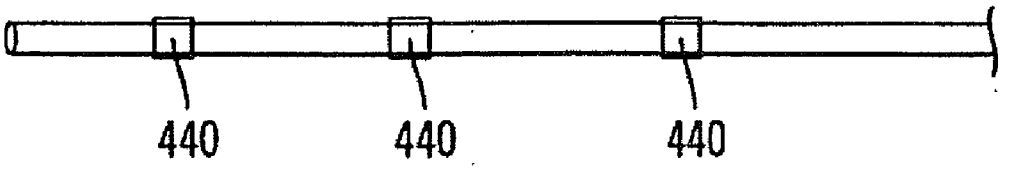

FIG. 144

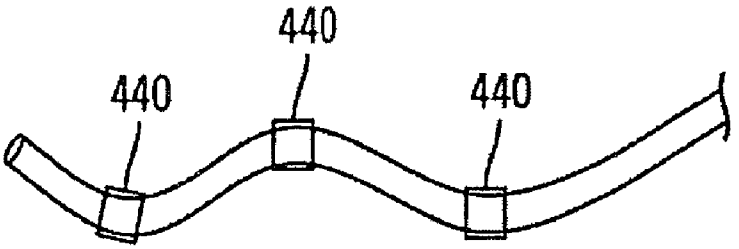

FIG. 145

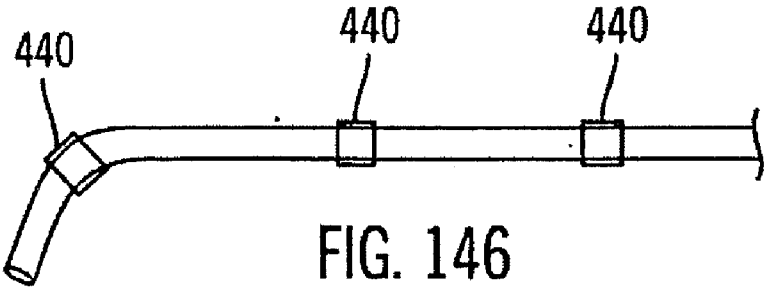

FIG. 146

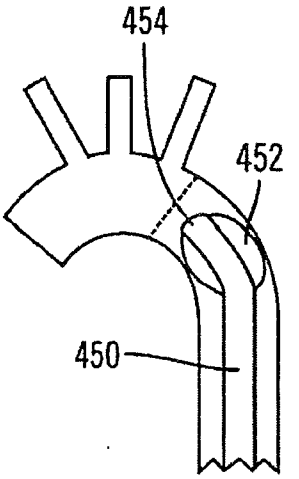

FIG. 147

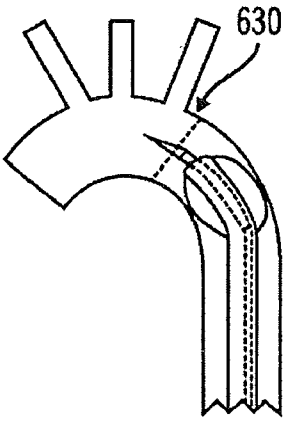

FIG. 148

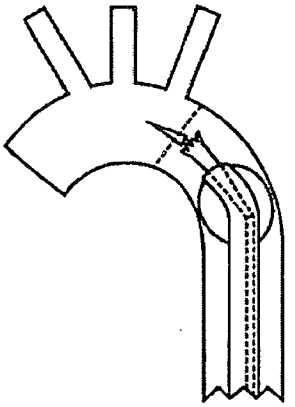

FIG. 149

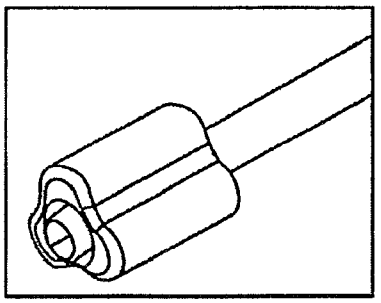

FIG. 150

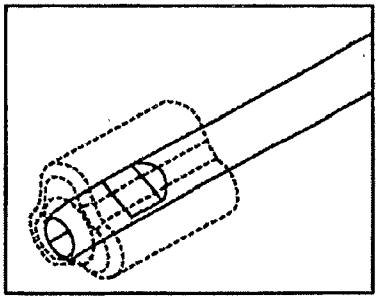

FIG. 150A

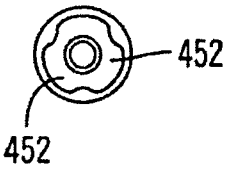

FIG. 151



FIG. 156

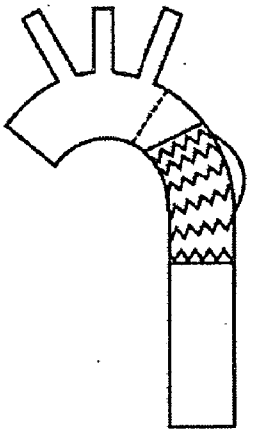

FIG. 157

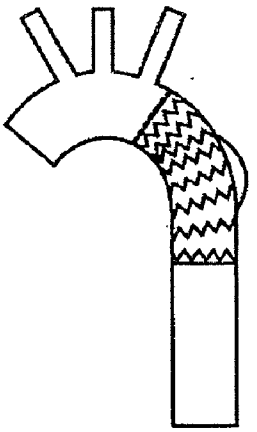

FIG. 158

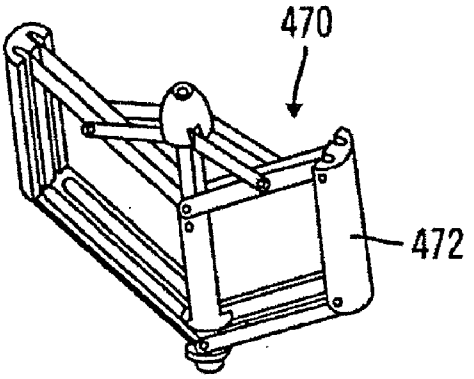

FIG. 159

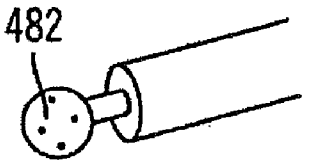

FIG. 161

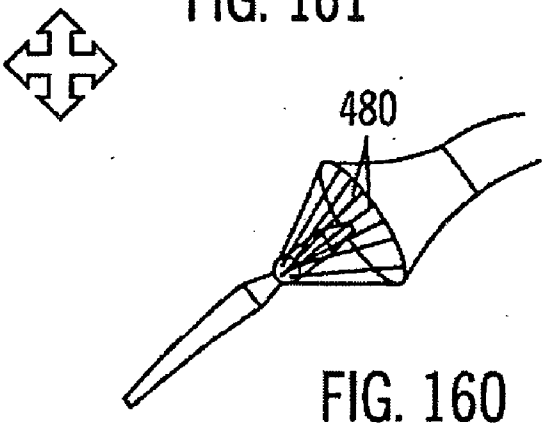

FIG. 160

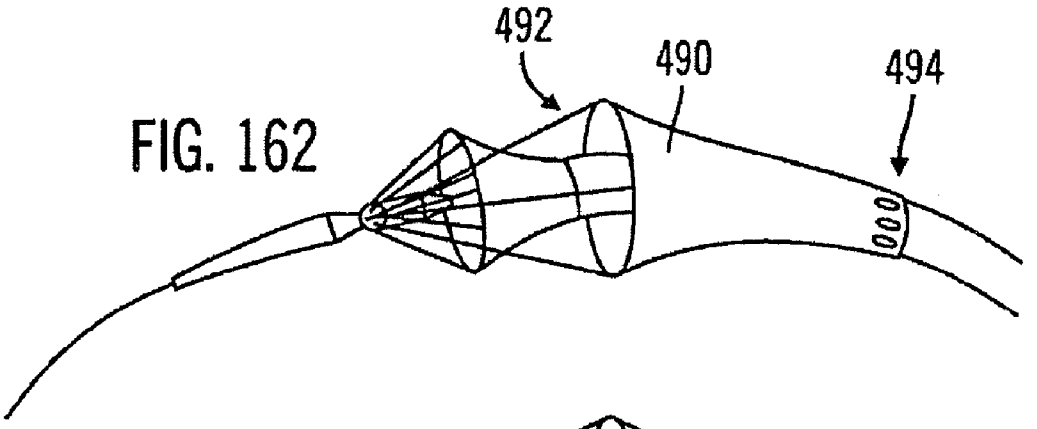

FIG. 162

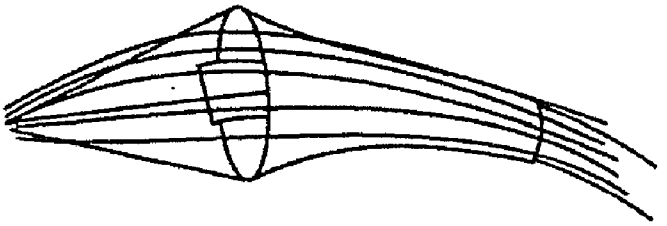

FIG. 163

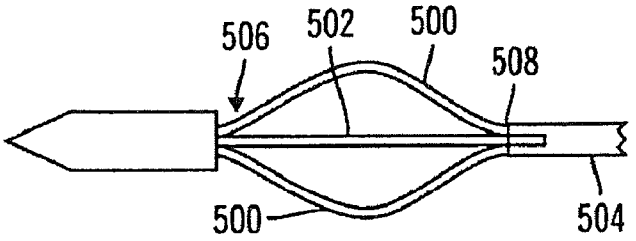

FIG. 164

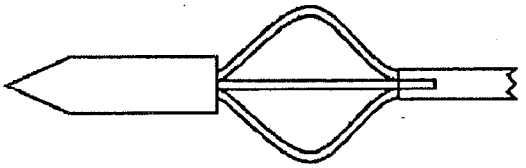

FIG. 165



FIG. 166

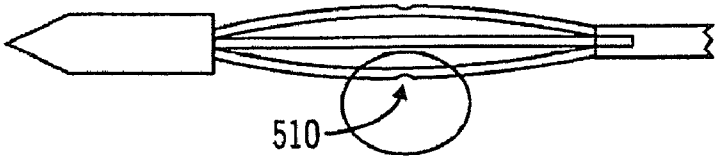

FIG. 167

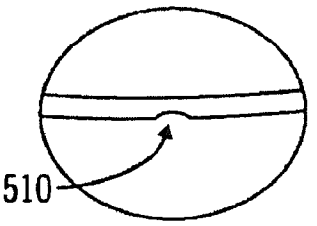

FIG. 167A

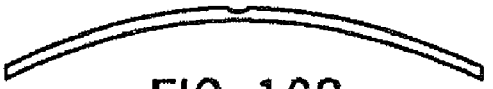

FIG. 168

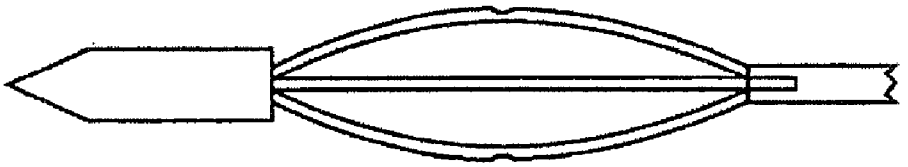

FIG. 169

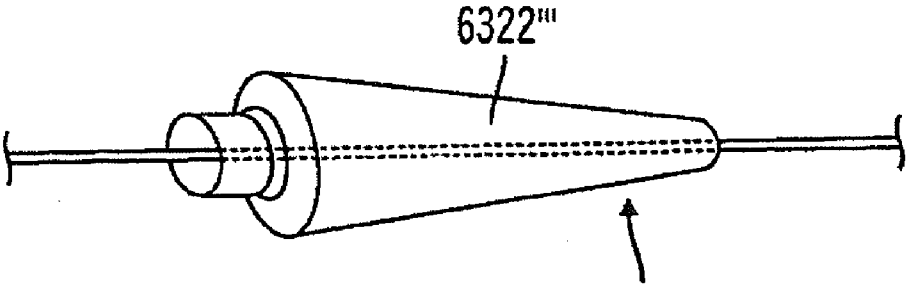

FIG. 170

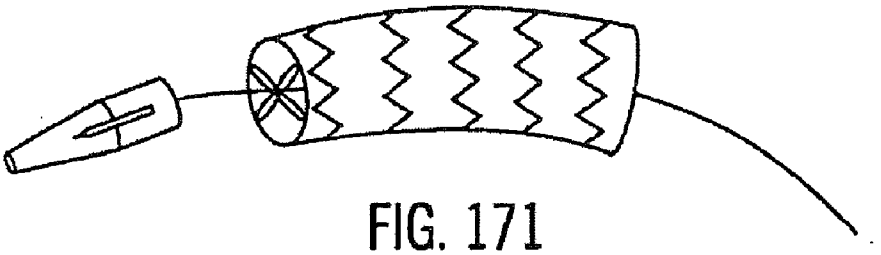

FIG. 171

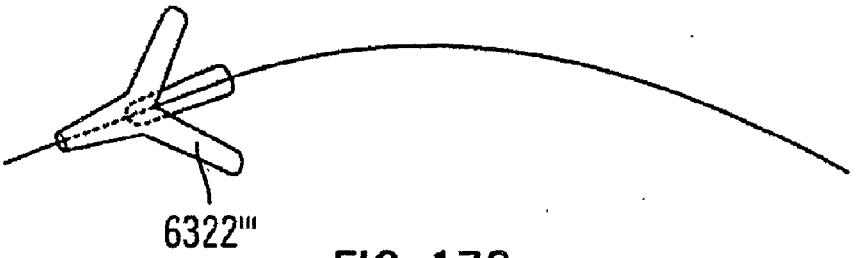

FIG. 172

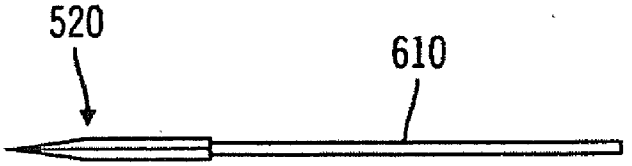

FIG. 173

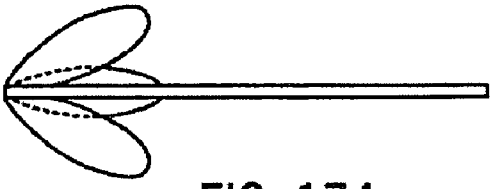

FIG. 174

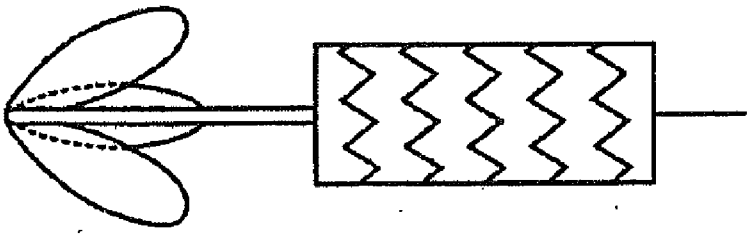

FIG. 175

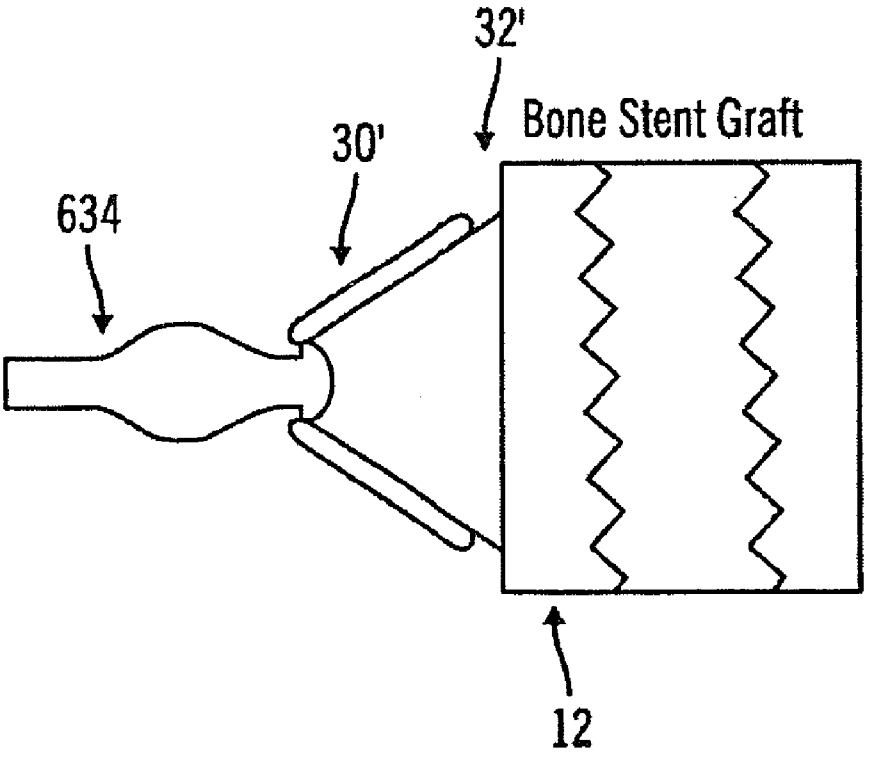

FIG. 176

DELIVERY SYSTEM AND METHOD FOR SELF-CENTERING A PROXIMAL END OF A STENT GRAFT

CROSS-REFERENCE TO RELATED APPLICATIONS

[0001] This application is a continuation of U.S. patent application Ser. No. 11/701,876, filed Feb. 1, 2007, which claims the benefit under 35 U.S.C. §119(e) of U.S. Provisional Applications Nos. 60/851,282, filed Oct. 12, 2006, 60/833,533, filed Jul. 26, 2006, and 60/765,449, filed Feb. 3, 2006. U.S. application Ser. No. 11/701,876 is also a continuation-in-part of U.S. patent application Ser. Nos. 10/884,136, filed Jul. 2, 2004, which claims the benefit under 35 U.S.C. §119(e) of U.S. Provisional Applications Nos. 60/500,155, filed Sep. 4, 2003, and 60/499,652, filed Sep. 3, 2003; and is also a continuation-in-part of Ser. No. 10/784,462, filed Feb. 23, 2004, which also claims the benefit under 35 U.S.C. §119(e) of U.S. Provisional Applications Nos. 60/500,155, filed Sep. 4, 2003, and 60/499,652, filed Sep. 3, 2003. The entire teachings of the above applications are incorporated herein by reference.

STATEMENT REGARDING FEDERALLY SPONSORED RESEARCH OR DEVELOPMENT

[0002] n/a

BACKGROUND OF THE INVENTION

[0003] 1. Field of the Invention

[0004] The invention lies in the field of endoluminal blood vessel repairs. The invention specifically relates to a delivery system and method for self-centering a proximal end of a stent graft, for example, for endoluminally repairing aneurysm and/or dissections of the thoracic transverse aortic arch, thoracic posterior aortic arch, and the descending thoracic portion of the aorta. The present invention lies in the field of prosthesis delivery systems, in particular, to a stent capture device for releasably holding a stent graft in an endovascular stent graft delivery system.

[0005] 2. Description of the Related Art

[0006] A stent graft is an implantable device made of a tube-shaped surgical graft covering and an expanding or self-expanding frame. The stent graft is placed inside a blood vessel to bridge, for example, an aneurismal, dissected, or other diseased segment of the blood vessel, and, thereby, exclude the hemodynamic pressures of blood flow from the diseased segment of the blood vessel.

[0007] In selected patients, a stent graft advantageously eliminates the need to perform open thoracic or abdominal surgical procedures to treat diseases of the aorta and eliminates the need for total aortic reconstruction. Thus, the patient has less trauma and experiences a decrease in hospitalization and recovery times. The time needed to insert a stent graft is substantially less than the typical anesthesia time required for open aortic bypass surgical repair, for example.

[0008] Use of surgical and/or endovascular grafts have widespread use throughout the world in vascular surgery. There are many different kinds of vascular graft configurations. Some have supporting framework over their entirety, some have only two stents as a supporting framework, and others simply have the tube-shaped graft material with no additional supporting framework, an example that is not relevant to the present invention.

[0009] One of the most commonly known supporting stent graft frameworks is that disclosed in U.S. Pat. Nos. 5,282,824 and 5,507,771 to Gianturco (hereinafter collectively referred to as "Gianturco"). Gianturco describes a zig-zag-shaped, self-expanding stent commonly referred to as a z-stent. The stents are, preferably, made of nitinol, but also have been made from stainless steel and other biocompatible materials.

[0010] There are various features characterizing a stent graft. The first significant feature is the tube of graft material. This tube is commonly referred to as the graft and forms the tubular shape that will, ultimately, take the place the diseased portion of the blood vessel. The graft is, preferably, made of a woven sheet (tube) of polyester or PTFE. The circumference of the graft tube is, typically, at least as large as the diameter and/or circumference of the vessel into which the graft will be inserted so that there is no possibility of blood flowing around the graft (also referred to as endoleak) to either displace the graft or to reapply hemodynamic pressure against the diseased portion of the blood vessel. Accordingly, to so hold the graft, self-expanding frameworks are attached typically to the graft material, whether on the interior or exterior thereof. Because blood flow within the lumen of the graft could be impaired if the framework was disposed on the interior wall of the graft, the framework is connected typically to the exterior wall of the graft. The ridges formed by such an exterior framework help to provide a better fit in the vessel by providing a sufficiently uneven outer surface that naturally grips the vessel where it contacts the vessel wall and also provides areas around which the vessel wall can endothelialize to further secure the stent graft in place.

[0011] One of the significant dangers in endovascular graft technology is the possibility of the graft migrating from the desired position in which it is installed. Therefore, various devices have been created to assist in anchoring the graft to the vessel wall.

[0012] One type of prior art prosthetic device is a stent graft made of a self-expanding metallic framework. For delivery, the stent graft is, first, radially compressed and loaded into an introducer system that will deliver the device to the target area. When the introducer system holding the stent graft positioned in an appropriate location in the vessel and allowed to open, the radial force imparted by the self-expanding framework is helpful, but, sometimes, not entirely sufficient, in endoluminally securing the stent graft within the vessel.

[0013] U.S. Pat. No. 5,824,041 to Lenker et al. (hereinafter "Lenker") discloses an example of a stent graft delivery system. Lenker discloses various embodiments in which a sheath is retractable proximally over a prosthesis to be released. With regard to FIGS. 7 and 8, Lenker names components 72 and 76, respectively, as "sheath" and "prosthesis-containment sheath." However, the latter is merely the catheter in which the prosthesis 74 and the sheath **72** are held. With regard to FIGS. 9 and 10, the sheath 82 has inner and outer layers 91, 92 fluid-tightly connected to one another to form a ballooning structure around the prosthesis P. This ballooning structure inflates when liquid is inflated with a non-compressible fluid medium and flares radially outward when inflated. With regard to FIGS. 13 to 15, Lenker discloses the "sheath" 120, which is merely the delivery catheter, and an eversible membrane 126 that "folds back over itself (everts) as the sheath 120 is retracted so that there are always two layers of the membrane between the distal end of the sheath [120] and the prosthesis P." Lenker at col. 9, lines 63 to 66. The eversion

(peeling back) is caused by direct connection of the distal end 130 to the sheath 120. The Lenker delivery system shown in FIGS. 19A to 19D holds the prosthesis P at both ends 256, 258 while an outer catheter 254 is retracted over the prosthesis P and the inner sheath 260. The inner sheath 260 remains inside the outer catheter 254 before, during, and after retraction. Another structure for holding the prosthesis P at both ends is illustrated in FIGS. 23A and 23B. Therein, the proximal holder having resilient axial members 342 is connected to a proximal ring structure 346. FIGS. 24A to 24C also show an embodiment for holding the prosthesis at both ends inside thin-walled tube 362.

[0014] To augment radial forces of stents, some prior art devices have added proximal and/or distal stents that are not entirely covered by the graft material. By not covering with graft material a portion of the proximal/distal ends of the stent, these stents have the ability to expand further radially than those stents that are entirely covered by the graft material. By expanding further, the proximal/distal stent ends better secure to the interior wall of the vessel and, in doing so, press the extreme cross-sectional surface of the graft ends into the vessel wall to create a fixated blood-tight seal.

[0015] One example of such a prior art exposed stent can be found in United States Patent Publication US 2002/0198587 to Greenberg et al. The modular stent graft assembly therein has a three-part stent graft: a two-part graft having an aortic section 12 and an iliac section 14 (with four sizes for each) and a contralateral iliac occluder 80. FIGS. 1, 2, and 4 to 6 show the attachment stent 32. As illustrated in FIGS. 1, 2, and 4, the attachment stent **32**, while rounded, is relatively sharp and, therefore, increases the probability of puncturing the vessel.

[0016] A second example of a prior art exposed stent can be found in U.S. Patent Publication 2003/0074049 to Hoganson et al. (hereinafter "Hoganson"), which discloses a covered stent 10 in which the elongated portions or sections 24 of the ends 20a and 20b extend beyond the marginal edges of the cover 22. See Hoganson at FIGS. 1, 3, 9, 11a, 11b, 12a, 12b, and 13. However, these extending exposed edges are triangular, with sharp apices pointing both upstream and downstream with regard to a graft placement location. Such a configuration of the exposed stent 20a, 20b increases the possibility of puncturing the vessel. In various embodiments shown in FIGS. 6a, 6b, 6c, 10, 14a, Hoganson teaches completely covering the extended stent and, therefore, the absence of a stent extending from the cover 22. It is noted that the Hoganson stent is implanted by inflation of a balloon catheter.

[0017] Another example of a prior art exposed stent can be found in U.S. Pat. No. 6,565,596 to White et al. (hereinafter "White I"), which uses a proximally extending stent to prevent twisting or kinking and to maintain graft against longitudinal movement. The extending stent is expanded by a balloon and has a sinusoidal amplitude greater than the next adjacent one or two sinusoidal wires. White I indicates that it is desirable to space wires adjacent upstream end of graft as close together as is possible. The stent wires of White I are actually woven into graft body by piercing the graft body at various locations. See White I at FIGS. 6 and 7. Thus, the rips in the graft body can lead to the possibility of the exposed stent moving with respect to the graft and of the graft body ripping further. Between the portions of the extending stent 17, the graft body has apertures.

[0018] The stent configuration of U.S. Pat. No. 5,716,393 to Lindenberg et al. is similar to White I in that the outermost portion of the one-piece stent—made from a sheet that is cut/punched and then rolled into cylinder—has a front end with a greater amplitude than the remaining body of the stent.

[0019] A further example of a prior art exposed stent can be found in U.S. Pat. No. 6,524,335 to Hartley et al. (hereinafter "Hartley"). FIGS. 1 and 2 of Hartley particularly disclose a proximal first stent 1 extending proximally from graft proximal end 4 with both the proximal and distal apices narrowing to pointed ends.

[0020] Yet another example of a prior art exposed stent can be found in U.S. Pat. No. 6,355,056 to Pinheiro (hereinafter "Pinheiro 1"). Like the Hartley exposed stent, Pinheiro discloses exposed stents having triangular, sharp proximal apices.

[0021] Still a further example of a prior art exposed stent can be found in U.S. Pat. No. 6,099,558 to White et al. (hereinafter "White II"). The White II exposed stent is similar to the exposed stent of White I and also uses a balloon to expand the stent.

[0022] An added example of a prior art exposed stent can be found in U.S. Pat. No. 5,871,536 to Lazarus, which discloses two support members 68 longitudinally extending from proximal end to a rounded point. Such points, however, create a very significant possibility of piercing the vessel.

[0023] An additional example of a prior art exposed stent can be found in U.S. Pat. No. 5,851,228 to Pinheiro (hereinafter "Pinheiro II"). The Pinheiro II exposed stents are similar to the exposed stents of Pinheiro I and, as such, have triangular, sharp, proximal apices.

[0024] Still another example of a prior art exposed stent can be found in Lenker (U.S. Pat. No. 5,824,041), which shows a squared-off end of the proximal and distal exposed band members 14. A portion of the exposed members 14 that is attached to the graft material 18, 20 is longitudinally larger than a portion of the exposed members 14 that is exposed and extends away from the graft material 18, 20. Lenker et al. does not describe the members 14 in any detail.

[0025] Yet a further example of a prior art exposed stent can be found in U.S. Pat. No. 5,824,036 to Lauterjung, which, of all of the prior art embodiments described herein, shows the most pointed of exposed stents. Specifically, the proximal ends of the exposed stent are apices pointed like a minaret. The minaret points are so shaped intentionally to allow forks 300 (see Lauterjung at FIG. 5) external to the stent 154 to pull the stent 154 from the sheath 302, as opposed to being pushed.

[0026] A final example of a prior art exposed stent can be found in U.S. Pat. No. 5,755,778 to Kleshinski. The Kleshinski exposed stents each have two different shaped portions, a triangular base portion and a looped end portion. The totality of each exposed cycle resembles a castellation. Even though the end-most portion of the stent is curved, because it is relatively narrow, it still creates the possibility of piercing the vessel wall.

[0027] All of these prior art stents suffer from the disadvantageous characteristic that the relatively sharp proximal apices of the exposed stents have a shape that is likely to puncture the vessel wall.

[0028] Devices other than exposed stents have been used to inhibit graft migration. A second of such devices is the placement of a relatively stiff longitudinal support member longitudinally extending along the entirety of the graft.

[0029] The typical stent graft has a tubular body and a circumferential framework. This framework is not usually continuous. Rather, it typically takes the form of a series of

rings along the tubular graft. Some stent grafts have only one or two of such rings at the proximal and/or distal ends and some have many stents tandemly placed along the entirety of the graft material. Thus, the overall stent graft has an "accordion" shape. During the systolic phase of each cardiac cycle, the hemodynamic pressure within the vessel is substantially parallel with the longitudinal plane of the stent graft. Therefore, a device having unsecured stents, could behave like an accordion, or concertina with each systolic pulsation, and may have a tendency to migrate downstream. (A downstream migration, to achieve forward motion, has a repetitive longitudinal compression and extension of its cylindrical body.) Such movement is entirely undesirable. Connecting the stents with support along the longitudinal extent of the device thereof can prevent such movement. To provide such support, a second anti-migration device can be embodied as a relatively stiff longitudinal bar connected to the framework.

[0030] A clear example of a longitudinal support bar can be found in Pinheiro I (U.S. Pat. No. 6,355,056) and Pinheiro II (U.S. Pat. No. 5,851,228). Each of these references discloses a plurality of longitudinally extending struts 40 extending between and directly interconnecting the proximal and distal exposed stents 20a, 20b. These struts 40 are designed to extend generally parallel with the inner lumen 15 of the graft 10, in other words, they are straight.

[0031] Another example of a longitudinal support bar can be found in U.S. Pat. No. 6,464,719 to Jayaraman. The Jayaraman stent is formed from a graft tube 21 and a supporting sheet 1 made of nitinol. This sheet is best shown in FIG. 3. The end pieces 11, 13 of the sheet are directly connected to one another by wavy longitudinal connecting pieces 15 formed by cutting the sheet 1. To form the stent graft, the sheet 1 is coiled with or around the cylindrical tube 21. See FIGS. 1 and 4. Alternatively, a plurality of connecting pieces 53 with holes at each end thereof can be attached to a cylindrical fabric tube 51 by stitching or sutures 57, as shown in FIG. 8. Jayaraman requires more than one of these serpentine shaped connecting pieces 53 to provide longitudinal support.

[0032] United States Patent Publication 2002/0016627 and U.S. Pat. No. 6,312,458 to Golds each disclose a variation of a coiled securing member 20.

[0033] A different kind of supporting member is disclosed in FIG. 8 of U.S. Pat. No. 6,053,943 to Edwin et al.

[0034] Like Jayararnan, U.S. Pat. No. 5,871,536 to Lazarus discloses a plurality of straight, longitudinal support structures 38 attached to the circumferential support structures 36, see FIGS. 1, 6, 7, 8, 10, 11, 12, 14. FIG. 8 of Lazarus illustrates the longitudinal support structures 38 attached to a distal structure 36 and extending almost all of the way to the proximal structure 36. The longitudinal structures 38, 84, 94 can be directly connected to the body 22, 80 and can be telescopic 38, 64.

[0035] United States Patent Publication 2003/0088305 to Van Schie et al. (hereinafter "Van Schie") does not disclose a support bar. Rather, it discloses a curved stent graft using an elastic material 8 connected to stents at a proximal end 2 and at a distal end 3 (see FIGS. 1, 2) thereof to create a curved stent graft. Because Van Schie needs to create a flexible curved graft, the elastic material 8 is made of silicone rubber or another similar material. Thus, the material 8 cannot provide support in the longitudinal extent of the stent graft. Accordingly, an alternative to the elastic support material 8 is a suture material 25 shown in FIGS. 3 to 6.

SUMMARY OF THE INVENTION

[0036] The invention provides a delivery system and method for self-centering a proximal end of a stent graft that overcome the hereinafore-mentioned disadvantages of the heretofore-known devices and methods of this general type and that provides a vessel repair device that implants/conforms more efficiently within the natural or diseased course of the aorta by aligning with the natural curve of the aorta, decreases the likelihood of vessel puncture, increases the blood-tight vascular connection, retains the intraluminal wall of the vessel position, is more resistant to migration, and delivers the stent graft into a curved vessel while minimizing intraluminal forces imparted during delivery and while minimizing the forces needed for a user to deliver the stent graft into a curved vessel.

[0037] With the foregoing and other objects in view, there is provided, in accordance with the invention, a method for implanting a prosthesis centrally within a curved lumen, including the steps of loading a prosthesis into a delivery sheath, the prosthesis having a proximal end and the sheath having a distal end, advancing the sheath in a patient towards the curved lumen to place at least the proximal end within the curved lumen, and centering the proximal end of the prosthesis and/or the distal end of the sheath within the curved lumen.

[0038] With the objects of the invention in view, there is also provided a method for centrally implanting a prosthesis, including the steps of placing at least a proximal end of a prosthesis in a curved lumen of a patient and centering the proximal end of the prosthesis within the curved lumen before implanting the prosthesis therein.

[0039] With the objects of the invention in view, there is also provided a method for implanting a prosthesis centrally within a curved lumen, including the steps of loading a prosthesis into a delivery sheath, the prosthesis having a proximal end and the sheath having a distal end, in a first advancing step, advancing the outer catheter containing the inner sheath together towards the curved lumen to a location proximal of the curved lumen, and, in a second advancing step, advancing the inner sheath containing the prosthesis into the curved lumen to place at least the proximal end within the curved lumen while the outer catheter substantially remains at the location, centering the proximal end of the prosthesis and/or the distal end of the sheath within the curved lumen, and, after carrying out the centering step, deploying the proximal end of the prosthesis centered within the curved lumen.

[0040] With the objects of the invention in view, there is also provided a method of implanting a prosthesis in a patient at a treatment site, including the steps of providing a prosthesis delivery system with a relatively flexible inner sheath and a relatively stiff outer sheath, loading a prosthesis inside the inner sheath, loading the inner sheath containing the prosthesis within the outer sheath, advancing the outer sheath in a patient towards the treatment site up to a given position at a distance from the treatment site. While the outer sheath is retained in the given position, the inner sheath is advanced out from the outer sheath to the treatment site to place at least a proximal end of inner sheath within the treatment site and the proximal end of the prosthesis and/or the distal end of the inner sheath is centered within the curved lumen. The inner sheath is retracted to at least partially implant the prosthesis at

the treatment site, and, upon completion of prosthesis implantation, both of the inner and outer sheaths are retracted out from the patient.

[0041] In accordance with another mode of the invention, after carrying out the centering step, the prosthesis is deployed centered within the curved lumen.

[0042] In accordance with a further mode of the invention, the proximal end of the prosthesis has an orifice defining an inflow plane and a proximal end implantation site of the lumen defines an implant plane, and the centering step is carried out by substantially aligning the inflow plane with the implant plane.

[0043] In accordance with an added mode of the invention, after carrying out the centering step, the prosthesis is deployed with the inflow plane substantially aligned with the implant plane.

[0044] In accordance with an additional mode of the invention, the centering step is carried out by centering at least the distal end of the sheath within the curved lumen with a sheath centering device.

[0045] In accordance with an additional mode of the invention, the loading step is carried out by partially collapsing the prosthesis to a size smaller than an interior of the sheath and inserting the partially collapsed prosthesis into the sheath and the deployment step is carried out by releasing the prosthesis centered within the curved lumen.

[0046] In accordance with yet a further mode of the invention, the sheath is provided as a relatively flexible inner sheath and the inner sheath is slidably disposed inside a relatively stiff outer catheter.

[0047] In accordance with yet an added mode of the invention, the advancing step is carried out by first advancing the outer catheter containing the inner sheath together towards the curved lumen to a location proximal of the curved lumen and subsequently advancing the inner sheath containing the prosthesis into the curved lumen while the outer catheter substantially remains at the location.

[0048] In accordance with yet an additional mode of the invention, the centering step is carried out within a curved portion of an aorta.

[0049] In accordance with again another mode of the invention, the prosthesis is provided with a tubular graft body defining an inflow plane and an exit plane and all portions of the stents on the graft body are disposed between the inflow plane and the exit plane.

[0050] In accordance with again a further mode of the invention, a guidewire is placed through an implantation site within the curved lumen, the advancing step is carried out by guiding the delivery sheath containing the prosthesis along the guidewire, and the centering step is carried out by moving the proximal end of the prosthesis and/or the distal end of the sheath in a direction away from the guidewire at the implantation site.

[0051] In accordance with again an added mode of the invention, a tip is provided and the centering of the proximal end of the prosthesis is carried out with the tip.

[0052] In accordance with again an additional mode of the invention, the tip is slidably disposed within the delivery sheath.

[0053] In accordance with still a further mode of the invention, the tip is operatively connected to the delivery sheath to perform the centering step with the tip and the sheath.

[0054] In accordance with still an added mode of the invention, a tip is slidably disposed within the delivery sheath to place the tip at the distal end of the sheath, a sheath centering device is connected to the tip through the sheath, and the centering step is carried out with the sheath centering device.

[0055] In accordance with still an additional mode of the invention, a tip is provided with a sheath centering device, the tip is slidably disposed within the delivery sheath to place the tip at the distal end of the sheath, and the centering step is carried out by expanding the sheath centering device out from the tip.

[0056] In accordance with another mode of the invention, a sheath centering device is provided at the proximal end of the sheath and the centering step is carried out with the sheath centering device.

[0057] In accordance with still another mode of the invention, the centering step is carried out with a sheath centering device physically separate from the sheath.

[0058] In accordance with yet another mode of the invention, before carrying out the centering step, a central axis of the sheath centering device is placed approximately orthogonal to a longitudinal axis of the sheath.

[0059] In accordance with an additional mode of the invention, the centering step is carried out with a sheath centering device surrounding an exterior of the sheath.

[0060] In accordance with again another mode of the invention, the centering step is carried out with a sheath centering device disposed between an exterior surface of the sheath and a wall of a lumen in which the sheath is present.

[0061] In accordance with a concomitant mode of the invention, the centering step is carried out with a sheath centering device disposed within the sheath.

[0062] Other features that are considered as characteristic for the invention are set forth in the appended claims.

[0063] Although the invention is illustrated and described herein as embodied in a delivery system and method for self-centering a proximal end of a stent graft, it is, nevertheless, not intended to be limited to the details shown because various modifications and structural changes may be made therein without departing from the spirit of the invention and within the scope and range of equivalents of the claims.

[0064] The construction and method of operation of the invention, however, together with additional objects and advantages thereof, will be best understood from the following description of specific embodiments when read in connection with the accompanying drawings.

BRIEF DESCRIPTION OF THE DRAWINGS

[0065] The features of the present invention, which are believed to be novel, are set forth with particularity in the appended claims. The invention, together with further objects and advantages thereof, may best be understood by reference to the following description, taken in conjunction with the accompanying drawings, in the several figures of which like reference numerals identify like elements, and in which:

[0066] FIG. **1** is a side elevational view of a stent graft according to the invention;

[0067] FIG. **2** is a side elevational view of a stent of the stent graft of FIG. **1**;

[0068] FIG. **3** is a cross-sectional view of the stent of FIG. **2** with different embodiments of protrusions;

[0069] FIG. **4** is a perspective view of a prior art round mandrel for forming prior art stents;

[0070] FIG. **5** is a fragmentary, side elevational view of a prior art stent in a portion of a vessel;

[0071] FIG. **6** is a perspective view of a dodecahedral-shaped mandrel for forming stents in FIGS. **1** to **3**;

[0072] FIG. **7** is a fragmentary, side elevational view of the stent of FIGS. **1** to **3** in a portion of a vessel;

[0073] FIG. **8** is a fragmentary, enlarged side elevational view of the proximal end of the stent graft of FIG. **1** illustrating movement of a gimbaled end;

[0074] FIG. **9** is a side elevational view of a two-part stent graft according to the invention;

[0075] FIG. **10** is a fragmentary, side elevational view of a delivery system according to the invention with a locking ring in a neutral position;

[0076] FIG. **11** is a fragmentary, side elevational view of the delivery system of FIG. **10** with the locking ring in an advancement position and, as indicated by dashed lines, a distal handle and sheath assembly in an advanced position;

[0077] FIG. **12** is a fragmentary, enlarged view of a sheath assembly of the delivery system of FIG. **10**;

[0078] FIG. **13** is a fragmentary, enlarged view of an apex capture device of the delivery system of FIG. **10** in a captured position;

[0079] FIG. **14** is a fragmentary, enlarged view of the apex capture device of FIG. **13** in a released position;

[0080] FIG. **15** is a fragmentary, enlarged view of an apex release assembly of the delivery system of FIG. **10** in the captured position;

[0081] FIG. **16** is a fragmentary, enlarged view of the apex release assembly of FIG. **15** in the captured position with an intermediate part removed;

[0082] FIG. **17** is a fragmentary, enlarged view of the apex release assembly of FIG. **16** in the released position;

[0083] FIG. **18** is a fragmentary, side elevational view of the delivery system of FIG. **11** showing how a user deploys the prosthesis;

[0084] FIG. **19** is a fragmentary cross-sectional view of human arteries including the aorta with the assembly of the present invention in a first step of a method for inserting the prosthesis according to the invention;

[0085] FIG. **20** is a fragmentary cross-sectional view of the arteries of FIG. **19** with the assembly in a subsequent step of the method for inserting the prosthesis;

[0086] FIG. **21** is a fragmentary cross-sectional view of the arteries of FIG. **20** with the assembly in a subsequent step of the method for inserting the prosthesis;

[0087] FIG. **22** is a fragmentary cross-sectional view of the arteries of FIG. **21** with the assembly in a subsequent step of the method for inserting the prosthesis;

[0088] FIG. **23** is a fragmentary cross-sectional view of the arteries of FIG. **22** with the assembly **15** in a subsequent step of the method for inserting the prosthesis;

[0089] FIG. **24** is a fragmentary cross-sectional view of the arteries of FIG. **23** with the assembly in a subsequent step of the method for inserting the prosthesis;

[0090] FIG. **25** is a fragmentary, diagrammatic, perspective view of the coaxial relationship of delivery system lumen according to the invention;

[0091] FIG. **26** is a fragmentary, cross-sectional view of the apex release assembly according to the invention;

[0092] FIG. **27** is a fragmentary, side elevational view of the stent graft of FIG. **1** with various orientations of radiopaque markers according to the invention;

[0093] FIG. **28** is a fragmentary perspective view of the stent graft of FIG. **1** with various orientations of radiopaque markers according to the invention;

[0094] FIG. **29** is a perspective view of a distal apex head of the apex capture device of FIG. **13**;

[0095] FIG. **30** is a fragmentary side elevational view of the distal apex head of FIG. **29** and a proximal apex body of the apex capture device of FIG. **13** with portions of a bare stent in the captured position;

[0096] FIG. **31** is a fragmentary, side elevational view of the distal apex head and proximal apex body of FIG. **30** with a portion of the proximal apex body cut away to illustrate the bare stent in the captured position;

[0097] FIG. **32** is a fragmentary side elevational view of the distal apex head and proximal apex body of FIG. **30** in the released position;

[0098] FIG. **33** is a fragmentary, cross-sectional view of an embodiment of handle assemblies according to the invention;

[0099] FIG. **34** is a cross-sectional view of a pusher clasp rotator of the handle assembly of FIG. **33**;

[0100] FIG. **35** is a plan view of the pusher clasp rotator of FIG. **34** viewed along line C-C;

[0101] FIG. **36** is a plan and partially hidden view of the pusher clasp rotator of FIG. **34** with a helix groove for a first embodiment of the handle assembly of FIGS. **10**, **11**, and **18**;

[0102] FIG. **37** is a cross-sectional view of the pusher clasp rotator of FIG. **36** along section line

[0103] A-A;

[0104] FIG. **38** is a plan and partially hidden view of the pusher clasp rotator of FIG. **36**;

[0105] FIG. **39** is a cross-sectional view of the pusher clasp rotator of FIG. **38** along section line B-B;

[0106] FIG. **40** is a perspective view of a rotator body of the handle assembly of FIG. **33**;

[0107] FIG. **41** is an elevational and partially hidden side view of the rotator body of FIG. **40**;

[0108] FIG. **42** is a cross-sectional view of the rotator body of FIG. **41** along section line A-A;

[0109] FIG. **43** is an elevational and partially hidden side view of the rotator body of FIG. **40**;

[0110] FIG. **44** is an elevational and partially hidden side view of a pusher clasp body of the handle assembly of FIG. **33**;

[0111] FIG. **45** is a cross-sectional view of the pusher clasp body of FIG. **44** along section line A-A;

[0112] FIG. **46** is a cross-sectional view of the pusher clasp body of FIG. **44** along section line B-B;

[0113] FIG. **47** is a fragmentary, side elevational view of a portion of the handle assembly of FIG. **33** with a sheath assembly according to the invention;

[0114] FIG. **48** is an exploded side elevational view of a portion of the handle assembly of FIG. **47**;

[0115] FIG. **49** is a fragmentary elevational and partially hidden side view of a handle body of **15** the handle assembly of FIG. **33**;

[0116] FIG. **50** is a fragmentary, exploded side elevational view of a portion of a second embodiment of the handle assembly according to the invention;

[0117] FIG. **51** is a fragmentary, side elevational view of the portion of FIG. **50** in a neutral position;

[0118] FIG. **52** is an exploded view of a first portion of the second embodiment of the handle assembly;

[0119] FIG. **53** is a fragmentary, exploded view of a larger portion of the second embodiment of the handle assembly as compared to FIG. **52** with the first portion and the sheath assembly;

[0120] FIG. **54** is perspective view of a clasp body of the second embodiment of the handle assembly;

[0121] FIG. **55** is an elevational side view of the clasp body of FIG. **54**;

[0122] FIG. **56** is a cross-sectional view of the clasp body of FIG. **55** along section line A-A;

[0123] FIG. **57** is a plan view of the clasp body of FIG. **54**;

[0124] FIG. **58** is a plan view of the clasp body of FIG. **57** viewed from section line B-B;

[0125] FIG. **59** is a fragmentary and partially hidden side elevational view of a clasp sleeve of the second embodiment of the handle assembly;

[0126] FIG. **60** is a fragmentary, cross-sectional view of a portion the clasp sleeve of FIG. **59** along section line A;

[0127] FIG. **61** is a fragmentary, cross-sectional view of the clasp sleeve of FIG. **59** along section line C-C;

[0128] FIG. **62** is a fragmentary and partially hidden side elevational view of the clasp sleeve of FIG. **59** rotated with respect to FIG. **59**;

[0129] FIG. **63** is a fragmentary, cross-sectional view of the nose cone and sheath assemblies of FIG. **10**;

[0130] FIG. **64** is a fragmentary, perspective view of a portion of self-alignment configuration according to the invention;

[0131] FIG. **65** is a diagrammatic, fragmentary, cross-sectional view of a distal portion of the delivery system with the self-alignment configuration according to the invention inside the descending thoracic aorta and with the self-alignment configuration in an orientation opposite a desired orientation;

[0132] FIG. **66** is a diagrammatic, fragmentary, cross-sectional view of the distal portion of the delivery system of FIG. **65** With the self-alignment configuration partially inside the descending thoracic aorta and partially inside the aortic arch and with the self-alignment configuration in an orientation closer to the desired orientation;

[0133] FIG. **67** is a diagrammatic, fragmentary, cross-sectional view of the distal portion of the delivery system of FIG. **65** with the self-alignment configuration primarily inside the aortic arch and with the self-alignment configuration substantially in the desired orientation;

[0134] FIG. **68** is a fragmentary, enlarged, partially exploded perspective view of an alternative embodiment of a distal end of the graft push lumen of FIG. **25**;

[0135] FIG. **69** is a photograph of a user bending a stent graft assembly around a curving device to impart a curve to a guidewire lumen therein;

[0136] FIG. **70** is a side elevational view of a stent graft according to the invention;

[0137] FIG. **71** is a side elevational view of an alternative embodiment of the stent graft with a clasping stent and a crown stent;

[0138] FIG. **72** is a photograph depicting a side view of the stent graft of FIG. **71**;

[0139] FIG. **73** is a photograph of a perspective view from a side of a proximal end of the stent graft of FIGS. **1** and **70** with a bare stent protruding from the proximal end thereof;

[0140] FIG. **74** is a photograph of an enlarged, perspective view from the interior of the proximal end of the stent graft of FIG. **71**;

[0141] FIG. **75** is a photograph of a perspective view from a distal end of the stent graft of FIG. **71** with an alternative embodiment of the crown stent where less of the stent is attached to the graft;

[0142] FIG. **76** is a photograph of a side view of the stent graft of FIG. **71** partially withdrawn from a flexible sheath of the delivery system according to the invention with some of the capture stent apices releasably held within the apex capture device of the delivery system.

[0143] FIG. **77** is a photograph of a perspective view of the captured stent graft of FIG. **76** from the proximal end thereof and with some of the capture stent apices releasably held within the apex capture device of the delivery system;

[0144] FIG. **78** is a photograph of a perspective view from the proximal end of the stent graft of FIGS. **1** and **70** deployed in an exemplary vessel;

[0145] FIG. **79** is a photograph of a perspective view from the proximal end of the stent graft of FIG. **71** deployed in an exemplary vessel;

[0146] FIG. **80** is a cross-sectional view of the apex capture assembly of FIGS. **13**, **14**, **29** to **32**, and **63** along a plane orthogonal to the longitudinal axis of the delivery system according to the invention without the inner sheath;

[0147] FIG. **81** is a fragmentary, cross-sectional view of the apex capture assembly of FIG. **80** along a plane orthogonal to the view plane of FIG. **80** and through the longitudinal axis of the delivery system according to the invention without the inner sheath;

[0148] FIG. **82** is a fragmentary, side elevational view of a distal end of the delivery system according to the invention with the inner sheath in a curved orientation and having an alternative embodiment of a D-shaped marker thereon;

[0149] FIG. **83** is a fragmentary, plan view of the distal end of FIG. **82** viewed from above;

[0150] FIG. **84** is a fragmentary, plan and partially hidden view of the distal end of FIG. **82** viewed from below with the D-shaped marker on the opposite top side;

[0151] FIG. **85** is a fragmentary, elevational view of the distal end of FIG. **82** viewed from the top of FIG. **82** and parallel to the longitudinal axis of the catheter of the delivery system;

[0152] FIG. **86** is a side elevational view of the delivery system according to the invention with an alternative embodiment of a rotating distal handle;

[0153] FIG. **87** is a fragmentary, cross-sectional view of the rotating distal handle of FIG. **86**;

[0154] FIG. **88** is a is a fragmentary, cross-sectional view of an alternative embodiment of the rotating distal handle of FIG. **86**;

[0155] FIG. **89** is a fragmentary, perspective view of the distal end of the delivery system of FIG. **86**;

[0156] FIG. **90** is a perspective view from the distal side of another embodiment of the delivery system of the invention;

[0157] FIG. **91** is a fragmentary, enlarged, exploded, side elevational view of the apex release assembly of the delivery system of FIG. **90**;

[0158] FIG. **92** is a fragmentary, enlarged, partially exploded, side elevational view of the locking knob assembly of the delivery system of FIG. **90**;

[0159] FIG. **93** is a perspective view of a clasp sleeve of a handle assembly of the delivery system of FIG. **90**;

[0160] FIG. **94** is an exploded, perspective view of a clasp body assembly of the handle assembly of FIG. **90**;

[0161] FIG. **95** is an exploded, perspective view of a rotator assembly of the handle assembly of FIG. **90**;

[0162] FIG. **96** is a perspective view of the rotator assembly of FIG. **95** in an assembled state;

[0163] FIG. **97** is a fragmentary, exploded, side elevational view of a delivery sheath of the delivery system of FIG. **90**;

[0164] FIG. **98** is a fragmentary, exploded, side elevational view of the delivery sheath of FIG. **97** rotated approximately 90 degrees;

[0165] FIG. **99** is an enlarged, side elevational view of a portion of the delivery sheath of FIG. **98**;

[0166] FIG. **100** is a fragmentary, enlarged, side elevational view of the distal end of the delivery system of FIG. **90**;

[0167] FIG. **101** is a fragmentary, partially hidden side elevational view and partially cross-sectional view of the proximal end of the handle assembly of FIG. **90** with the sheath lumen removed;

[0168] FIG. **102** is a fragmentary, cross-sectional view of the proximal end of the handle assembly of FIG. **101**;

[0169] FIG. **103** is a fragmentary, enlarged, cross-sectional view of the actuation knob and clasp body assemblies of the handle assembly of FIG. **102**;

[0170] FIG. **104** is a fragmentary, enlarged, cross-sectional view of the rotator assembly of the handle assembly of FIG. **102**;

[0171] FIG. **105** is a fragmentary, further-enlarged, cross-sectional view of the rotator assembly of the handle assembly of FIG. **104**;

[0172] FIG. **106** is a fragmentary, transverse cross-sectional view of the handle assembly of the delivery system of FIG. **90**;

[0173] FIG. **107** is a fragmentary, transverse cross-sectional view of the handle assembly of the delivery system of FIG. **90**;

[0174] FIG. **108** is a fragmentary, transverse cross-sectional view of the handle assembly of the delivery system of FIG. **90**;

[0175] FIG. **109** is a fragmentary, transverse cross-sectional view of the handle assembly of the delivery system of FIG. **90**;

[0176] FIG. **110** is a fragmentary, transverse cross-sectional view of the handle assembly of the delivery system of FIG. **90**;

[0177] FIG. **111** is a fragmentary, enlarged, transverse cross-sectional view of the handle assembly of FIG. **110**;

[0178] FIG. **112** is a fragmentary, transverse cross-sectional view of the handle assembly of the delivery system of FIG. **90**;

[0179] FIG. **113** is a fragmentary, enlarged transverse cross-sectional view of the handle assembly of FIG. **112**;

[0180] FIG. **114** is a fragmentary, transverse cross-sectional view of the handle assembly of the delivery system of FIG. **90**;

[0181] FIG. **115** is a fragmentary, transverse cross-sectional view of the handle assembly of the delivery system of FIG. **90**;

[0182] FIG. **116** is a fragmentary, transverse cross-sectional view of the handle assembly of the delivery system of FIG. **90**;

[0183] FIG. **117** is a fragmentary, transverse cross-sectional view of the handle assembly of the delivery system of FIG. **90**;

[0184] FIG. **118** is a fragmentary, transverse cross-sectional view of the handle assembly of the delivery system of FIG. **90**;

[0185] FIG. **119** is a fragmentary, shaded, cross-sectional view of a distal portion of the handle assembly of FIG. **90** without the proximal handle;

[0186] FIG. **120** is a fragmentary, diagrammatic cross-sectional view of the thoracic aorta with a prior art stent graft having an inflow plane at an angle to an implant plane;

[0187] FIG. **121** is a fragmentary, diagrammatic cross-sectional view of the thoracic aorta with a stent graft placed according to the invention with the inflow plane aligned with the implant plane;

[0188] FIG. **122** is a diagrammatic, side elevational view of a first exemplary embodiment of a stent graft centering device according to the invention;

[0189] FIG. **123** is a fragmentary, diagrammatic, cross-sectional view of the stent graft centering device of FIG. **122** in an aorta;

[0190] FIG. **124** is a fragmentary, diagrammatic, perspective view of a second exemplary embodiment of a stent graft centering device according to the invention;

[0191] FIG. **125** is a fragmentary, diagrammatic, cross-sectional view of the stent graft centering device of FIG. **124** with one balloon inflated in an aorta;

[0192] FIG. **126** is a diagrammatic, plan view of the stent graft centering device of FIG. **124** with three balloons inflated;

[0193] FIG. **127** is a diagrammatic, hidden, perspective view of a fourth exemplary embodiment of a stent graft centering device according to the invention in a first position;

[0194] FIG. **128** is a diagrammatic, hidden, perspective view of the stent graft centering device of FIG. **127** in a second position;

[0195] FIG. **129** is a fragmentary, diagrammatic, cross-sectional view of a fifth exemplary embodiment of a stent graft centering device according to the invention;

[0196] FIG. **130** is a fragmentary, diagrammatic, cross-sectional illustration forces acting upon the stent graft centering device of FIG. **129**;

[0197] FIG. **131** is a fragmentary, diagrammatic, cross-sectional view of a sixth exemplary **20** embodiment of a stent graft centering device according to the invention in a first position;

[0198] FIG. **132** is a fragmentary, diagrammatic, cross-sectional view of the stent graft centering device of FIG. **131** in a second position;

[0199] FIG. **133** is a fragmentary, diagrammatic, perspective view of a seventh exemplary embodiment of a stent graft centering device according to the invention in a closed position;

[0200] FIG. **134** is a fragmentary, diagrammatic, perspective view of the stent graft centering device of FIG. **133** in an open position;

[0201] FIG. **135** is a fragmentary, diagrammatic, perspective view of the stent graft centering device of FIG. **133** in captured state;

[0202] FIG. **136** is a fragmentary, diagrammatic, side elevational view of an eighth exemplary embodiment of a stent graft centering device according to the invention;

[0203] FIG. **137** is a fragmentary, diagrammatic, side elevational view of the stent graft centering device of FIG. **136** in an extended state;

[0204] FIGS. **138** and **140** is a fragmentary, diagrammatic, exploded view the stent graft centering device of FIG. **136**;

[0205] FIG. **139** is a fragmentary, diagrammatic, side elevational view the stent graft centering device of FIG. **136** in a retracted state with a stent captured;

[0206] FIG. **141** is a fragmentary, diagrammatic, side elevational view the stent graft centering device of FIG. **136** in an extended centering state with a stent captured;

[0207] FIG. **142** is a fragmentary, diagrammatic, side elevational view the stent graft centering device of FIG. **136** in an extended centering state with a stent released;

[0208] FIG. **143** is a fragmentary, diagrammatic, cross-sectional view of an ninth exemplary embodiment of a stent graft centering device according to the invention in an aorta;

[0209] FIG. **144** is a fragmentary, diagrammatic, side elevational view of a tenth exemplary embodiment of a stent graft centering device according to the invention in a straight orientation;

[0210] FIG. **145** is a fragmentary, diagrammatic, side elevational view of the stent graft centering device of FIG. **144** in a crooked orientation;

[0211] FIG. **146** is a fragmentary, diagrammatic, side elevational view of the stent graft centering device of FIG. **144** in a bent orientation;

[0212] FIG. **147** is a fragmentary, diagrammatic, cross-sectional view of an eleventh exemplary embodiment of a stent graft centering device according to the invention in a centered orientation;

[0213] FIG. **148** is a fragmentary, diagrammatic, cross-sectional view of the stent graft centering device of FIG. **147** with a delivery system therein and a stent graft closed;

[0214] FIG. **149** is a fragmentary, diagrammatic, cross-sectional view of the stent graft centering device of FIG. **147** with a delivery system therein and a stent graft open;

[0215] FIGS. **150** and **150**A are fragmentary, diagrammatic, perspective views of the stent graft centering device of FIG. **147** with balloons inflated.

[0216] FIG. **151** is a fragmentary, diagrammatic, perspective view of the stent graft centering device of FIG. **147** with balloons deflated;

[0217] FIG. **152** is a fragmentary, diagrammatic, cross-sectional view of a twelfth exemplary embodiment of a stent graft centering device according to the invention in an aorta;

[0218] FIG. **153** is a fragmentary, diagrammatic, cross-sectional view of the stent graft centering device of FIG. **152** centering a stent graft delivery device with the stent graft closed;

[0219] FIG. **154** is a fragmentary, diagrammatic, cross-sectional view of the stent graft centering device of FIG. **152** centering a stent graft delivery device with the stent graft open;

[0220] FIG. **155** is a fragmentary, diagrammatic, cross-sectional view of the stent graft centering device of FIG. **152**;

[0221] FIG. **156** is a fragmentary, diagrammatic, side elevational view of a thirteenth exemplary embodiment of a stent graft centering device according to the invention;

[0222] FIG. **157** is a fragmentary, diagrammatic, side elevational view of a prior art stent graft in an aorta having the inflow plane at an angle to the implant plane;

[0223] FIG. **158** is a fragmentary, diagrammatic, side elevational view of the stent graft centering device of FIG. **156** in an aorta having the inflow plane aligned with the implant plane;

[0224] FIG. **159** is a fragmentary, diagrammatic, perspective view of a fourteenth exemplary embodiment of a stent graft centering device according to the invention;

[0225] FIG. **160** is a fragmentary, diagrammatic, perspective view of a fifteenth exemplary embodiment of a stent graft centering device according to the invention;

[0226] FIG. **161** is a fragmentary, diagrammatic, perspective view of a control assembly of the stent graft centering device of FIG. **160**;

[0227] FIG. **162** is a fragmentary, diagrammatic, perspective view of a sixteenth exemplary embodiment of a stent graft centering device according to the invention in a first configuration;

[0228] FIG. **163** is a fragmentary, diagrammatic, perspective view of the stent graft centering device of FIG. **162** in a second configuration;

[0229] FIG. **164** is a fragmentary, diagrammatic, side elevational view of a seventeenth exemplary embodiment of a stent graft centering device according to the invention in an expanded orientation;

[0230] FIG. **165** is a fragmentary, diagrammatic, side elevational view of the stent graft centering device of FIG. **164** in a further expanded orientation;

[0231] FIG. **166** is a fragmentary, diagrammatic, side elevational view of the stent graft centering device of FIG. **164** in a contracted orientation;

[0232] FIG. **167** is a fragmentary, diagrammatic, side elevational view of the stent graft centering device of FIG. **164** in an open position;

[0233] FIG. **167**A is a fragmentary, diagrammatic, enlarged side elevational view of a portion of the stent graft centering device of FIG. **167** in the open position;

[0234] FIG. **168** is a fragmentary, diagrammatic, enlarged, side elevational view of a portion of the stent graft centering device of FIG. **164** in a captured position;

[0235] FIG. **169** is a fragmentary, diagrammatic, side elevational view of the stent graft centering device of FIG. **167** in a captured position of a stent;

[0236] FIG. **170** is a fragmentary, diagrammatic, perspective view of an eighteenth exemplary embodiment of a stent graft centering device according to the invention in a closed orientation;

[0237] FIG. **171** is a fragmentary, diagrammatic, perspective view of the stent graft centering device of FIG. **110** through a stent graft;

[0238] FIG. **172** is a fragmentary, diagrammatic, perspective view of the stent graft centering device of FIG. **171** in an open orientation without the stent graft;

[0239] FIG. **173** is a fragmentary, diagrammatic, side elevational view of a nineteenth exemplary embodiment of a stent graft centering device according to the invention in a closed orientation;

[0240] FIG. **174** is a fragmentary, diagrammatic, side elevational view of the stent graft centering device of FIG. **173** in an open orientation;

[0241] FIG. **175** is a fragmentary, diagrammatic, side elevational view of the stent graft centering device of FIG. **174** through a stent graft; and

[0242] FIG. **176** is a fragmentary, diagrammatic, side elevational view of a twentieth exemplary embodiment of a stent graft centering device according to the invention.

DESCRIPTION OF EXEMPLARY EMBODIMENTS

[0243] While the specification concludes with claims defining the features of the invention that are regarded as novel, it is believed that the invention will be better understood from a consideration of the following description in conjunction with the drawing figures, in which like reference numerals are carried forward.

[0244] The present invention provides a stent graft, delivery system, and method for implanting a prosthesis with a two-part expanding delivery system that treats, in particular, thoracic aortic defects from the brachiocephalic level of the aortic arch distally to a level just superior to the celiac axis and provides an endovascular foundation for an anastomosis with the thoracic aorta, while providing an alternative method for partial/total thoracic aortic repair by excluding the vessel defect and making surgical repair of the aorta unnecessary. The stent graft of the present invention, however, is not limited to use in the aorta. It can be endoluminally inserted in any accessible artery that could accommodate the stent graft's dimensions.

[0245] Stent Graft

[0246] The stent graft according to the present invention provides various features that, heretofore, have not been applied in the art and, thereby, provide a vessel repair device that implants/conforms more efficiently within the natural or diseased course of the aorta, decreases the likelihood of vessel puncture, and increases the blood-tight vascular connection, and decreases the probability of graft mobility.

[0247] The stent graft is implanted endovascularly before or during or in place of an open repair of the vessel (i.e., an arch, in particular, the ascending and/or descending portion of the aorta) through a delivery system described in detail below. The typical defects treated by the stent graft are aortic aneurysms, aortic dissections, and other diseases such as penetrating aortic ulcer, coarctation, and patent ductus arteriosus, related to the aorta. When endovascularly placed in the aorta, the stent graft forms a seal in the vessel and automatically affixes itself to the vessel with resultant effacement of the pathological lesion.

[0248] Referring now to the figures of the drawings in detail and first, particularly to FIG. **1** thereof, there is shown an improved stent graft **1** having a graft sleeve **10** and a number of stents **20**. These stents **20** are, preferably, made of nitinol, an alloy having particularly special properties allowing it to rebound to a set configuration after compression, the rebounding property being based upon the temperature at which the alloy exists. For a detailed explanation of nitinol and its application with regard to stents, see, e.g., U.S. Pat. Nos. 4,665,906, 5,067,957, and 5,597,378 to Jervis and to Gianturco.

[0249] The graft sleeve **10** is cylindrical in shape and is made of a woven graft material along its entire length. The graft material is, preferably, polyester, in particular, polyester referred to under the name DACRON® or other material types like Expanded Polytetrafluoroethylene ("EPTFE"), or other polymeric based coverings. The tubular graft sleeve **10** has a framework of individual lumen-supporting wires each referred to in the art as a stent **20**. Connection of each stent **20** is, preferably, performed by sewing a polymeric (nylon, polyester) thread around an entirety of the stent **20** and through the graft sleeve **10**. The stitch spacings are sufficiently close to prevent any edge of the stent **20** from extending substantially further from the outer circumference of the graft sleeve **10** than the diameter of the wire itself Preferably, the stitches have a 0.5 mm to 5 mm spacing.

[0250] The stents **20** are sewn either to the exterior or interior surfaces of the graft sleeve **10**. FIG. **1** illustrates all stents **20**, **30** on the exterior surface **16** of the graft sleeve **10**. In an exemplary non-illustrated embodiment, the most proximal **23** and distal stents and a bare stent **30** are connected to the interior surface of the graft sleeve **10** and the remainder of the stents **20** are connected to the exterior surface **16**. Another possible non-illustrated embodiment alternates connection of the stents **20**, **30** to the graft sleeve **10** from the graft exterior surface to the graft interior surface, the alternation having any periodic sequence.

[0251] A stent **20**, when connected to the graft sleeve **10**, radially forces the graft sleeve **10** open to a predetermined diameter D. The released radial force creates a seal with the vessel wall and affixes the graft to the vessel wall when the graft is implanted in the vessel and is allowed to expand.

[0252] Typically, the stents **20** are sized to fully expand to the diameter D of the fully expanded graft sleeve **10**. However, a characteristic of the present invention is that each of the stents **20** and **30** has a diameter larger than the diameter D of the fully expanded graft sleeve **10**. Thus, when the stent graft **1** is fully expanded and resting on the internal surface of the vessel where it has been placed, each stent **20** is imparting independently a radially directed force to the graft sleeve **10**. Such pre-compression, as it is referred to herein, is applied (1) to ensure that the graft covering is fully extended, (2) to ensure sufficient stent radial force to make sure sealing occurs, (3) to affix the stent graft and prevent it from kinking, and (4) to affix the stent graft and prevent migration.

[0253] Preferably, each of the stents **20** is formed with a single nitinol wire. Of course other biocompatible materials can be used, for example, stainless steel, biopolymers, cobalt chrome, and titanium alloys.

[0254] An exemplary shape of each stent **20** corresponds to what is referred in the art as a Z-stent, see, e.g., Gianturco (although the shape of the stents **20** can be in any form that satisfies the functions of a self-expanding stent). Thus, the wire forming the stent **20** is a ring having a wavy or sinusoidal shape. In particular, an elevational view orthogonal to the center axis **21** of the stent **20** reveals a shape somewhere between a triangular wave and a sinusoidal wave as shown in FIG. **2**. In other words, the view of FIG. **2** shows that the stents **20** each have alternating proximal **22** and distal **24** apices. Preferably, the apices have a radius r that does not present too great of a point towards a vessel wall to prevent any possibility of puncturing the vessel, regardless of the complete circumferential connection to the graft sleeve **10**. In particular, the radius r of curvature of the proximal **22** and distal **24** apices of the stent **20** are, preferably, equal. The radius of curvature r is between approximately 0.1 mm and approximately 3.0 mm, in particular, approximately 0.5 rom.

[0255] Another advantageous feature of a stent lies in extending the longitudinal profile along which the stent contacts the inner wall of a vessel. This longitudinal profile can be explained with reference to FIGS. **3** to **7**.

[0256] Prior art stents and stents according to the present invention are formed on mandrels **29**, **29'** by winding the wire around the mandrel **29**, **29'** and forming the apexes **22**, **24**, **32**, **34** by wrapping the wire over non-illustrated pins that protrude perpendicular from the axis of the mandrel. Such pins, if illustrated, would be located in the holes illustrated in the mandrels **29**, **29'** of FIGS. **4** and **6**. Prior art stents are formed on a round mandrel **29** (also referred to as a bar). A stent **20'** formed on a round mandrel **29** has a profile that is rounded (see FIG. **5**). Because of the rounded profile, the stent **20'** does not conform evenly against the inner wall of the vessel **2** in which it is inserted. This disadvantage is critical in the area of stent graft **1** seal zones—areas where the ends of the graft **10** need to be laid against the inner wall of the vessel **2**. Clinical experience reveals that stents **20'** formed with the round man-

drel **29** do not lie against the vessel **2**; instead, only a mid-section of the stent **20'** rests against the vessel **2**, as shown in FIG. **5**. Accordingly, when such a stent **20'** is present at either of the proximal **12** or distal **14** ends of the stent graft **1**, the graft material flares away from the wall of the vessel **2** into the lumen—a condition that is to be avoided. An example of this flaring can be seen by comparing the upper and lower portions of the curved longitudinal profile of the stent **20'** in FIG. **5** with the linear longitudinal profile of the vessel **2**.

[0257] To remedy this problem and ensure co-columnar apposition of the stent and vessel, stents **20** of the present invention are formed on a multiple-sided mandrel. In particular, the stents **20** are formed on a polygonal-shaped mandrel **29'**. The mandrel **29'** does not have sharp edges. Instead, it has flat sections and rounded edge portions between the respective flat sections. Thus, a stent formed on the mandrel **29'** will have a cross-section that is somewhat round but polygonal, as shown in FIG. **3**. The cross-sectional view orthogonal to the center axis **21** of such a stent **20** will have beveled or rounded edges **31** (corresponding to the rounded edge portions of the mandrel **29'**) disposed between flat sides or struts **33** (corresponding to the flat sections of the mandrel **29'**).

[0258] To manufacture the stent **20**, apexes of the stents **20** are formed by winding the wire over non-illustrated pins located on the rounded portions of the mandrel **29'**. Thus, the struts **33** lying between the apexes **22**, **24**, **32**, **34** of the stents **20** lie flat against the flat sides of the mandrel **29'**. When so formed on the inventive mandrel **29'**, the longitudinal profile is substantially less rounded than the profile of stent **20'** and, in practice, is substantially linear.

[0259] For stents **20** having six proximal **22** and six distal **24** apices, the stents **20** are formed on a dodecahedron-shaped mandrel **29'** (a mandrel having twelve sides), which mandrel **29'** is shown in FIG. **6**. A stent **20** formed on such a mandrel **29'** will have the cross-section illustrated in FIG. **3**.

[0260] The fourteen-apex stent **20** shown in FIG. **7** illustrates a stent **20** that has been formed on a fourteen-sided mandrel. The stent **20** in FIG. **7** is polygonal in cross-section (having fourteen sides) and, as shown in FIG. **7**, has a substantially linear longitudinal profile. Clinically, the linear longitudinal profile improves the stent's **20** ability to conform to the vessel **2** and press the graft sleeve **10** outward in the sealing zones at the extremities of the individual stent **20**.

[0261] Another way to improve the performance of the stent graft **1** is to provide the distal-most stent **25** on the graft **10** (i.e., downstream) with additional apices and to give it a longer longitudinal length (i.e., greater amplitude) and/or a longer circumferential length. When a stent **25** having a longer circumferential length is sewn to a graft, the stent graft **1** will perform better clinically. The improvement, in part, is due to a need for the distal portion of the graft material **10** to be pressed firmly against the wall of the vessel. The additional apices result in additional points of contact between the stent graft **1** and vessel wall, thus ensuring better apposition to the wall of the vessel and better sealing of the graft material **10** to the vessel. The increased apposition and sealing substantially improves the axial alignment of the distal end **14** of the stent graft **1** to the vessel. As set forth above, each of the stents **20** and **30** has a diameter larger than the diameter D of the fully expanded graft sleeve **10**. Thus, if the distal stent **25** also has a diameter larger than the diameter D, it will impart a greater radial bias on all 360 degrees of the corresponding section of the graft than stents not having such an oversized configuration.

[0262] A typical implanted stent graft **1** typically does not experience a lifting off at straight portions of a vessel because the radial bias of the stents acting upon the graft sleeve give adequate pressure to align the stent and graft sleeve with the vessel wall. However, when a typical stent graft is implanted in a curved vessel (such as the aorta), the distal end of the stent graft **1** does experience a lift off from the vessel wall. The increased apposition and sealing of the stent graft **1** according to the present invention substantially decreases the probability of lift off because the added height and additional apices enhance the alignment of the stent graft perpendicular to the vessel wall as compared to prior art stent grafts (no lift off occurs).

[0263] The number of total apices of a stent is dependent upon the diameter of the vessel in which the stent graft **1** is to be implanted. Vessels having a smaller diameter have a smaller total number of apices than a stent to be implanted in a vessel having a larger diameter. Table 1 below indicates exemplary stent embodiments for vessels having different diameters. For example, if a vessel has a 26 or 27 mm diameter, then an exemplary diameter of the graft sleeve **10** is 30 mm. For a 30 mm diameter graft sleeve, the intermediate stents **20** will have 5 apices on each side (proximal and distal) for a total of 10 apices. In other words, the stent defines 5 periodic "waves." The distal-most stent **25**, in comparison, defines 6 periodic "waves" and, therefore, has 12 total apices. It is noted that the distal-most stent **25** in FIG. **1** does not have the additional apex. While Table 1 indicates exemplary embodiments, these configurations can be adjusted or changed as needed.

TABLE 1

Vessel Diameter (mm)	Graft Diameter (mm)	Stent Apices/Side (Distal-most Stent #)
19	22	5 (5)
20-21	24	5 (5)
22-23	26	5 (5)
24-25	28	5 (6)
26-27	30	5 (6)
28-29	32	6 (7)
30-31	34	6 (7)
32-33	36	6 (7)
34	38	6 (7)
35-36	40	7 (8)
37-38	42	7 (8)
39-40	44	7 (8)
41-42	46	7 (8)

[0264] To increase the security of the stent graft **1** in a vessel, an exposed or bare stent **30** is provided on the stent graft **1**, preferably, only at the proximal end **12** of the graft sleeve **10**—proximal meaning that it is attached to the portion of the graft sleeve **10** from which the blood flows into the sleeve, i.e., blood flows from the bare stent **30** and through the sleeve **10** to the left of FIG. **1**. The bare stent **30** is not limited to being attached at the proximal end **12**. Another non-illustrated bare stent can be attached similarly to the distal end **14** of the graft sleeve **10**.

[0265] Significantly, the bare stent **30** is only partially attached to the graft sleeve **10**. Specifically, the bare stent **30** is fixed to the graft sleeve **10** only at the distal apices **34** of the bare stent **30**. Thus, the bare stent **30** is partially free to extend the proximal apices **32** away from the proximal end of the graft sleeve **10**.

[0266] The bare stent **30** has various properties, the primary one being to improve the apposition of the graft material to the contour of the vessel wall and to align the proximal portion of the graft covering in the lumen of the arch and provide a blood-tight closure of the proximal end **12** of the graft sleeve **10** so that blood does not pass between the vascular inside wall and outer surface **16** of the sleeve **10** (endoleak).

[0267] An exemplary configuration for the radius of curvature a of the distal apices **34** is substantially equal to the radius r of the proximal **22** and distal **24** apices of the stent **20**, in particular, it is equal at least to the radius of curvature r of the proximal apices of the stent **20** directly adjacent the bare stent **30**. Thus, as shown in FIG. **8**, a distance between the proximal apices **22** of the most proximal stent **23** and crossing points of the exposed portions of the bare stent **30** are substantially at a same distance from one another all the way around the circumference of the proximal end **12** of the graft sleeve **10**. Preferably, this distance varies based upon the graft diameter. Accordingly, the sinusoidal portion of the distal apices **34** connected to the graft sleeve **10** traverse substantially the same path as that of the stent **23** closest to the bare stent **30**. Thus, the distance d between the stent **22** and all portions of the bare stent **30** connected to the graft sleeve **10** remain constant. Such a configuration is advantageous because it maintains the symmetry of radial force of the device about the circumference of the vessel and also aids in the synchronous, simultaneous expansion of the device, thus increasing apposition of the graft material to the vessel wall to induce a proximal seal—and substantially improve the proximal seal—due to increasing outward force members in contact with the vessel wall.

[0268] Inter-positioning the stents **23**, **30** in phase with one another, creates an overlap, i.e., the apices **34** of the bare stent **30** are positioned within the troughs of the stent **23**. A further advantage of such a configuration is that the overlap provides twice as many points of contact between the proximal opening of the graft **10** and the vessel in which the stent graft **1** is implanted. The additional apposition points keep the proximal opening of the graft sleeve **10** open against the vessel wall, which substantially reduces the potential for endoleaks. In addition, the overlap of the stents **23**, **30** increases the radial load or resistance to compression, which functionally increases fixation and reduces the potential for device migration.

[0269] In contrast to the distal apices **34** of the bare stent **30**, the radius of curvature β of the proximal apices **32** (those apices that are not sewn into the graft sleeve **10**) is significantly larger than the radius of curvature a of the distal apices **34**. An exemplary configuration for the bare stent apices has a radius approximately equal to 1.5 mm for the proximal apices **32** and approximately equal to 0.5 mm for the distal apices **34**. Such a configuration substantially prevents perforation of the blood vessel by the proximal apices **32**, or, at a minimum, makes is much less likely for the bare stent **30** to perforate the vessel because of the less-sharp curvature of the proximal apices **32**.

[0270] The bare stent **30** also has an amplitude greater than the other stents **20**. Preferably, the peak-to-peak amplitude of the stents **20** is approximately 1.3 cm to 1.5 cm, whereas the peak-to-peak amplitude of the bare stent **30** is approximately 2.5 cm to 4.0 cm. Accordingly, the force exerted by the bare stent **30** on the inner wall of the aorta (due to the bare stent **30** expanding to its native position) is spread over a larger surface area. Thus, the bare stent **30** of the present invention presents a less traumatic radial stress to the interior of the vessel wall—a characteristic that, while less per square mm than an individual one of the stents **20** would be, is sufficient, nonetheless, to retain the proximal end **12** in position. Simultaneously, the taller configuration of the bare stent **30** guides the proximal opening of the stent graft in a more "squared-off" manner. Thus, the proximal opening of the stent graft is more aligned with the natural curvature of the vessel in the area of the proximal opening.

[0271] As set forth above, because the vessel moves constantly, and due to the constantly changing pressure imparted by blood flow, any stent graft placed in the vessel has the natural tendency to migrate downstream. This is especially true when the stent graft **1** has graft sleeve segments **18** with lengths defined by the separation of the stents on either end of the segment **18**, giving the stent graft **1** an accordion, concertina, or caterpillar-like shape. When such a shape is pulsating with the vessel and while hemodynamic pressure is imparted in a pulsating manner along the stent graft from the proximal end **12** to the downstream distal end **14**, the stent graft **1** has a tendency to migrate downstream in the vessel. It is desired to have such motion be entirely prohibited.

[0272] Support along a longitudinal extent of the graft sleeve **10** assists in preventing such movement. Accordingly, as set forth above, prior art stent grafts have provided longitudinal **15** rods extending in a straight line from one stent to another.

[0273] The present invention, however, provides a longitudinal, spiraling/helical support member **40** that, while extending relatively parallel to the longitudinal axis **11** of the graft sleeve **10**, is not aligned substantially parallel to a longitudinal extent of the entirety of the stent graft **1** as done in the prior art. "Relatively parallel" is referred to herein as an extent that is more along the longitudinal axis **11** of the stent graft **1** than along an axis perpendicular thereto.

[0274] Specifically, the longitudinal support member **40** has a somewhat S-turn shape, in that, a proximal portion **42** is relatively parallel to the axis **11** of the graft sleeve **10** at a first degree **41** (being defined as a degree of the 360 degrees of the circumference of the graft sleeve **10**), and a distal portion **44** is, also, relatively parallel to the axis **11** of the tube graft, but at a different second degree **43** on the circumference of the graft sleeve **10**. The difference between the first and second degrees **41**, **43** is dependent upon the length L of the graft sleeve **10**. For an approximately 20 cm (approx. 8") graft sleeve, for example, the second degree **43** is between 80 and 110 degrees away from the first degree **41**, in particular, approximately 90 degrees away. In comparison, for an approximately 9 cm (approx. 3.5") graft sleeve, the second degree **43** is between 30 and 60 degrees away from the first degree **41**, in particular, approximately 45 degrees away. As set forth below, the distance between the first and second degrees **41**, **43** is also dependent upon the curvature and the kind of curvature that the stent graft **1** will be exposed to when in vivo.

[0275] The longitudinal support member **40** has a curved intermediate portion **46** between the proximal and distal portions **42**, **44**. By using the word "portion" it is not intended to mean that the rod is in three separate parts (of course, in a particular configuration, a multi-part embodiment is possible). An exemplary embodiment of the longitudinal support member **40** is a single, one-piece rod made of stainless steel, cobalt chrome, nitinol, or polymeric material that is shaped as a fully curved helix **42**, **44**, **46** without any straight portion. In

an alternative stent graft embodiment, the proximal and distal portions **42**, **44** can be substantially parallel to the axis **11** of the stent graft **1** and the central portion **46** can be helically curved.

[0276] One way to describe an exemplary curvature embodiment of the longitudinal support member **40** can be using an analogy of asymptotes. If there are two asymptotes extending parallel to the longitudinal axis **11** of the graft sleeve **10** at the first and second degrees **41**, **43** on the graft sleeve **10**, then the proximal portion **42** can be on the first degree **41** or extend approximately asymptotically to the first degree **41** and the distal portion **44** can be on the second degree **43** or extend approximately asymptotically to the second degree **43**. Because the longitudinal support member **40** is one piece in an exemplary embodiment, the curved portion **46** follows the natural curve formed by placing the proximal and distal portions **42**, **44** as set forth herein.

[0277] In such a position, the curved longitudinal support member **40** has a centerline **45** (parallel to the longitudinal axis **11** of the graft sleeve **10** halfway between the first and second degrees **41**, **43** on the graft sleeve **10**). In this embodiment, therefore, the curved portion intersects the centerline **45** at approximately 20 to 40 degrees in magnitude, preferably at approximately 30 to 35 degrees.

[0278] Another way to describe the curvature of the longitudinal support member can be with respect to the centerline **45**. The portion of the longitudinal support member **40** between the first degree **41** and the centerline **45** is approximately a mirror image of the portion of the longitudinal support member **40** between the second degree **43** and the centerline **45**, but rotated one-hundred eighty degrees (180°) around an axis orthogonal to the centerline **45**. Such symmetry can be referred to herein as "reverse-mirror symmetrical."

[0279] The longitudinal support member **40** is, preferably, sewn to the graft sleeve **10** in the same way as the stents **20**. However, the longitudinal support member **40** is not sewn directly to any of the stents **20** in the proximal portions of the graft. In other words, the longitudinal support member **40** is independent of the proximal skeleton formed by the stents **20**. Such a configuration is advantageous because an independent proximal end creates a gimbal that endows the stent graft with additional flexibility. Specifically, the gimbaled proximal end allows the proximal end to align better to the proximal point of apposition, thus reducing the chance for endoleak. The additional independence from the longitudinal support member allows the proximal fixation point to be independent from the distal section that is undergoing related motion due to the physiological motion of pulsutile flow of blood. Also in an exemplary embodiment, the longitudinal support member **40** is pre-formed in the desired spiral/helical shape (counter-clockwise from proximal to distal), before being attached to the graft sleeve **10**.

[0280] Because vessels receiving the stent graft **1** are not typically straight (especially the aortic arch), the final implanted position of the stent graft **1** will, most likely, be curved in some way. In prior art stent grafts (which only provide longitudinally parallel support rods), there exist, inherently, a force that urges the rod, and, thereby, the entire stent graft, to the straightened, natural shape of the rod. This force is disadvantageous for stent grafts that are to be installed in an at least partly curved manner.

[0281] The curved shape of the longitudinal support member **40** according to the present invention eliminates at least a majority, or substantially all, of this disadvantage because the longitudinal support member's **40** natural shape is curved. Therefore, the support member **40** imparts less of a force, or none at all, to straighten the longitudinal support member **40**, and, thereby, move the implanted stent graft in an undesirable way. At the same time, the curved longitudinal support member **40** negates the effect of the latent kinetic force residing in the aortic wall that is generated by the propagation of the pulse wave and systolic blood pressure in the cardiac cycle, which is, then, released during diastole. As set forth in more detail below, the delivery system of the present invention automatically aligns the stent graft **1** to the most optimal position while traversing the curved vessel in which it is to be implanted, specifically, the longitudinal support member **40** is placed substantially at the superior longitudinal surface line of the curved aorta (with respect to anatomical position).

[0282] In an exemplary embodiment, the longitudinal support member **40** can be curved in a patient-customized way to accommodate the anticipated curve of the actual vessel in which the graft will be implanted. Thus, the distance between the first and second degrees **41**, **43** will be dependent upon the curvature and the kind of curvature that the stent graft **1** will be exposed to when in vivo. As such, when implanted, the curved longitudinal support member **40** will, actually, exhibit an opposite force against any environment that would alter its conformance to the shape of its resident vessel's existing course(es).

[0283] Preferably, the support member **40** is sewn, in a similar manner as the stents **20**, on the 5 outside surface **16** of the graft sleeve **10**.

[0284] In prior art support rods, the ends thereof are merely a terminating end of a steel or nitinol rod and are, therefore, sharp. Even though these ends are sewn to the tube graft in the prior art, the possibility of tearing the vessel wall still exists. It is, therefore, desirable to not provide the support rod with sharp ends that could puncture the vessel in which the stent graft is placed.

[0285] The two ends of the longitudinal support member **40** of the present invention do not end abruptly. Instead, each end of the longitudinal support member loops **47** back upon itself such that the end of the longitudinal support member along the axis of the stent graft is not sharp and, instead, presents an exterior of a circular or oval shape when viewed from the ends **12**, **14** of the graft sleeve **10**. Such a configuration substantially prevents the possibility of tearing the vessel wall and also provides additional longitudinal support at the oval shape by having two longitudinally extending sides of the oval **47**.

[0286] In addition, in another embodiment, the end of the longitudinal support member may be connected to the second proximal stent **28** and to the most distal stent. This configuration would allow the longitudinal support member to be affixed to stent **28** (see FIG. **1**) and the most distal stent for support while still allowing for the gimbaled feature of the proximal end of the stent graft to be maintained.

[0287] A significant feature of the longitudinal support member **40** is that the ends of the longitudinal support member **40** may not extend all the way to the two ends **12**, **14** of the graft sleeve **10**. Instead, the longitudinal support member **40** terminates at or prior to the second-to-last stent **28** at the proximal end **12**, and, if desired, prior to the second-to-last stent **28'** at the distal end **14** of the graft sleeve **10**. Such an ending configuration (whether proximal only or both proximal and distal) is chosen for a particular reason—when the longitudinal support member **40** ends before either of the planes defined by cross-sectional lines **52**, **52'**, the sleeve **10**

and the stents **20** connected thereto respectively form gimbaled portions **50**, **50'**. In other words, when a grasping force acting upon the gimbaled ends **50**, **50'** moves or pivots the cross-sectional plane defining each end opening of the graft sleeve **10** about the longitudinal axis **11** starting from the planes defined by the cross-sectional lines **52**, **52'**, then the moving portions **50**, **50'** can be oriented at any angle γ about the center of the circular opening in all directions (360 degrees), as shown in FIG. **8**. The natural gimbal, thus, allows the ends **50**, **50'** to be inclined in any radial direction away from the longitudinal axis **11**.

[0288] Among other things, the gimbaled ends **50**, **50'** allow each end opening to dynamically align naturally to the curve of the vessel in which it is implanted. A significant advantage of the gimbaled ends **50**, **50'** is that they limit propagation of the forces acting upon the separate parts. Specifically, a force that, previously, would act upon the entirety of the stent graft **1**, in other words, both the end portions **50**, **50'** and the middle portion of the stent graft **1** (i.e., between planes **52**, **52'**), now principally acts upon the portion in which the force occurs. For example, a force that acts only upon one of the end portions **50**, **50'** substantially does not propagate into the middle portion of the stent graft **1** (i.e., between planes **52**, **52'**). More significantly, however, when a force acts upon the middle portion of the stent graft **1** (whether moving longitudinally, axially (dilation), or in a torqued manner), the ends **50**, **50'**, because they are gimbaled, remain relatively completely aligned with the natural contours of the vessel surrounding the respective end **50**,'**50'** and have virtually none of the force transferred thereto, which force could potentially cause the ends to grate, rub, or shift from their desired fixed position in the vessel. Accordingly, the stent graft ends **50**,**50'** remain fixed in the implanted position and extend the seating life of the stent graft **1**.

[0289] Another advantage of the longitudinal support member **40** is that it increases the columnar strength of the graft stent **1**. Specifically, the material of the graft sleeve can be compressed easily along the longitudinal axis **11**, a property that remains true even with the presence of the stents **20** so long as the stents **20** are attached to the graft sleeve **10** with a spacing between the distal apices **24** of one stent **20** and the proximal apices **22** of the next adjacent stent **20**. This is especially true for the amount of force imparted by the flow of blood along the extent of the longitudinal axis **11**. However, with the longitudinal support member **40** attached according to the present invention, longitudinal strength of the stent graft **1** increases to overcome the longitudinal forces imparted by blood flow.

[0290] Another benefit imparted by having such increased longitudinal strength is that the stent graft **1** is further prevented from migrating in the vessel because the tube graft is not compressing and expanding in an accordion-like manner—movement that would, inherently, cause graft migration.

[0291] A further measure for preventing migration of the stent graft **1** is to equip at least one of any of the individual stents **20**, **30** or the longitudinal support member **40** with protuberances **60**, such as barbs or hooks (FIG. **3**). See, e.g., United States Patent Publication 2002/0052660 to Greenhalgh. In an exemplary embodiment of the present invention, the stents **20**, **30** are secured to the outer circumferential surface **16** of the graft sleeve **10**. Accordingly, if the stents **20** (or connected portions of stent **30**) have protuberances **60** protruding outwardly, then such features would catch the interior wall of the vessel and add to the prevention of stent graft **1** migration. Such an embodiment can be preferred for aneurysms but is not preferred for the fragile characteristics of dissections because such protuberances **60** can excoriate the inner layer(s) of the vessel and cause leaks between layers, for example.

[0292] As shown in FIG. **9**, the stent graft **1** is not limited to a single graft sleeve **10**. Instead, the entire stent graft can be a first stent graft **100** having all of the features of the stent graft **1** described above and a second stent graft **200** that, instead of having a circular extreme proximal end **12**, as set forth above, has a proximal end **212** with a shape following the contour of the most proximal stent **220** and is slightly larger in circumference than the distal circumference of the first stent graft **100**. Therefore, an insertion of the proximal end **212** of the second stent graft **200** into the distal end **114** of the first stent graft **100** results, in total, in a two-part stent graft. Because blood flows from the proximal end **112** of the first stent graft **100** to the distal end **214** of the second stent graft **200**, it is preferable to have the first stent graft **100** fit inside the second stent graft **200** to prevent blood from leaking out therebetween. This configuration can be achieved by implanting the devices in reverse order (first implant graft **200** and, then, implant graft **100**. Each of the stent grafts **100**, **200** can have its own longitudinal support member **40** as needed.

[0293] It is not significant if the stent apices of the distal-most stent of the first stent graft **100** are not aligned with the stent apices of the proximal-most stent **220** of the second stent graft **200**. What is important is the amount of junctional overlap between the two grafts **100**, **200**.

[0294] Delivery System

[0295] As set forth above, the prior art includes many different systems for endoluminally delivering a prosthesis, in particular, a stent graft, to a vessel. Many of the delivery systems have similar parts and most are guided along a guidewire that is inserted, typically, through an insertion into the femoral artery near a patient's groin prior to use of the delivery system. To prevent puncture of the arteries leading to and including the aorta, the delivery system is coaxially connected to the guidewire and tracks the course of the guidewire up to the aorta. The parts of the delivery system that will track over the wire are, therefore, sized to have an outside diameter smaller than the inside diameter of the femoral artery of the patient. The delivery system components that track over the guidewire include the stent graft and are made of a series of coaxial lumens referred to as catheters and sheaths. The stent graft is constrained, typically, by an outer catheter, requiring the stent graft to be compressed to fit inside the outer catheter. Doing so makes the portion of the delivery system that constrains the stent graft very stiff, which, therefore, reduces that portion's flexibility and makes it difficult for the delivery system to track over the guidewire, especially along curved vessels such as the aortic arch. In addition, because the stent graft exerts very high radial forces on the constraining catheter due to the amount that it must be compressed to fit inside the catheter, the process of deploying the stent graft by sliding the constraining catheter off of the stent graft requires a very high amount of force, typically referred to as a deployment force. Also, the catheter has to be strong enough to constrain the graft, requiring it to be made of a rigid material. If the rigid material is bent, such as when tracking into the aortic arch, the rigid material tends to kink, making it difficult if not impossible to deploy the stent graft.

[0296] Common features of vascular prosthesis delivery systems include a tapered nose cone fixedly connected to a guidewire lumen, which has an inner diameter substantially corresponding to an outer diameter of the guidewire such that the guidewire lumen slides easily over and along the guidewire. A removable, hollow catheter covers and holds a compressed prosthesis in its hollow and the catheter is fixedly connected to the guidewire lumen. Thus, when the prosthesis is in a correct position for implantation, the physician withdraws the hollow catheter to gradually expose the self-expanding prosthesis from its proximal end towards its distal end. When the catheter has withdrawn a sufficient distance from each portion of the expanding framework of the prosthesis, the framework can expand to its native position, preferably, a position that has a diameter at least as great as the inner diameter of the vessel wall to, thereby, tightly affix the prosthesis in the vessel When the catheter is entirely withdrawn from the prosthesis and, thereby, allows the prosthesis to expand to the diameter of the vessel, the prosthesis is fully expanded and connected endoluminally to the vessel along the entire extent of the prosthesis, e.g., to treat a dissection. When treating an aneurysm, for example, the prosthesis is in contact with the vessel's proximal and distal landing zones when completely released from the catheter. At such a point in the delivery, the delivery system can be withdrawn from the patient. The prosthesis, however, cannot be reloaded in the catheter if implantation is not optimal.

[0297] The aorta usually has a relatively straight portion in the abdominal region and in a lower part of the thoracic region. However, in the upper part of the thoracic region, the aorta is curved substantially, traversing an upside-down U-shape from the back of the heart over to the front of the heart. As explained above, prior art delivery systems are relatively hard and inflexible (the guidewire/catheter portion of the prior art delivery systems). Therefore, if the guidewire/catheter must traverse the curved portion of the aorta, it will kink as it is curved or it will press against the top portion of the aortic curve, possibly puncturing the aorta if the diseased portion is located where the guidewire/catheter is exerting its force. Such a situation must be avoided at all costs because the likelihood of patient mortality is high. The prior art does not provide any way for substantially reducing the stress on the curved portion of the aorta or for making the guidewire/catheter sufficiently flexible to traverse the curved portion without causing damage to the vessel.

[0298] The present invention, however, provides significant features not found in the prior art that assist in placing a stent graft in a curved portion of the aorta in a way that substantially reduces the stress on the curved portion of the aorta and substantially reduces the insertion forces needed to have the compressed graft traverse the curved portion of the aorta. As set forth above, the longitudinal support member **40** is pre-formed in a desired spiral/helical shape before being attached to the graft sleeve **10** and, in an exemplary embodiment, is curved in a patient-customized way to accommodate the anticipated curve of the actual vessel in which the graft will be implanted. As such, optimal positioning of the stent graft **1** occurs when the longitudinal support member **40** is placed substantially at the superior longitudinal surface line of the curved aorta (with respect to anatomical position). Such placement can be effected in two ways. First, the stent graft **1**, the support member **40**, or any portion of the delivery system that is near the target site can be provided with radiopaque markers that are monitored by the physician and used to manually align the support member **40** in what is perceived as an optimal position. The success of this alignment technique, however, is dependent upon the skill of the physician. Second, the delivery system can be made to automatically align the support member **40** at the optimal position. No such system existed in the prior art. However, the delivery system of the present invention provides such an alignment device, thereby, eliminating the need for physician guesswork as to the three-dimensional rotational position of the implanted stent graft **1**. This alignment device is explained in further detail below with respect to FIGS. **64** to **67**.

[0299] The delivery system of the present invention also has a very simple to use handle assembly. The handle assembly takes advantage of the fact that the inside diameter of the aorta is substantially larger that the inside diameter of the femoral arteries. The present invention, accordingly, uses a two-stage approach in which, after the device is inserted in through the femoral artery and tracks up into the abdominal area of the aorta (having a larger diameter (see FIG. **19**) than the femoral artery), a second stage is deployed (see FIG. **20**) allowing a small amount of expansion of the stent graft while still constrained in a sheath; but this sheath, made of fabric/woven polymer or similar flexible material, is very flexible. Such a configuration gives the delivery system greater flexibility for tracking, reduces deployment forces because of the larger sheath diameter, and easily overcome kinks because the sheath is made of fabric.

[0300] To describe the delivery system of the present invention, the method for operating the delivery assembly **600** will be described first in association with FIGS. **10**, **11**, and **12**. Thereafter, the individual components will be described to allow a better understanding of how each step in the process is effected for delivering the stent graft **1** to any portion of the aorta **700** (see FIGS. **19** to **24**), in particular, the curved portion **710** of the aorta.

[0301] Initially, the distal end **14** of the stent graft **1** is compressed and placed into a hollow, cup-shaped, or tubular-shaped graft holding device, in particular, the distal sleeve **644** (see, e.g., FIG. **25**). At this point, it is noted that the convention for indicating direction with respect to delivery systems is opposite that of the convention for indicating direction with respect to stent grafts. Therefore, the proximal direction of the delivery system is that portion closest to the user/physician employing the system and the distal direction corresponds to the portion farthest away from the user/physician, i.e., towards the distal-most nose cone **632**.

[0302] The distal sleeve **644** is fixedly connected to the distal end of the graft push lumen **642**, which lumen **642** provides an end face for the distal end **14** of the stent graft **1**. Alternatively, the distal sleeve **644** can be removed entirely. In such a configuration, as shown in FIG. **12**, for example, the proximal taper of the inner sheath **652** can provide the measures for longitudinally holding the compressed distal end of the graft **1**. If the sleeve **644** is removed, it is important to prevent the distal end **14** of the stent graft **1** from entering the space between the interior surface of the hollow sheath lumen **654** and the exterior surface of the graft push lumen **642** slidably disposed in the sheath lumen **654**. Selecting a radial thickness of the space to be less than the diameter of the wire making up the stent **20**, **30** (in particular, no greater than half a diameter thereof) insures reliable movement of the distal end **14** of the stent graft **1**. In another alternative configuration shown in FIG. **68**, the distal sleeve **644** can be a disk-shaped buttress **644** present at the distal end of the graft push lumen

642. An example configuration can provide the buttress 644 with a hollow proximal insertion peg 6442, a hollow distal stiffening tube 6444, and an intermediate buttress wall 6446. The buttress 644 is concentric to the center axis of the delivery system 600 and allows the co-axial guidewire lumen 620 and apex release lumen 640 to pass therethrough. The peg 6442 allows for easy connection to the graft push lumen 643. The stiffening tube 64 creates a transition in stiffness from the graft push lumen 642 to the apex release lumen 620 and guidewire lumen 640 and provides support to the lumen 620, 640 located therein. Such a transition in stiffness reduces any possibility of kinking at the distal end of the graft push lumen 642 and aids in transferring force from the graft push lumen 642 to the lumen therein 620, 640 when all are in a curved orientation. The buttress wall 6446 provides a flat surface that will contact the distal-end-facing side of the stent graft 1 and can be used to push the stent graft distally when the graft push lumen 642 is moved distally. The alternative configuration of the buttress 644 insures that the stent graft 1 does not become impinged within the graft push lumen 642 and the lumen therein 620, 640 when these components are moved relative to each other.

[0303] As set forth in more detail below, each apex 32 of the bare stent 30 is, then, loaded into the apex capture device 634 so that the stent graft 1 is held at both its proximal and distal ends. The loaded distal end 14, along with the distal sleeve 644 and the graft push lumen 642, are, in turn, loaded into the inner sheath 652, thus, further compressing the entirety of the stent graft 1. The captured bare stent 30, along with the nose cone assembly 630 (including the apex capture device 634), is loaded until the proximal end of the nose cone 632 rests on the distal end of the inner sheath 652. The entire nose cone assembly 630 and sheath assembly 650 is, then, loaded proximally into the rigid outer catheter 660, further compressing the stent graft 1 (resting inside the inner sheath 652) to its fully compressed position for later insertion into a patient. See FIG. 63.

[0304] The stent graft 1 is, therefore, held both at its proximal and distal ends and, thereby, is both pushed and pulled when moving from a first position (shown in FIG. 19 and described below) to a second position (shown in FIG. 21 and described below). Specifically, pushing is accomplished by the non-illustrated interior end face of the hollow distal sleeve 644 (or the taper 653 of the inner sheath 652) and pulling is accomplished by the hold that the apex capture device 634 has on the apices 32 of the bare stent 30.

[0305] The assembly 600 according to the present invention tracks along a guidewire 610 already inserted in the patient and extending through the aorta and up to, but not into, the left ventricle of the heart 720. Therefore, a guidewire 610 is inserted through the guidewire lumen 620 starting from the nose cone assembly 630, through the sheath assembly 650, through the handle assembly 670, and through the apex release assembly 690. The guidewire 610 extends out the proximal-most end of the assembly 600. The guidewire lumen 620 is coaxial with the nose cone assembly 630, the sheath assembly 650, the handle assembly 670, and the apex release assembly 690 and is the innermost lumen of the assembly 600 immediately surrounding the guidewire 610.

[0306] Before using the delivery system assembly 600, all air must be purged from inside the assembly 600. Therefore, a liquid, such as sterile U.S.P. saline, is injected through a non-illustrated tapered luer fitting to flush the guidewire lumen at a non-illustrated purge port located near a proximal end of the guidewire lumen. Second, saline is also injected through the luer fitting 612 of the lateral purge-port (see FIG. 11), which liquid fills the entire internal co-axial space of the delivery system assembly 600. It may be necessary to manipulate the system to facilitate movement of the air to be purged to the highest point of the system.

[0307] After purging all air, the system can be threaded onto the guidewire and inserted into the patient. Because the outer catheter 660 has a predetermined length, the fixed front handle 672 can be disposed relatively close to the entry port of the femoral artery. It is noted, however, that the length of the outer catheter 660 is sized such that it will not have the fixed proximal handle 672 directly contact the entry port of the femoral artery in a patient who has the longest distance between the entry port and the thoracic/abdominal junction 742, 732 of the aorta expected in a patient (this distance is predetermined). Thus, the delivery assembly 600 of the present invention can be used with typical anatomy of the patient. Of course, the assembly 600 can be sized to any usable length.

[0308] The nose cone assembly 630 is inserted into a patient's femoral artery and follows the guidewire 610 until the nose cone 632 reaches the first position at least to a level of the celiac axis and possibly further but not into the intended stent graft deployment site, which would prevent deployment of at least the downstream end of the stent graft. The first position is shown in FIG. 19. The nose cone assembly 630 is radiopaque, whether wholly or partially, to enable the physician to determine fluoroscopically, for example, that the nose cone assembly 630 is in the first position. For example, the nose cone 632 can have a radiopaque marker 631 anywhere thereon or the nose cone 632 can be entirely radiopaque.

[0309] FIGS. 19 to 24 illustrate the catheter 660 extending approximately up to the renal arteries. However, the catheter 660 of the present invention is configured to travel up to at least the celiac axis (not shown in FIGS. 19 to 24). As used herein, the celiac axis is to be defined according to common medical terms. In a simplistic definition, the celiac axis is a plane that intersects and is parallel to a central axis of a patient's celiac at the intersection of the celiac and the aorta and, therefore, this plane is approximately orthogonal to the longitudinal axis of the abdominal/thoracic aorta at the point where the celiac intersects the aorta. Therefore, with respect to extension of the catheter 660 into the aorta, it is extended into the aorta up to but not past the intended downstream end of the implant. After arriving at this distal-most position, the distal end of the catheter 660 remains substantially steady along the longitudinal axis of the aorta until after the stent graft 1 is implanted (see FIG. 24) and the entire delivery system is to be removed from the patient. While the delivery system of the present invention can be retracted in the orientation shown in FIG. 24 except for one difference (the bare stent 32 is open and the apex release device 634 is released from compressing the bare stent 32), the preferred embodiment for removal of the catheter 660 from the aorta after implantation of the stent graft 1 occurs with reference to the condition shown In FIG. 19—all of the interior lumens 620, 640, 642, 654 are retracted inside the catheter 660 and the nose cone 631 is in contact with the distal end of the catheter 660.

[0310] After the nose cone assembly 630 is in the first position shown in FIG. 19, the locking knob or ring 676 is placed from its neutral position into its advancement position. As will be described below, placing the locking knob 676 into

its advancement position A allows both the nose cone assembly **630** and the internal sheath assembly **650** to move as one when the proximal handle **678** is moved in either the proximal or distal directions because the locking knob **676** radially locks the graft push lumen **642** to the lumens of the apex release assembly **690** (including the guidewire lumen **620** and an apex release lumen **640**). The locking knob **676** is fixedly connected to a sheath lumen **654**.

[0311] Before describing how various embodiments of the handle assembly **670** function, a summary of the multi-lumen connectivity relationships, throughout the neutral, advancement, and deployment positions, is described.

[0312] When the locking ring is in the neutral position, the pusher clasp spring **298** shown in FIG. **48** and the distal clasp body spring **606** shown in FIG. **52** are both disengaged. This allows free movement of the graft push lumen **642** with the guidewire lumen **620** and the apex release lumen **640** within the handle body **674**.

[0313] When the locking knob **676** is moved into the advancement position, the pusher clasp spring **298** shown in FIG. **48** is engaged and the distal clasp body spring **606** shown in FIG. **52** is disengaged. The sheath lumen **654** (fixedly attached to the inner sheath **652**) is, thereby, locked to the graft push lumen **642** (fixedly attached to the distal sleeve **644**) so that, when the proximal handle **678** is moved toward the distal handle **672**, both the sheath lumen **654** and the graft push lumen **642** move as one. At this point, the graft push lumen **642** is also locked to both the guidewire lumen **620** and the apex release lumen **640** (which are locked to one another through the apex release assembly **690** as set forth in more detail below). Accordingly, as the proximal handle **678** is moved to the second position, shown with dashed lines in FIG. **11**, the sheath assembly **650** and the nose cone assembly **630** progress distally out of the outer catheter **660** as shown in FIGS. **20** and **21** and with dashed lines in FIG. **11**.

[0314] At this point, the sheath lumen **654** needs to be withdrawn from the stent graft **1** to, thereby, expose the stent graft **1** from its proximal end **12** to its distal end **14** and, ultimately, entirely off of its distal end **14**. Therefore, movement of the locking knob **676** into the deployment position D will engage the distal clasp body spring **606** shown in FIG. **52** and disengage the pusher clasp spring **298** shown in FIG. **48**. Accordingly, the graft push lumen **642** along with the guidewire lumen **620** and the apex release lumen **640** are locked to the handle body **674** so as not to move with respect to the handle body **674**. The sheath lumen **654** is unlocked from the graft push lumen **642**. Movement of the distal handle **678** back to the third position (proximally), therefore, pulls the sheath lumen **654** proximally, thus, proximally withdrawing the inner sheath **652** from the stent graft **1**.

[0315] At this point, the delivery assembly **600** only holds the bare stent **30** of the stent graft **1**. Therefore, final release of the stent graft **1** occurs by releasing the bare stent **30** from the nose cone assembly **630**, which is accomplished using the apex release assembly **690** as set forth below.

[0316] In order to explain how the locking and releasing of the lumen occur as set forth above, reference is made to FIGS. **33** to **62**.

[0317] FIG. **33** is a cross-sectional view of the proximal handle **678** and the locking knob **676**. A pusher clasp rotator **292** is disposed between a clasp sleeve **614** and the graft push lumen **642**. A specific embodiment of the pusher clasp rotator **292** is illustrated in FIGS. **34** through **39**. Also disposed between the clasp rotator **292** and the graft push lumen **642** is a rotator body **294**, which is directly adjacent the graft push lumen **642**. A specific embodiment of the rotator body **294** is illustrated in FIGS. **40** through **43**. Disposed between the rotator body **294** and the sheath lumen **654** is a pusher clasp body **296**, which is fixedly connected to the rotator body **294** and to the locking knob **676**. A specific embodiment of the pusher clasp body **296** is illustrated in FIGS. **44** through **46**. A pusher clasp spring **298** operatively connects the pusher clasp rotator **292** to the rotator body **294** (and, thereby, the pusher clasp body **296**).

[0318] An exploded view of these components is presented in FIG. **48**, where an O-ring **293** is disposed between the rotator body **294** and the pusher clasp body **296**. As shown in the plan view of FIG. **47**, a crimp ring **295** connects the sheath lumen **654** to the distal projection **297** of the pusher clasp body **296**. A hollow handle body **674** (see FIGS. **10**, **11**, and **33**), on which the proximal handle **678** and the locking knob **676** are slidably mounted, holds the pusher clasp rotator **292**, the rotator body **294**, the pusher clasp body **296**, and the pusher clasp spring **298** therein. This entire assembly is rotationally mounted to the distal handle **672** for rotating the stent graft **1** into position (see FIGS. **23** and **24** and the explanations thereof below). A specific embodiment of the handle body **674** is illustrated in FIG. **49**.

[0319] A setscrew **679** extends from the proximal handle **678** to contact a longitudinally helixed groove in the pusher clasp rotator **292** (shown in FIGS. **36** and **38**). Thus, when moving the proximal handle **678** proximally or distally, the pusher clasp rotator **292** rotates clockwise or counter-clockwise.

[0320] An alternative embodiment of the locking knob **676** is shown in FIGS. **50** et seq. in which, instead of applying a longitudinal movement to rotate the pusher clasp spring **298** through the cam/follower feature of the proximal handle **678** and pusher clasp rotator **292**, a rotating locking knob **582** is located at the proximal end of the handle body **674**. The knob **582** has three positions that are clearly shown in FIG. **51**: a neutral position N, an advancement position A, and a deployment position D. The functions of these positions N, A, D correspond to the positions N, A, D of the locking knob **676** and the proximal handle **678** as set forth above.

[0321] In the alternative embodiment, a setscrew or pin **584** is threaded into the clasp sleeve **614** through a slot **675** in the handle body **674** and through a slot **583** in the knob **582** to engage the locking knob **582**. The depth of the pin **584** in the clasp sleeve **614** is small because of the relatively small thickness of the clasp sleeve **614**. To provide additional support to the pin **584** and prevent it from coming out of the clasp sleeve **614**, an outer ring **6144** is disposed on the exterior surface of the proximal end of the clasp sleeve **614**. Because of the x-axis orientation of the slot **583** in the knob **582** and the y-axis orientation of the slot **675** in the handle body **674**, when the knob **582** is slid over the end of the handle body **674** and the setscrew **584** is screwed into the clasp sleeve **614**, the knob **582** is connected fixedly to the handle body **674**. When the locking knob **582** is, thereafter, rotated between the neutral N, advancement A, and deployment D positions, the clasp sleeve **614** rotates to actuate the spring lock (see FIGS. **48** and **52**).

[0322] A setscrew **586**, shown in FIG. **53**, engages a groove **605** in the proximal clasp assembly **604** to connect the proximal clasp assembly **604** to the clasp sleeve **614** but allows the clasp sleeve **614** to rotate around the clasp body **602**. The clasp sleeve **614** is shown in FIGS. **50** and **53** and, in particu-

lar, in FIGS. **59** to **62**. The proximal clasp assembly **604** of FIG. **53** is more clearly shown in the exploded view of FIG. **52**. The proximal clasp assembly **604** is made of the components including a distal clasp body spring **606**, a locking washer **608**, a fastener **603** (in particular, a screw fitting into internal threads of the proximal clasp body **602**), and a proximal clasp body **602**. The proximal clasp body **602** is shown, in particular, in FIGS. **54** through **58**. The proximal clasp assembly **604** is connected fixedly to the handle body **674**, preferably, with a screw **585** shown in FIG. **50** and hidden from view in FIG. **51** under knob **582**.

[0323] The handle body **674** has a position pin **592** for engaging in position openings at the distal end of the locking knob **582**. The position pin **592** can be a setscrew that only engages the handle body **674**. When the locking knob **582** is pulled slightly proximally, therefore, the knob can be rotated clockwise or counter-clockwise to place the pin **592** into the position openings corresponding to the advancement A, neutral N, and deployment D positions.

[0324] As shown in FIG. **18**, to begin deployment of the stent graft **1**, the user/physician grasps both the distal handle **672** and the proximal handle **678** and slides the proximal handle **678** towards the distal handle **672** in the direction indicated by arrow A. This movement, as shown in FIGS. **19** to **21**, causes the flexible inner sheath **652**, holding the compressed stent graft **1** therein, to emerge progressively from inside the outer catheter **660**. Such a process allows the stent graft **1**, while constrained by the inner sheath **652**, to expand to a larger diameter shown in FIG. **12**, this diameter being substantially larger than the inner diameter of the outer catheter **660** but smaller than the inner diameter of the vessel in which it is to be inserted. Preferably, the outer catheter **660** is made of a polymer (co-extrusions or teflons) and the inner sheath **652** is made of a material, such as a fabric/woven polymer or other similar material. Therefore, the inner sheath **652** is substantially more flexible than the outer catheter **660**.

[0325] It is noted, at this point, that the inner sheath **652** contains a taper **653** at its proximal end, distal to the sheath's **652** connection to the sheath lumen **654** (at which connection the inner sheath **652** has a similar diameter to the distal sleeve **644** and works in conjunction with the distal sleeve **644** to capture the distal end **14** of the stent graft **1**. The taper **653** provides a transition that substantially prevents any kinking of the outer catheter **660** when the stent graft **1** is loaded into the delivery assembly **600** (as in the position illustrated in FIGS. **10** and **11**) and, also, when the outer catheter **660** is navigating through the femoral and iliac vessels. One specific embodiment of the sheath lumen **654** has a length between approximately 30 and approximately 40 inches, in particular, 36 inches, an outer diameter of between approximately 0.20 and approximately 0.25 inches, in particular 0.238 inches, and an inner diameter between approximately 0.18 and approximately 0.22 inches, in particular, 0.206 inches.

[0326] When the proximal handle **678** is moved towards its distal position, shown by the dashed lines in FIG. **11**, the nose cone assembly **630** and the sheath assembly **650** move towards a second position where the sheath assembly **650** is entirely out of the outer catheter **660** as shown in FIGS. **20** and **21**. As can be seen most particularly in FIGS. **20** and **21**, as the nose cone assembly **630** and the sheath assembly **650** are emerging out of the outer catheter **660**, they are traversing the curved portion **710** of the descending aorta. The tracking is accomplished visually by viewing radiopaque markers on various portions of the delivery system and/or the stent graft **1** with fluoroscopic measures. Such markers will be described in further detail below. The delivery system can be made visible, for example, by the nose cone **630** being radiopaque or containing radiopaque materials.

[0327] It is noted that if the harder outer catheter **660** was to have been moved through the curved portion **710** of the aorta **700**, there is a great risk of puncturing the aorta **700**, and, particularly, a diseased portion **744** of the proximal descending aorta **710** because the outer catheter **660** is not as flexible as the inner sheath **652**. But, because the inner sheath **652** is so flexible, the nose cone assembly **630** and the sheath assembly **650** can be extended easily into the curved portion **710** of the aorta **700** with much less force on the handle than previously needed with prior art systems while, at the same time, imparting harmless forces to the intraluminal surface of the curved aorta **710** due to the flexibility of the inner sheath **652**.

[0328] At the second position shown in FIG. **21**, the user/physician, using fluoroscopic tracking of radiopaque markers (e.g., marker **631**) on any portion of the nose cone or on the stent graft **1** and/or sheath assemblies **630**, **650**, for example, makes sure that the proximal end **112** of the stent graft **1** is in the correct longitudinal position proximal to the diseased portion **744** of the aorta **700**. Because the entire inserted assembly **630**, **650** in the aorta **700** is still rotationally connected to the portion of the handle assembly **670** except for the distal handle **672** (distal handle **672** is connected with the outer sheath **660** and rotates independently of the remainder of the handle assembly **670**), the physician can rotate the entire inserted assembly **630**, **650** clockwise or counterclockwise (indicated in FIG. **20** by arrow B) merely by rotating the proximal handle **678** in the desired direction. Such a feature is extremely advantageous because the non-rotation of the outer catheter **660** while the inner sheath **652** is rotating eliminates stress on the femoral and iliac arteries when the rotation of the inner sheath **652** is needed and performed.

[0329] Accordingly, the stent graft **1** can be pre-aligned by the physician to place the stent graft **1** in the optimal circumferential position. FIG. **23** illustrates the longitudinal support member **40** not in the correct superior position and FIG. **24** illustrates the longitudinal support member **40** in the correct superior position. The optimal superior surface position is, preferably, near the longest superior longitudinal line along the circumference of the curved portion of the aorta as shown in FIGS. **23** and **24**. As set forth above, when the longitudinal support member **40** extends along the superior longitudinal line of the curved aorta, the longitudinal support member **40** substantially eliminates any possibility of forming a kink in the inferior radial curve of the stent graft **1** during use and also allows transmission of longitudinal forces exerted along the inside lumen of the stent graft **1** to the entire longitudinal extent of the stent graft **1**, thereby allowing the entire outer surface of the stent graft **1** to resist longitudinal migration. Because of the predefined curvature of the support member **40**, the support member **40** cannot align exactly and entirely along the superior longitudinal line of the curved aorta. Accordingly, an optimal superior surface position of the support member **40** places as much of the central portion of the support member **40** (between the two ends **47** thereof) as possible close to the superior longitudinal line of the curved aorta. A particularly desirable implantation position has the superior longitudinal line of the curved aorta intersecting the proximal half of the support member **40**—the proximal half being defined as that portion of the support member **40** located between the centerline **45** and the proximal support

member loop **47**. However, for adequate implantation purposes, the centerline **45** of the support member **40** can be as much as seventy circumferential degrees away from either side of the superior longitudinal line of the curved aorta. Adequate implantation can mean that the stent graft **1** is at least approximately aligned. When implantation occurs with the stent graft **1** being less than seventy degrees, for example, less than forty degrees, away from either side of the superior longitudinal line of the curved aorta, then it is substantially aligned.

[0330] In prior art stent grafts and stent graft delivery systems, the stent graft is, typically, provided with symmetrically-shaped radiopaque markers along one longitudinal line and at least one other symmetrically-shaped radiopaque marker disposed along another longitudinal line on the opposite side (one-hundred eighty degrees (180°)) of the stent graft. Thus, using two-dimensional fluoroscopic techniques, the only way to determine if the stent graft is in the correct rotational position is by having the user/physician rotate the stent graft in both directions until it is determined that the first longitudinal line is superior and the other longitudinal line is anterior. Such a procedure requires more work by the physician and is, therefore, undesirable.

[0331] According to an exemplary embodiment of the invention illustrated in FIGS. **27** and **28**, unique radiopaque markers **232**, **234** are positioned on the stent graft **1** to assist the user/physician in correctly positioning the longitudinal support member **40** in the correct aortic superior surface position with only one directional rotation, which corresponds to the minimal rotation needed to place the stent graft **1** in the rotationally correct position.

[0332] Specifically, the stent graft **1** is provided with a pair of symmetrically shaped but diametrically opposed markers **232**, **234** indicating to the user/physician which direction the stent graft **1** needs to be rotated to align the longitudinal support member **40** to the superior longitudinal line of the curved aorta (with respect to anatomical position). Preferably, the markers **232**, **234** are placed at the proximate end **12** of the graft sleeve **10** on opposite sides (one-hundred eighty degrees (180°)) of the graft sleeve **10**.

[0333] The angular position of the markers **232**, **234** on the graft sleeve **10** is determined by the position of the longitudinal support member **40**. In an exemplary embodiment, the support member **40** is between the two markers **232**, **234**. To explain such a position, if the marker **232** is at a 0 degree position on the graft sleeve **10** and the marker **234** is at a one-hundred eighty degree) (180°) position, then the centerline **45** of the support member **40** is at a ninety degree position. However, an alternative position of the markers can place the marker **234** ninety degrees away from the first degree **41** (see FIG. **1**). Such a positioning is dependent somewhat upon the way in which the implantation is to be viewed by the user/physician and can be varied based on other factors. Thus, the position can be rotated in any beneficial way.

[0334] Exemplary ancillary equipment in endovascular placement of the stent graft **1** is a fluoroscope with a high-resolution image intensifier mounted on a freely angled C-arm. The C-arm can be portable, ceiling, or pedestal mounted. It is important that the C-arm have a complete range of motion to achieve AP to lateral projections without moving the patient or contaminating the sterile field. Capabilities of the C-arm should include: Digital Subtraction Angiography, High-resolution Angiography, and Roadmapping.

[0335] For introduction of the delivery system into the groin access arteries, the patient is, first, placed in a sterile field in a supine position. To determine the exact target area for placement of the stent graft **1**, the C-arm is rotated to project the patient image into a left anterior oblique projection, which opens the radial curve of the thoracic aortic arch for optimal visualization without superimposition of structures. The degree of patient rotation will vary, but is usually 40 to 50 degrees. At this point, the C-arm is placed over the patient with the central ray of the fluoroscopic beam exactly perpendicular to the target area. Such placement allows for the markers **232**, **234** to be positioned for correct placement of the stent graft **1**. Failure to have the central ray of the fluoroscopic beam perpendicular to the target area can result in parallax, leading to visual distortion to the patient anatomy due to the divergence of the fluoroscopic x-ray beam, with a resultant misplacement of the stent graft **1**. An angiogram is performed and the proposed stent graft landing zones are marked on the visual monitor. Once marked, neither the patient, the patient table, nor the fluoroscopic C-arm can be moved, otherwise, the reference markers become invalid. The stent graft **1** is, then, placed at the marked landing zones.

[0336] In an exemplary embodiment, the markers **232**, **234** are hemispherical, in other words, they have the approximate shape of a "D". This shape is chosen because it provides special, easy-to-read indicators that instantly direct the user/physician to the correct placement position for the longitudinal support member **40**. FIG. **27**, for example, illustrates a plan view of the markers **232**, **234** when they are placed in the upper-most superior longitudinal line of the curved aorta. The correct position is indicated clearly because the two hemispheres have the flat diameters aligned on top of or immediately adjacent to one another such that a substantially complete circle is formed by the two hemispherically rounded portions of the markers **232**, **234**. This position is also indicated in the perspective view of FIG. **28**.

[0337] Each of FIGS. **27** and **28** have been provided with examples where the markers **232**, **234** are not aligned and, therefore, the stent graft **1** is not in the correct insertion position. For example, in FIG. **27**, two markers **232'**, **234'** indicate a misaligned counter-clockwise-rotated stent graft **1** when viewed from the plane **236** at the right end of the stent graft **1** of FIG. **23** looking toward the left end thereof and down the axis **11**. Thus, to align the markers **232'**, **234'** in the most efficient way possible (the shortest rotation), the user/physician sees that the distance between the two flat diameters is closer than the distance between the highest points of the hemispherical curves. Therefore, it is known that the two flat diameters must be joined together by rotating the stent graft **1** clockwise.

[0338] FIG. **28** has also been provided with two markers **232"**, **234"** indicating a misaligned clockwise-rotated stent graft **1** when viewed from the plane **236** at the right end of the stent graft **1** of FIG. **27** looking toward the left end thereof and down the axis **11**. Thus, to align the markers **232"**, **234"** in the most efficient way possible (the shortest rotation), the user/physician sees that the distance between the highest points of the hemispherical curves is smaller than the distance between the two flat diameters. Therefore, it is known that the two flat diameters must be joined together by rotating the stent graft **1** in the direction that the highest points of the hemispherical curves point; in other words, the stent graft **1** must be rotated counter-clockwise.

[0339] A significant advantage provided by the diametrically opposed symmetric markers **232**, **234** is that they can be used for migration diagnosis throughout the remaining life of a patient after the stent graft **1** has been placed inside the patient's body. If fluoroscopic or radiographic techniques are used any time after the stent graft **1** is inserted in the patient's body, and if the stent graft **1** is viewed from the same angle as it was viewed when placed therein, then the markers' **232**, **234** relative positions observed should give the examining individual a very clear and instantaneous determination as to whether or not the stent graft **1** has migrated in a rotational manner

[0340] The hemispherical shape of the markers **232**, **234** are only provided as an example shape. The markers **232**, **234** can be any shape that allows a user/physician to distinguish alignment and direction of rotation for alignment. For example, the markers **232**, **234** can be triangular, in particular, an isosceles triangle having the single side be visibly longer or shorter than the two equal sides.

[0341] As set forth above, alignment to the optimal implantation position is dependent upon the skill of the physician(s) performing the implantation. The present invention improves upon the embodiments having longitudinal and rotational radiopaque markers **232**, **234** and substantially eliminates the need for rotational markers. Specifically, it is noted that the guidewire **610** travels through a curve through the aortic arch towards the heart **720**. It is, therefore, desirable to pre-shape the delivery system to match the aorta of the patient.

[0342] The guidewire lumen **620** is formed from a metal, preferably, stainless steel. Thus, the guidewire lumen **620** can be deformed plastically into any given shape. In contrast, the apex release lumen **640** is formed from a polymer, which tends to retain its original shape and cannot plastically deform without an external force, e.g., the use of heat. Therefore, to effect the pre-shaping of the delivery assembly **600**, the guidewire lumen **620**, as shown in FIG. **64**, is pre-shaped with a curve at a distal-most area **622** of the lumen **620**. The pre-shape can be determined, for example, using the fluoroscopic pre-operative techniques described above, in which the guidewire lumen **620** can be customized to the individual patient's aortic shape. Alternatively, the guidewire lumen **620** can be pre-shaped in a standard manner that is intended to fit an average patient. Another alternative is to provide a kit that can be used to pre-shape the guidewire lumen **620** in a way that is somewhat tailored to the patient, for example, by providing a set of delivery systems **600** or a set of different guidewire lumens **620** that have different radii of curvature.

[0343] With the pre-curved guidewire lumen **620**, when the nose cone **632** and inner sheath **652** exit the outer catheter **660** and begin to travel along the curved guidewire **610**, the natural tendency of the pre-curved guidewire lumen **620** will be to move in a way that will best align the two curves to one another (see FIGS. **20** and **21**). The primary factor preventing the guidewire lumen **620** from rotating itself to cause such an alignment is the torque generated by rotating the guidewire lumen **620** around the guidewire **610**. The friction between the aorta and the device also resists rotational motion. The delivery system **600**, however, is configured naturally to minimize such torque. As set forth above with respect to FIGS. **15** to **17**, the guidewire lumen **620** freely rotates within the apex release lumen **640** and is only connected to the apex release lumen **640** at the proximal-most area of both lumen **620**, **640**. While the inner sheath **652** advances through the aortic arch, the two lumen **620**, **640** are rotationally connected only at the apex release assembly **690**. This means that rotation of the guidewire lumen **620** about the guidewire **610** and within the apex release lumen **640** occurs along the entire length of the guidewire lumen **620**. Because the metallic guidewire lumen **620** is relatively rotationally elastic along its length, rotation of the distal-most portion (near the nose cone assembly **630**) with respect to the proximal-most portion (near the apex release assembly **690**) requires very little force. In other words, the torque resisting rotation of the distal-most portion to conform to the curve of the guidewire **610** is negligible. Specifically, the torque is so low that the force resisting the alignment of the guidewire lumen **620** to the guidewire **610** causes little, negligible, or no damage to the inside of the aorta, especially to a dissecting inner wall of a diseased aorta.

[0344] Due to the configuration of the delivery system **600** of the present invention, when the guidewire lumen **620** is extended from the outer catheter **660** (along with the apex release lumen **640**, the stent graft **1**, the inner sheath **652** as shown in FIGS. **20** and **21**, for example), the pre-shape of the guidewire lumen **620** causes automatic and natural rotation of the entire distal assembly—including the stent graft **1**—along its longitudinal axis. This means that the length and connectivity of the guidewire lumen **620**, and the material from of which the guidewire lumen **620** is made, allow the entire distal assembly (**1**, **620**, **630**, **640**, **650**) to naturally rotate and align the pre-curved guidewire lumen **620** with the curve of the guidewire **610**—this is true even if the guidewire lumen **620** is inserted into the aorta entirely opposite the curve of the aorta (one-hundred eighty degrees (180°)). In all circumstances, the curved guidewire lumen **620** will cause rotation of the stent graft **1** into an optimal implantation position, that is, aligning the desired portion of the support member **40** within ±70 degrees of the superior longitudinal line of the curved aorta. Further, the torque forces acting against rotation of the guidewire lumen **620** will not be too high to cause damage to the aorta while carrying out the rotation.

[0345] The self-aligning feature of the invention begins with a strategic loading of the stent graft **1** in the inner sleeve **652**. To describe the placement of the supporting member **40** of the stent graft **1** relative to the curve **622** of the guidewire lumen **620**, an X-Y coordinate curve plane is defined and shown in FIG. **64**. In particular, the guidewire lumen **620** is curved and that curve **622** defines the curve plane **624**.

[0346] To insure optimal implantation, when loading the stent graft **1** into the inner sheath **652**, a desired point on the supporting member **40** between the centerline **45** of the stent graft **1** and the proximal support member loop **47** is aligned to intersect the curve plane **624**. An exemplary, but not required, location of the desired point on the supporting member **40** is located forty-five (45) degrees around the circumference of the stent graft **1** shown in FIG. **1** beginning from the first degree **41** in line with the proximal support member loop **47**. When the stent graft **1** is loaded in an exemplary orientation, it is ready for insertion into the inner sleeve **652**. During the loading process, the stent graft **1** and the guidewire lumen **620** are held constant rotationally. After such loading, the inner sleeve **652** is retracted into the outer catheter **660** and the delivery system **600** is ready for purging with saline and use with a patient.

[0347] FIGS. **65** to **67** illustrate self-alignment of the distal assembly **620**, **630**, **640**, **650** after it is pushed out from the distal end of the outer catheter **660** (see FIGS. **20** and **21**). FIG. **65** shows an aorta **700** and the distal assembly after it has traversed the iliac arteries **802** and enters the descending

thoracic portion **804** of the aorta. The nose cone assembly **630** is positioned just before the aortic arch **806** and the stent graft **1** is contained within the inner sheath **652**. A reference line **820** is placed on the stent graft **1** at a longitudinal line of the stent graft **1** that is intended to align with the superior longitudinal line **808** (indicated with dashes) of the aortic arch **806**. In FIG. **65**, the reference line **820** also lies on the curved plane **624** defined by the pre-curved guidewire lumen **620**. As can be clearly seen from FIG. **65**, the reference line **820** is positioned almost on or on the inferior longitudinal line of the curved aorta—thus, the stent graft **1** is one-hundred eighty degrees (180°)) out of alignment. FIG. **66** shows the nose cone assembly **630** fully in the aortic arch **806** and the inner sleeve **652** at the entrance of the aortic arch **806**. With the self-aligning configuration of the pre-curved guidewire lumen **620**, movement of the distal assembly from the position shown in FIG. **65** to the position shown in FIG. **66** causes a rotation of the reference line **820** almost ninety degrees (90°) clockwise (with respect to a view looking upward within the descending aorta) towards the superior longitudinal line **808**. In FIG. **67**, the nose cone assembly **630** has reached, approximately, the left subclavian artery **810**. Rotational movement of the distal assembly is, now, complete, with the reference line **820** almost aligned with the superior longitudinal line **808** of the aortic arch **806**. From the views of FIGS. **65** to **67**, also shown is the fact that the pre-curved guidewire lumen **620** has not caused any portion of the inner sleeve **652** to push against the inner surface of the aortic arch **806** with force—force that might exacerbate an aortic dissection.

[0348] It is noted that the guidewire lumen **620** need not be rotationally fixedly connected to the apex release lumen **640** when the apex release assembly **690** is in the locked position shown in FIGS. **15** and **16**. Instead, a non-illustrated, freely rotatable coupling can be interposed anywhere along the guidewire lumen **620** (but, preferably, closer to the apex release assembly **690**). This coupling would have a proximal portion rotationally fixedly connected to the to the apex release lumen **640** when the apex release assembly **690** is in the locked position shown in FIGS. **15** and **16** and a freely-rotatable distal portion that is fixedly connected to all of the guidewire lumen **620** disposed distal thereto. Thus, the guidewire lumen **620** near the sheath assembly **650** will always be freely rotatable and, thereby, allow easy and torque-free rotation of the guidewire lumen **620** about the guidewire **610**.

[0349] It is also noted that the pre-curved section **622** of the guidewire lumen need not be made at the manufacturer. As shown in FIG. **69**, a curving device can be provided with the delivery system **600** to allow the physician performing the implantation procedure to tailor-fit the curve **622** to the actual curve of the vessel in which the stent graft **1** is to be implanted. Because different patients can have different aortic arch curves, a plurality of these curving devices can be provided with the delivery system **600**, each of the curving devices having a different curved shape. Each device can also have two sides with each side having a different curved shape, thus, reducing the number of devices if a large number of curves are required. Further, the curving devices can all be rotationally connected on a common axle or spindle for each of transport, storage, and use.

[0350] For tailoring the curve to the patient's curved vessel, the physician can, for example, fluoroscopically view the vessel (e.g., aortic arch) and determine therefrom the needed curve by, for example, holding up the curving device to the display. Any kind of curving device can be used to impart a bend to the guidewire lumen **620** when the guidewire lumen **620** is bent around the circumference.

[0351] Because of the predefined curvature of the support member **40**, the support member **40** cannot align exactly and entirely along the superior longitudinal line of the curved aorta. Accordingly, an optimal superior surface position of the support member **40** places as much of the central portion of the support member **40** (between the two ends **47** thereof) as possible close to the superior longitudinal line **808** of the curved aorta. A particularly desirable implantation position has the superior longitudinal line **808** of the curved aorta intersecting the proximal half of the support member **40**—the proximal half being defined as that portion of the support member **40** located between the centerline **45** and the proximal support member loop **47**. However, for adequate implantation purposes, the centerline **45** of the support member **40** can be as much as seventy circumferential degrees away from either side of the superior longitudinal line of the curved aorta.

[0352] When the stent graft **1** is in place both longitudinally and circumferentially (FIG. **21**), the stent graft **1** is ready to be removed from the inner sheath **652** and implanted in the vessel **700**. Because relative movement of the stent graft **1** with respect to the vessel is no longer desired, the inner sheath **652** needs to be retracted while the stent graft **1** remains in place, i.e., no longitudinal or circumferential movement. Such immovability of the stent graft **1** is insured by, first, the apex capture device **634** of the nose cone assembly **630** holding the front of the stent graft **1** by its bare stent **30** (see FIGS. **13**, **22**, and **23**) and, second, by unlocking the locking knob **676**/placing the locking ring/knob in the D position—which allows the sheath lumen **654** to move independently from the guidewire lumen **620**, apex release lumen **640**, and graft push lumen **642**. The apex capture device **634**, as shown in FIGS. **13**, **14**, **30** and **311** (and as will be described in more detail below), is holding each individual distal apex **32** of the bare stent **30** in a secure manner—both rotationally and longitudinally.

[0353] The nose cone assembly **630**, along with the apex capture device **634**, is securely attached to the guidewire lumen **620** (and the apex release lumen **640** at least until apex release occurs). The inner sheath **652** is securely attached to a sheath lumen **654**, which is coaxially disposed around the guidewire lumen **620** and fixedly attached to the proximal handle **678**. The stent graft **1** is also supported at its distal end by the graft push lumen **642** and the distal sleeve **644** or, the taper **653** of the inner sheath **652**. (The entire coaxial relationship of the various lumens **610**, **620**, **640**, **642**, **654**, and **660** is illustrated for exemplary purposes only in FIG. **25**, and a portion of which can also be seen in the exploded view of the handle assembly in FIG. **50**) Therefore, when the proximal handle **678** is moved proximally with the locking knob **676** in the deployment position D, the sheath lumen **654** moves proximally as shown in FIGS. **13**, **22**, and **23**, taking the sheath **652** proximally along with it while the guidewire lumen **620**, the apex release lumen **640**, the graft push lumen **642**, and the distal sleeve **644** remain substantially motionless and, therefore, the stent graft **1** remains both rotationally and longitudinally steady.

[0354] The stent graft **1** is, now, ready to be finally affixed to the aorta **700**. To perform the implantation, the bare stent **30** must be released from the apex capture device **634**. As will be

described in more detail below, the apex capture device **634** shown in FIGS. **13**, **14**, and **29** to **32**, holds the proximal apices **32** of the bare stent **30** between the distal apex head **636** and the proximal apex body **638**. The distal apex head **636** is fixedly connected to the guidewire lumen **620**. The proximal apex body **638**, however, is fixedly connected to the apex release lumen **640**, which is coaxial with both the guidewire lumen **620** and the sheath lumen **654** and disposed therebetween, as illustrated diagrammatically in FIG. **25**. (As will be described in more detail below, the graft push lumen **642** is also fixedly connected to the apex release lumen **640**.) Therefore, relative movement of the apex release lumen **640** and the guidewire lumen **620** separates the distal apex head **636** and a proximal apex body **638** from one another.

[0355] To cause such relative movement, the apex release assembly **690** has, in an exemplary embodiment, three parts, a distal release part **692**, a proximal release part **694**, and an intermediate part **696** (which is shown in the form of a clip in FIGS. **16** and **26**). To insure that the distal apex head **636** and the proximal apex body **638** always remain fixed with respect to one another until the bare stent **30** is ready to be released, the proximal release part **694** is formed with a distal surface **695**, the distal release part **692** is formed with a proximal surface **693**, and the intermediate part **696** has proximal and distal surfaces corresponding to the surfaces **695**, **693** such that, when the intermediate part **696** is inserted removably between the distal surface **695** and the proximal surface **693**, the intermediate part **696** fastens the distal release part **692** and the proximal release part **694** with respect to one another in a form-locking connection. A form-locking connection is one that connects two elements together due to the shape of the elements themselves, as opposed to a force-locking connection, which locks the elements together by force external to the elements. Specifically, as shown in FIG. **26**, the clip **696** surrounds a distal plunger **699** of the proximal release part **694** that is inserted slidably within a hollow **698** of the distal release part **692**. The plunger **699** of the proximal release part **694** can slide within the hollow **698**, but a stop **697** inside the hollow **698** prevents the distal plunger **699** from withdrawing from the hollow **698** more than the longitudinal span of the clip **696**.

[0356] To allow relative movement between the distal apex head **636** and the proximal apex body **638**, the intermediate part **696** is removed easily with one hand and, as shown from the position in FIG. **16** to the position in FIG. **17**, the distal release part **692** and the proximal release part **694** are moved axially towards one another (preferably, the former is moved towards the latter). Such movement separates the distal apex head **636** and the proximal apex body **638** as shown in FIG. **14**. Accordingly, the distal apices **32** of the bare stent **30** are free to expand to their natural position in which the bare stent **30** is released against the vessel **700**.

[0357] Of course, the apex release assembly **690** can be formed with any kind of connector that moves the apex release lumen **640** and the guidewire lumen **620** relative to one another. In an exemplary alternative embodiment, for example, the intermediate part **696** can be a selectable lever that is fixedly connected to either one of the distal release part **692** or the proximal release part **694** and has a length equal to the width of the clip **696** shown in FIG. **26**. Thus, when engaged by pivoting the lever between the distal release part **692** and the proximal release part **694**, for example, the parts **692**, **694** cannot move with respect to one another and, when disengaged by pivoting the lever out from between the parts **692**, **694**, the distal release part **692** and the proximal release part **694** are free to move towards one another.

[0358] The apex capture device **634** is unique to the present invention in that it incorporates features that allow the longitudinal forces subjected on the stent graft **1** to be fully supported, through the bare stent **30**, by both the guidewire lumen **620** and apex release lumen **640**. Support occurs by providing the distal apex head **636** with a distal surface **639**—which surface **639** supports the proximal apices **32** of the bare stent **30** (shown in the enlarged perspective view of the distal apex head **636** in FIG. **29**). When captured, each proximal apex **32** of the bare stent **30** separately rests on a distal surface **639**, as more clearly shown in FIGS. **30** and **31**. The proximal spokes of the distal apex head **636** slide within the fingers of the proximal apex body **638** as these parts moves towards one another. A slight space, therefore, exists between the fingers and the outer circumferential surfaces of the spokes. To insure that the bare stent **30** does not enter this space (which would prevent a proper release of the bare stent **30** from the apex capture device **634**, a radial thickness of the space must be less than the diameter of the wire making up the bare stent **30**. Preferably, the space is no greater than half a diameter of the wire.

[0359] Having the distal surface **639** be the load-bearing surface of the proximal apices **32** ensures expansion of each and every one of the distal apices **32** from the apex release assembly **690**. The proximal surface **641** of the distal apex head **636** (see FIG. **30**) meets with the interior surfaces of the proximal apex body **638** to help carry the apex load because the apices of the bare stent **30** are captured therebetween when the apex capture device **634** is closed. Complete capture of the bare stent **30**, therefore, fully transmits any longitudinal forces acting on the bare stent **30** to both the guidewire lumen **620** and apex release lumen **640**, making the assembly much stronger. Such capture can be clearly seen in the cut-away view of the proximal apex body **638** in FIG. **31**. For release of the apices **32** of the bare stent **30**, the proximal apex body **638** moves leftward with respect to FIGS. **30** to **33** (compare FIGS. **30** and **31** with FIG. **32**). Because friction exists between the apices **32** and the "teeth" of the proximal apex body **638** when the apices **32** are captured, the apices **32** will also try to move to the left along with the proximal apex body **638** and, if allowed to do so, possibly would never clear the "teeth" to allow each apex **32** to expand. However, as the proximal apex body **638** disengages (moves in the direction of arrow C in FIG. **31**), direct contact with the distal surface **639** entirely prevents the apices **32** from sliding in the direction of arrow C along with the proximal apex body **638** to ensure automatic release of every captured apex **32** of the bare stent **30**. Because the proximal apex body **638** continues to move in the direction of arrow C, eventually the "teeth" will clear their respective capture of the apices **32** and the bare stent **30** will expand entirely. The release position of the distal apex head **636** and the proximal apex body **638** is shown in FIGS. **14** and **32**, and corresponds to the position of the apex release assembly **690** in FIG. **17**. As can be seen, tapers on the distal outer surfaces of the proximal apex body **638** further assist in the prevention of catching the proximal apices **32** of the bare stent **30** on any part of the apex capture device **634**. In this configuration, the distal surfaces **639** bear all the load upon the bare stent **30** and the fingers of the proximal apex body **638**.

[0360] Simply put, the apex capture device **634** provides support for load placed on the stent graft **1** during advance-

ment A of the inner sheath **652** and during withdrawal of the inner sheath **652** (i.e., during deployment D). Such a configuration benefits the apposition of the bare stent **30** by releasing the bare stent **30** after the entire graft sleeve **10** has been deployed, thus reducing the potential for vessel perforation at the point of initial deployment.

[0361] When the stent graft **1** is entirely free from the inner sheath **652** as shown in FIG. **24**, the proximal handle **678** is, then, substantially at or near the third position (deployment position) shown in FIG. **10**.

[0362] The stent graft **1** is, now, securely placed within the vessel **700** and the entire portion **630**, **650**, **660** of the assembly **600** may be removed from the patient.

[0363] FIGS. **70** and **71** illustrate alternative configurations of the stent graft **1** of FIG. **1**. The stent graft **1000** of FIG. **70** is similar to the stent graft **1** of FIG. **1**. The stent graft **1000** has a graft **1010** and a number of stents **1020**. The stents **1020** are attached either to the exterior or interior surfaces of the graft sleeve **1010**. Preferably, the stents **1020** are sewn to the graft **1010**. The stent graft **1000** shown in FIG. **70** has been discussed above with respect to FIG. **1**, for example, and, therefore, the discussion relevant to features already discussed will not be repeated for the sake of brevity.

[0364] FIG. **70** shows an exemplary embodiment of the curved ends **1047** of the connecting rod **1040**. In particular, the rod **1040** forms a loop (whether, polygonal, ovular, or circular) and has an end portion **1048** that continues back parallel and next to the rod **1040** for a short distance. This end portion **1048**, along with the adjacent portion of the rod **1040** allows, for example, connective stitching to cover two lengths of the rod **1040** and better secures the end portion **1048** to the graft sleeve **1010**. In such configuration, there is limited or even no chance of a sharp end of the rod **1040** to be exposed to harm the graft sleeve **1010** or the vessel wall in which the stent graft **1000** is placed.

[0365] An alternative embodiment of the stent graft **1000** is shown as stent graft **1100** in FIG. **71**. This stent graft **1100** contains a graft sleeve **1110** that completely covers the bare stent **30** shown in FIGS. **1** and **70** and is hereinafter referred to with respect to FIGS. **71** to **78** as a clasping stent **1130**. As shown particularly well in FIGS. **72** and **74**, the clasping stent **1130** is entirely covered by the graft **1110** but is not attached to the material of the graft **1110** along its entirety.

[0366] At least some of the proximal apices **1132**, preferably, at least three or four, are left unconnected to permit a releasable connection with the fingers of the proximal apex body **638** when the fingers are extended through the apex openings **1134**. Of course, in certain applications, it may be beneficial to only leave one apex **1132** unconnected. The unconnected portion of each the apices **1132** has a minimal longitudinal length of about 10 percent of the longitudinal length of the stent and a maximum longitudinal length of up to approximately 90 percent of the length of the stent. Preferably, the longitudinal length of the unconnected portion is between approximately 30 to 40 percent as shown in FIGS. **72** and **74**, which show the clasping stent **1130** sewn to the interior of the graft **1110**. For ease of comparison, FIG. **73** illustrating the proximal end of the stent graft of FIGS. **1** and **70** is included next to FIG. **74**. The unconnected portions of apices **1132** need not have the same longitudinal lengths. Depending on the application, one or some of the unconnected portions of apices **1132** can have a longitudinal length different from other ones of the unconnected portions of apices **1132**. FIG. **75**, for example, illustrates an embodiment near the maximum longitudinal length of the unconnected portion of the clasping stent **1130**.

[0367] FIGS. **76** and **77** illustrate a proximal end of the stent graft **1100** of FIG. **71** partially deployed from the flexible inner sheath **652**. As can be seen in FIG. **76**, the entire capturing assemblies of the apex capture device **634** reside inside the stent graft **1100** when the apices are captured. Only the distal-most portion of the distal apex head **636** extends out from the interior of the stent graft **1100**. With regard to the view of FIG. **77**, it can be seen that only a few of the apices **1132** of the clasping stent **1130** are actually held by the apex capture device **634**.

[0368] It is noted at this point that implantation of the stent graft **1**, **1000**, **1100** of the present invention occurs while blood is flowing from the heart of the patient. Accordingly, the stent graft **1100** cannot occlude the vessel in which it is to be implanted and, in order to do so, there must exist a lumen for passing blood throughout the time after the stent graft **1100** has partially or fully expanded within the vessel. If all of the apices **1132** of the clasping stent **1130** were held within the apex capture device **634**, then there is a possibility of occluding the vessel if the unattached portion of the apices **1132** are too short to provide such a lumen. To avoid this condition, if only some apices **1132** of the clasping stent **1130** are captured, as illustrated in FIG. **77**, then a sufficiently large lumen exists to allow blood flow through the vessel in which the stent graft is to be implanted. Alternatively, if a large percentage of the apices **1132** are left unconnected, as shown, for example, in FIG. **75**, then all of the apices **1132** can be releasably held by the apex capture device **634** while the graft sleeve **1110** remains entirely open to allow blood flow through the stent graft **1100** during the stent graft **1100** implantation process.

[0369] There exists a drawback to placing the clasping stent **1130** as the proximal stent of the stent graft **1100** because material of the graft **1110** is proximal of the clasping stent **1130**. If unsupported, this material could move disadvantageously toward the interior of the stent graft **1100** after implantation and decrease or occlude blood flow. To prevent such movement, the stent graft **1100** also includes a crown stent **1140**. Like the clasping stent **1130**, the crown stent **1140** is shown in FIGS. **71**, **72**, **74** to **76**, and **78** as being attached to the inside of the graft **1120** and, in this exemplary embodiment, is sewn to the material of the graft using the same polyester suture as the other stents. Of course, the crown stent **1140** can be attached to the exterior of the graft **1010**. In such a configuration, the crown stent **1140** augments the rigidity of the material of the graft **1120** to reduce enfolding thereof at the proximal end of the stent graft **1100**.

[0370] Alternatively and/or additionally, a non-illustrated distal crown stent can be attached to the inside or outside of the graft **1120** at the opposite distal end of the stent graft **1100**. In such a configuration, this distal crown stent **1140** augments the rigidity of the material at the distal end of the graft **1120** to reduce enfolding thereof.

[0371] The material of the graft **1120** can extend and bridge the entire distance between two proximal crown apices **1122**. It is noted, however, that, alternatively or additionally, the material of the graft **1120** may be partially cut out between crown apices **1122** of the crown stent **1140** to define a plurality of a radially distensible flange portions **1124** at the proximal end of the stent graft **1100**, as shown in FIG. **74**.

[0372] There are various advantages provided by the stent graft **1100** over the prior art. First, the clasping and crown

stents **1130**, **1140** improve the apposition of the material of the graft to the intima of the vessel in which the stent graft **1100** is placed, in particular, in the aorta. Second, by better aligning the proximal portion of the stent graft **1110** in the lumen of the arch, the clasping and crown stents **1130**, **1140** provide an improved blood-tight closure of the proximal end of the stent graft **1110** so that blood does not pass between the intima of the vasculature and the outer surface of the stent graft **1110**.

[0373] As set forth above, if the apex capture device **634** captures less than all of the apices of the clasping stent **1130**. The resulting openings allow blood flow during implantation. It is illustrated particularly well in FIGS. **1**, **13**, **14**, and **70** that the material of the graft **10** of stent graft **1**, **1000** begins only distal of the center of the bare stent **32**. In comparison, as shown in FIGS. **71** and **73**, the material of the graft **1120** begins well proximal of the proximal-most apices of the clasping stent **1130**. Thus, this embodiment allows the material of the graft **1120** to extend much further into a vessel (i.e., further into the curved arch of the aorta). Therefore, a physician can repair a vessel further upstream in the aorta than the embodiment of the stent graft **1**, **1000** of FIGS. **1** and **70**.

[0374] In the prosthesis embodiment of FIGS. **1** and **70**, there is direct contact between the metal of the bare stent **32** and the intima of the blood vessel. In contrast thereto, the configuration of the stent graft **1100** with the clasping stent **1130** places material of the graft **1120** between the metal of the clasping stent **1130** and the intima. Such a configuration provides a more atraumatic connection between the vessel and the proximal end of the stent graft **1100** than the configuration of FIGS. **1** and **70**. This advantage is especially important for treating dissections—where the intima is in a weakened condition.

[0375] FIG. **63** illustrates interaction between the catheter **660**, the inner sheath **652**, and the nose cone assembly **630** (including the nose cone **632**, the distal apex head **636**, and the proximal apex body **638**). In this illustration, first, the catheter **660** is in a proximal position that does not cover the inner sheath **652** in any way. For example, this position of the catheter **660** occurs when the inner sheath **652** has extended out of the catheter **660** as shown in FIGS. **20** and **21**.

[0376] Next, the inner sheath **652** is clearly shown in its expanded state (caused by the non-illustrated prosthesis disposed therein and expanding outward). The distal-most end of the inner sheath **652** is disposed between the distal apex head **636** and the nose cone **632**. In such an orientation, the inner sheath **652** is in the position that occurs during extension out of the catheter **660** as shown for example, in FIGS. **20** and **21**. Because the nose cone **632** screws onto the distal end of the distal apex head **636**, the distal-most end of the inner sheath **652** is releasably captured between the two parts **632**, **636** until it is removed. Retraction of the sheath lumen **654** proximally pulls the distal-most captured end of the inner sheath **652** out from the capturing interface.

[0377] Finally, the proximal apex body **638** is in a retracted position proximal of the distal apex head **636**. This orientation is for illustrative purposes only to show the interaction of the distal apex head **636** and the proximal apex body **638** because the separation would not occur in use until, as set forth above, the inner sheath **652** is fully retracted from over the stent graft **1** and the proximal apices **32** of the stent **30** have been released as shown in FIG. **14**.

[0378] FIG. **80** is a cross-section through the catheter **660**, the fingers of the proximal apex body **638**, the distal apex body **636**, the apex release lumen **640**, and the guidewire **620**. FIG. **81** is a cross-section of the distal end of the delivery system along the longitudinal axis of the delivery system. These two figures illustrate the space **662** that exists between the catheter **660** and both of the proximal apex body **638** and the distal apex body **636** to make room for the inner sheath **652** to surround the parts **636**, **638** and pass between the nose cone **632** and the distal apex head **636** and enter the pass **664** that allows the inner sheath **652** to be releasably held there as shown in FIG. **63** until it is desired to remove the inner sheath **652** therefrom.

[0379] FIG. **82** shows a distal end of the delivery system according to the invention in the orientation of FIGS. **20** and **21**, for example. The inner sheath **652** is curved and has an alternative embodiment of a D-shaped marker **234** thereon. In contrast to the configuration of two markers **234** on the stent graft **1** as shown in FIGS. **27** and **28**, there is only one marker **234** on the inner sheath **652**. As illustrated in the orientations of FIGS. **83**, **84**, and **85**, the marker **234** allows the user to see how the inner sheath **652** should be oriented prior to implantation.

[0380] FIGS. **86**, **87**, **88**, and **89** illustrate an alternative embodiment of the front handle **672** that is rotatably attached to the handle **674** and rotatably fixed to the catheter **660**.

[0381] FIGS. **90** to **119** depict another exemplary embodiment of various features of the delivery assembly **600**.

[0382] FIG. **90** shows the entire delivery assembly **600** with a portion of nose cone assembly **630** removed to reveal the distal apex head **636**.

[0383] On the proximal end of the delivery assembly **600**, the enlarged view of FIG. **91** depicts an alternative embodiment of the apex release assembly **690**. In FIG. **91**, a proximal pusher support tube **645** surrounds two coaxial lumens, the guidewire lumen **620** and the apex release lumen **640**.

[0384] The proximal pusher support tube **645** is longitudinally fixed to the proximal end of the graft push lumen **642** and has substantially the same diameter as the graft push lumen **642**. Because the proximal pusher support tube **645** is used for pushing/pulling the combination lumen **642**, **645**, and due to the fact that the proximal pusher support tube **645** only resides within the handle body or proximal thereof, the proximal pusher support tube **645** can be made of a relatively stiff material, such as stainless steel, for example. In contrast, the graft push lumen **642** needs to flex and bend when extending out of the outer catheter **660** and into vasculature. Thus, the graft push lumen **642** is made from a relatively flexible material, such as a plastic. In FIG. **91**, the proximal portion of the proximal pusher support tube **645** is cut away to reveal the features therein, including the guidewire lumen **620** and the apex release lumen **640**.

[0385] The apex release lumen **640** is axially fixed to the proximal apex body **638**. The guidewire lumen **620**, on the other hand, is axially fixed to the distal apex head **636**. Thus, distal movement of the apex release lumen **640** with respect to the guidewire lumen **620** separates the tines of the proximal apex body **638** extending over the spokes of the distal apex head **636**. To effect this relative movement, proximal and distal crimping devices **621** and **641** are respectively attached to the guidewire **620** and the apex release lumen **640**. The distal release part **692** is connected, through a non-illustrated set screw, to the distal crimping device **641**. The proximal release part **694** is connected, also through a non-illustrated set screw, to the proximal crimping device **621**. Finally, a proximal luer connector **800** is connected to the proximal-

most end of the proximal pusher support tube **645** so that all of the lumen **620**, **640**, **645** can be filled and/or drained with a liquid, such as saline.

[0386] FIG. **92** is an enlarged view of the alternative embodiment of the locking knob **582** first shown in FIGS. **50** and **51**. To better explain the features of FIG. **92**, reference is made to the separated clasp sleeve **614** of FIG. **93**, which was first depicted in FIGS. **50**, **53**, and **59** to **62**. This clasp sleeve **614** is longitudinally fixedly and rotationally freely connected to the handle body **674** through the setscrew **584** that protrudes into the slot **675** of the handle body **674**. The setscrew **584** is screwed into but not through the proximal end of the clasp sleeve as shown in FIG. **93**, for example. This setscrew **584** protrudes into the slot **675** in the handle body **674**. When so connected, the clasp sleeve **614** cannot move longitudinally with respect to the handle body **674** but can rotationally move along the arc defined by the length of the slot **675**. The setscrew **584** protrudes from the outer circumference of the handle body **674** because it enters into the longitudinal slot **583** in the locking knob **582**. Thus, the setscrew **584** also controls the longitudinal movement distance of the locking knob **582**. When the knob **582** is at rest, the setscrew **584** resides in the distal end of the slot **583** because of the bias caused by spring **607** (see FIG. **94**).

[0387] The second setscrew **592** (also referred to as a position pin) starts from the handle body **674** but does not extend inside the handle body **674**. The setscrew **592** does, however, protrude out from the handle body **674** and into the three-position slot **587** of the locking knob **582**. Thus, the setscrew **592** controls the rotation of the knob **582** within the three positions.

[0388] The third setscrew **585** is screwed through a threaded hole in the handle body **674** and into a co-axial threaded hole **6021** of the clasp body **602** until the setscrew **585** is even with the exterior surface of the handle body **674**. Thus, the setscrew **585** does not protrude from the outer circumference of the handle body **674**.

[0389] The proximal clasp assembly **604** was first illustrated in FIG. **52**. In FIG. **94**, the proximal clasp assembly **604** is illustrated with different detail. The clasp body **602** has a distal interior cavity **6023** shaped to receive therein the distal clasp body spring **606**, which is a torsion spring in this exemplary embodiment. The locking washer **608** is connected to the distal end of the clasp body **602** by a non-illustrated setscrew that, for example, runs through the bore illustrated at the **12** o'clock position on the locking washer **608** in FIG. **94**. To keep the clasp body assembly pressed into the clasp sleeve **614**, as shown in FIGS. **101** and **102** for example, a distal spring washer **605** and a proximal compression spring **607** are inserted into a proximal interior cavity **6024**. Placement of the locking knob **676** onto the handle body **674**, as shown in FIG. **92** for example, compresses the compression spring **607** between the locking knob **676** and the proximal surface of the spring washer **605** residing inside the proximal interior cavity **6023** of the clasp body **602**. This compression forces the knob **676** proximally to keep the spring **592** inside the three-position slot **675**. The spring washer **605** is present to prevent the spring **607** from binding when the locking knob **676** is rotated between the three rotational positions. The smooth surface of the washer **605** does not catch the distal end of the compression spring **607** when the spring **607** rotates.

[0390] The rotator assembly includes the pusher clasp rotator **292**, the pusher clasp spring **298**, and the rotator body **294**. These parts are first depicted in FIGS. **34** to **43** and **47** to **48** and are next depicted in FIGS. **95** and **96**. In FIG. **95**, the rotator assembly is illustrated in an exploded, unassembled state and FIG. **96** shows the assembly in an assembled state. When assembled, the two protruding ends of the pusher clasp spring **298** are respectively inserted into the longitudinal slots **2942** and **2922** of each of the rotator body **294** and the pusher clasp rotator **292**. Because the distal end of the rotator body **294** is smaller in diameter than the cavity of the pusher clasp rotator **292**, the end of the spring that fits inside the slot **2922** must be longer than the end of the spring **298** that fits inside the slot **2942** of the rotator body **294**.

[0391] The rotator body **294** is secured inside the pusher clasp rotator **292** by two dowels **2926** that are press fit through a first orifice in the clasp rotator **292** after the rotator body **294** is inside the clasp rotator **292**. These dowels **2926**, then, pass through a circumferential groove **2944** substantially without touching the walls of the groove **2944** and, then, through a second orifice in the clasp rotator **292** directly opposite the first orifice. In such a configuration, the rotator body **294** is longitudinally fixed but rotationally free inside the clasp rotator **292**. The first and second orifices and the groove **2944** are clearly shown in FIG. **113** (with the dowels **2926** removed for clarity).

[0392] FIGS. **44** to **48** illustrated the pusher clasp body **296** and its relationship with the sheath lumen **654**. FIGS. **97** and **98** further illustrate two views of the pusher clasp body **296** and its distal projection **297**. The proximal end of the sheath lumen **654** passes through the crimp ring **295** and over the distal projection **297**. Then, to secure the sheath lumen **654** to the pusher clasp body **296**, the crimp ring **295** is compressed/crimped. Such a connection both longitudinally and rotationally stabilizes the sheath lumen **654** with respect to the pusher clasp body **296**. Two pins **2962** hold the pusher clasp body **296** to the proximal handle **678** so that longitudinal movement of the proximal handle **678** translates into a corresponding longitudinal movement of the pusher clasp body **296** within the handle body **674**. These pins **2962** pass through a plug **2964**, shown in FIG. **114**, and then into the pusher clasp body **296**. The length of the pins that exist through the plug **2964** and also through the pusher clasp body **296** gives enough support to prevent movement of the handle **678** from breaking the pins **2962**, which might occur if the plug **2964** were not present.

[0393] It is noted that the conical expansion of the proximal end of the inner sheath **652** is different in FIGS. **97** and **98**. This is because the embodiment shown in FIGS. **97** and **98** illustrates an expansion portion of the inner sheath **652** that is sutured on only one side thereof Accordingly, when viewed along the suture line (as in FIG. **98**), the cone has one flat side. In contrast, when viewed in an elevation 90 degrees turned from that suture line (as in FIG. **97**), the expansion portion has a conical elevational view.

[0394] Also shown in FIG. **98** on the inner sheath **652** is a D-shaped radiopaque marker **232**. This marker **232** is enlarged in FIG. **99** and can be, for example, secured to the inner sheath **652** by three sutures, diagrammatically indicated with an "X."

[0395] FIG. **100** is an enlarged view of the distal end of the handle assembly **670** shown in FIG. **90**. This embodiment of the distal apex head **636** shows an alternative embodiment of the proximal portion that was first shown in FIG. **29**. As can be seen in the drawing, the proximal side of the distal apex head **636** is tapered. This tapered shape allows the distal apex head **636** to enter further into the interior cavity between the prongs

of the proximal apex body **638** than the distal apex head **636** shown in FIG. **29**. It is noted that the portion of the delivery system at the distal end is to be flexible so that this portion can traverse curved vessels. Thus, it is desirable for the length of the distal apex head **636** and the proximal apex body **638** (semi-rigid parts) to be as short as possible. By allowing the distal apex head **636** to travel further into the proximal apex body **638**, the longitudinal length of the two parts **636** can be shorter.

[0396] Now that the various parts of the handle assembly **670** have been shown and described separately, the interactions and orientations when assembled can now be further understood with reference to the following description and to FIGS. **101** to **105**.

[0397] FIGS. **101** to **102** show the proximal half of the handle assembly **670** from just proximal of the locking knob **676** to just distal of the distal end of the proximal handle **678** (when the handle **678** is in a proximal position). The hidden lines shown in FIG. **101** aid in the understanding of this portion. It is noted that the sheath lumen **654** is not illustrated in FIG. **101** for clarity.

[0398] FIG. **102** clearly shows the components that are involved in the proximal half of the handle assembly **670**. The handle body **674** is surrounded by the distal handle **678** and a portion of the locking knob **676**. Inside the proximal end of the handle body **674** is the clasp body **602**, which is surrounded by the proximal end of the clasp sleeve **614**. The locking washer **608** is positioned inside the clasp sleeve **614** at the distal end of the clasp body **602**.

[0399] Separated at a distance from the distal end of the locking washer **608** is the rotator assembly, which, as set forth above, is longitudinally fixed to the proximal handle **678**. The rotator assembly includes the pusher clasp rotator **292** surrounding the pusher clasp spring **298** and the rotator body **294**. The pusher clasp body **296** is disposed on the distal end of the rotator body **294** and the crimp ring **295** secures the sheath lumen **654** on the distal projection **297** of the pusher clasp body **296**.

[0400] FIG. **103** is an enlarged view of the proximal portion of FIG. **102** by the locking knob **676**. These figures show the alignment of the bores in the clasp body **602** and the locking washer **608** so that the non-illustrated setscrew can fasten the two parts to one another. Also shown in FIG. **103** is the alignment between the groove **605** for receiving therein the setscrew **586** (see FIGS. **53** and **93**) and connecting the proximal clasp assembly **604** to the clasp sleeve **614** so that the clasp sleeve **614** can still rotate around the clasp body **602**. Also visible in the enlarged view of FIG. **103** is the three coaxial lumen **620**, **640**, **645** that pass through the clasp body **602**.

[0401] Like FIG. **103**, FIG. **104** is an enlarged view of the distal portion of the handle assembly **670** around the pusher clasp rotator **292**. This view not only shows the orientations of the rotator body **294** and the pusher clasp body **296** with respect to the pusher clasp rotator **292**, but the three coaxial lumen passing therethrough are also evident. The groove **2944** for receiving the non-illustrated dowels **2926** therein is also visible in this view. As can be seen, the guidewire lumen **620** and the apex release lumen **640** each pass entirely through the pusher clasp body **296** but the proximal pusher support tube **645** ends just after the distal end of the rotator body **294** for homeostasis purposes. It is at this end point that the proximal pusher support tube **645** is connected to the graft push lumen **642**. This two-part structure of the proximal pusher support tube **645** and the graft push lumen **642** is, in an exemplary embodiment, a bonding of a proximal stainless steel lumen **645** and a plastic lumen **642**, for example, a polyurethane-based extrusion. As set forth above, a rigid lumen **645** in the handle portion keeps rigidity there and a flexible lumen **642** distal of the distal handle **672** allows the lumen to flex as needed. The distal end of the rotator body **294** is also fluidically sealed off from the interior of the distal interior of the delivery system with a hemostasis o-ring **293**. FIG. **105** is still a further enlarged view around the pusher clasp spring **298**.

[0402] A transverse cross-sectional view through the handle assembly **670** is illustrative of the interaction between and relationship of various components of this assembly **670**. The cross-sections shown in FIGS. **106** to **118** progress from proximal to distal.

[0403] A first transverse cross-section through the longitudinal slot **583** of the locking knob **676** is illustrated in FIG. **106**. In this cross-sectional plane, the clasp body **602** is shown as filling up most of the interior of the clasp sleeve **614**. The anchoring bore in the clasp sleeve **614** for the setscrew **585** is shown aligned with the slot **583**.

[0404] A second transverse cross-section through the three-position slot **587** of the locking knob **676** is illustrated in FIG. **107**. In this cross-sectional plane, the clasp body **602** still is shown as filling up most of the interior of the clasp sleeve **614**. The slot **6022** of the clasp body **602** for receiving one end of the torsion spring **606** is also depicted in FIG. **107**.

[0405] A third transverse cross-section through the clasp body **602** before the locking washer **608** is illustrated in FIG. **108**. In this cross-sectional plane, the slot **6022** of the clasp body **602** is aligned with a slot **6143** inside the proximal end of the clasp sleeve **614** that is not visible in FIG. **93** but is visible through the cutout in FIGS. **59** and **60**. This alignment is merely shown in FIG. **108** for understanding the different depths of these slots **6022**, **6143**. Like the pusher clasp spring **298**, the distal clasp body spring **606** has ends with different lengths. The first, shorter, end is inserted into the inner slot **6022** of the clasp body **602** and the second, longer end is inserted into the slot **6143** of the clasp sleeve **614**.

[0406] The fourth transverse cross-section between the proximal clasp assembly **604** and the rotator assembly shows, in FIG. **109**, the spatial separation of these two assemblies that is depicted, for example, in FIGS. **101** to **102**. Visible in these figures is the longitudinal slot **6141** that, as shown in **11** in the cross-sections of FIGS. **110** to **111**, guides the movement of the pusher clasp rotator **292** by delimiting a space that corresponds to the width of the boss **2924** that extends out from the outer circumferences of the pusher clasp rotator **292**. This slot **6141** allows the pusher clasp rotator **292** to move longitudinally freely with respect to the clasp sleeve **614**; simultaneously, this connection prevents any rotation of the pusher clasp rotator **292** that is independent from rotation of the clasp sleeve **614**. Accordingly, as the clasp sleeve **614** rotates about its longitudinal axis, the pusher clasp rotator **292** will rotate as well. The further enlarged view of the center of the configuration illustrated in FIG. **110** is depicted in FIG. **111**. Here, the rotator assembly portions are clearly shown with the pusher clasp spring **298** therebetween.

[0407] The sixth cross-section of FIG. **112**, and the enlarged view of the sixth cross-section in FIG. **113**, illustrate the longitudinally fixed but rotationally free connection between the pusher clasp rotator **292** and the rotator body **294**. The two bores in the pusher clasp rotator **292** for receiv-

ing the dowels **2926** (not illustrated here) are clearly shown to intersect the open space in the groove **2944** of the rotator body **294**.

[0408] A seventh cross-section in FIG. **114** shows the connection of the pusher clasp body **296** and the proximal handle **678** through the plug **2964**. This view also depicts the fluid communication between the interior of the handle assembly **670** and the luer fitting **612**. When the luer **612** is connected to a fluid supply, the flushing liquid enters the interior cavity distal of the rotator body **294** and sealed off by the o-ring **293** and purges all air therein at the distal end of the delivery system. FIG. **114** also shows the graft push lumen **642** extending through the handle body **674** beginning after the distal side of the o-ring **293**.

[0409] The eighth cross-section of FIG. **115** illustrates the distal projection **297** at which the crimp ring **295** holds the sheath lumen **654** onto the pusher clasp body **296**. This figure also illustrates the open radial space between the clasp sleeve **614** and the graft push lumen **642**. To keep the relatively long extent of the flexible inner lumen **620**, **640**, **642** passing through the open interior of the handle body **674** from moving out of a centered orientation (i.e., from bending out from the longitudinal axis of the handle body **674**, sliding spacers **6142** are periodically provided along the clasp sleeve **614** as shown in FIGS. **93** and **116** to **118**. These spacers **6142** are only needed while the proximal handle **678** is moving the rotator assembly and the pusher clasp body **296** in a distal direction to prevent bending of the interior flexible lumen **620**, **640**, **642**. Accordingly, the spacers **6142** can slide within the groove **6141** of the clasp sleeve **614** up to and over the distal end of the clasp sleeve **614** (the right side of the sleeve **614** as viewed in FIG. **93**; see also FIG. **117**). Each of these spacers **6142** is self secured in a slidable manner to the clasp sleeve **614**.

[0410] FIG. **117** depicts a ninth cross-section through a distal end of the clasp sleeve **614** within the distal handle **672**. The distal handle **672** freely rotates about the handle body **674** in an exemplary embodiment. In such an embodiment, the outer catheter **660** will also freely rotate about all of the lumen **620**, **640**, **642** therein because of the fixation between the outer catheter **660** and the distal handle **672**. See FIG. **118**.

[0411] The shaded parts in FIG. **119** are provided to show portions of the features around the clasp body **602**. In this view, the rotator assembly is removed.

[0412] The following text describes the four movements for implanting a prosthesis with the delivery system and the relative connections between relevant lumens when in the three different settings of the locking knob **676**.

[0413] The first movement will be referred to as the advancement stage and utilizes position **1** of the locking knob **676**. When in position **1**, the distal spring **298** is engaged around and holds the pusher support tube **645** (and, therefore, graft push lumen **642**) to the rotator assembly **292**, **294**. This assembly **292**, **294** is fixed at the distal end of the rotator body **294** inside the pusher clasp body **296** (through a non-illustrated setscrew passing through the threaded bore **2966** shown in FIG. **98**). As set forth above, the pusher clasp body **296** is fixed to the proximal handle **678** and, therefore, the pusher support tube **245** moves with the proximal handle **678** in position **1**.

[0414] In this first movement, the entire distal assembly is advanced up to the implantation site using the proximal handle **678**. Thus, when the handle **678** moves distally, all of the lumen, including the guidewire lumen **620**, the apex release lumen **640**, the graft push lumen **642**/proximal pusher support tube **645**, and the sheath lumen **654**, are locked together and move distally with a corresponding movement of the proximal handle **678**. As the outer catheter **660** is longitudinally fixed to the distal handle **672**, it remains longitudinally fixed during the first movement. The lumen displacement in the advancement stage is depicted in FIGS. **19** to **21**.

[0415] The second movement will be referred to as the primary deployment stage and utilizes position **2** of the locking knob **676**. When in position **2**, the distal spring **298** is disengaged from the pusher support tube **645** and the proximal spring **606** becomes engaged around the pusher support tube **645** to anchor only the push rod **642** (without lumen **620**, **640**) to the proximal handle **678** and allow retraction of sheath lumen **654** (and, thereby, the inner sheath **652**) while all other lumens are disengaged and remain stationary.

[0416] In this second movement, the inner sheath **654** needs to be moved in the proximal direction, as shown in FIGS. **22** to **24**. Accordingly, when the handle **678** moves distally, only the sheath lumen **654** moves with the handle **678**. Thus, in position **2** of the locking knob **676**, the sheath lumen **654** is locked to the proximal handle **678** and moves proximally with a corresponding movement of the proximal handle **678**; all of the other lumen, including the guidewire lumen **620**, the apex release lumen **640**, and the graft push lumen **642**/proximal pusher support tube **645**, are unlocked and remain in the distally deployed position. See FIGS. **22** to **24**.

[0417] The third movement will be referred to as the final deployment stage because, in this movement, the apex capture device **634** completely releases the distal end of the prosthesis as shown in FIG. **14**. Here, the apex release lumen **640** is unlocked (using the release mechanism of FIG. **91**) with respect to the guidewire lumen **620** and the graft push lumen **642**/**645**.

[0418] The fourth movement will be referred to as the extraction stage and utilizes position **4** of the locking knob (the third of the three positions in the slot **587** of the locking knob **676**). When in position **4**, both the distal spring **298** and the proximal spring **606** are disengaged from the pusher support tube **645** to allow the user to pull the proximal end of the pusher support tube **645** and withdraw it from the implantation site. The entire inner lumen assembly **620** and **640** travels with the proximal movement of the pusher support tube **645** because the release mechanism (see FIG. **91**) is pulled with the support tube **645** as it moves proximally.

[0419] Self-Centering Tip

[0420] As set forth above, the bare stent **30** provides an outward, expanding force at the proximal end **12**. The bare stent **30** and the proximal stent **23** are in a compressed state when attached to the graft sleeve **10** and also provide an outward, expanding force to the graft sleeve **10**. Therefore, when implanted, these forces center the proximal end of the stent graft **1** in the vessel and press the graft sleeve **10** against the vessel wall to prevent leaks that might occur between the graft sleeve **10** and the vessel wall. Such leaks at the proximal end **12** are to be avoided in stent graft implantation.

[0421] Because some physicians are concerned that the bare stent could damage the aortic wall, especially in the case of aortic dissection, they prefer to use a stent graft without a bare stent, such as the stent graft **1100** shown in FIGS. **72** and **74** to **77**. In this configuration, the proximal end **12** can travel further upstream in the aorta and, in doing so, place the graft sleeve **10** closer to the heart. Such an implantation has various

advantages, such as the removal of the possibility of bare stent puncture or damage to the vessel and the ability to treat diseased portions of the aorta closer to the heart.

[0422] However, if the bare stent **30** is removed, the ability to center the proximal end **12** is affected. One deficiency of thoracic grafts not having a bare stent is a misalignment of the proximal end of the prosthesis with the aortic curvature, which leads to improper apposition of the proximal end of the graft with the aortic arch inner curvature. Proper apposition is a desirable characteristic.

[0423] Stent grafts, by their nature of replacing the through-conduit of a damaged tubular vessel, have a proximal opening **12** for receiving therein the incoming fluid previously carried by the damaged vessel. See, e.g., FIG. **1**. It is desirable to directly contact the entire perimeter of this opening to the inside surface of the vessel in which the stent graft is to be placed because an opening between the proximal end of the stent graft and the vessel wall would allow a secondary flow outside and around the stent graft. This bypassing secondary flow is to be avoided when implanting stent grafts in a vessel and is particularly undesirable when implanting a stent graft in the aorta. The present invention provides a device, system and method for reducing and/or eliminating the possibility of such a bypassing flow by placing the proximal end **12** in a desired position within the vessel.

[0424] For the purposes of discussion, a few terms will be defined. The plane intersecting the proximal end opening of a stent graft is referred to herein as the inflow plane. The ring of tissue inside the vessel at which the proximal end opening is to be implanted is referred to herein as an upstream implant ring. The plane in which the upstream implant ring resides in the vessel is referred to herein as the implant plane. A longitudinal tangent is referred to herein as a line that is orthogonal to the implant plane at a point on the upstream implant ring.

[0425] A most-desirable implantation of the stent graft occurs when the inflow plane and the implant plane are co-planar. In this orientation, the longitudinal tangent of each point along the upstream implant plane is orthogonal to the inflow plane. This means that the outward force imparted by the proximal end of the stent graft is along a line that is co-planar with the implant plane, thereby insuring that the fluid-sealing force of the proximal end is maximized at the upstream implant ring.

[0426] When a stent graft is implanted in a longitudinally straight vessel, the inflow plane and the implant plane are virtually co-planar. In this orientation, a maximum outward sealing force is established at each point on the upstream implant ring, thereby maximizing the possibility of creating a permanent fluid-tight seal along the entire perimeter of the upstream implant ring.

[0427] When a stent graft is to be placed in a longitudinally curved vessel, as shown in FIGS. **19** to **24** and **65** to **67**, for example, co-planar alignment of the implant plane and the inflow plane does not occur naturally. In fact, prior art stent grafts and delivery systems could not establish this co-planar alignment of the implant plane and the inflow plane when the stent graft was placed in a curved vessel. As such, when the stent graft was implanted in the curved vessel, the inflow plane was left at an angle to the implant plane, which, in turn, created a gap at the inferior side of the curved vessel. In some instances, this gap allowed fluid to flow impermissibly around the implanted stent graft.

[0428] One of the primary reasons for this misalignment is due to the behavior of the guidewire within the curved portion of the vessel. The guidewire **610** does not remain centered within the vessel throughout the curved portion of the vessel—as illustrated diagrammatically in FIGS. **19** to **24** and **65** to **67**. Instead, in practice, the guidewire **610** tracks toward the superior (outside) curve from approximately the center axis of the vessel until it actually contacts the interior of the superior curve at least at one point within the curved vessel. The curved guidewire, therefore, not only guides the stent graft towards the superior curve, it does so while imparting an outwardly directed force to the stent graft—a force that naturally moves the stent graft off center in the curved vessel.

[0429] This non-axial tracking of the guidewire **610** is diagrammatically shown in FIG. **120**. Here, the inflow plane **300** and the implant plane **400** are at an angle a to one another. Because the diameter of the upstream implant ring **12** has a maximum length that is defined by the opening of the graft material, an inferior gap **13** appears between the inferior curved vessel wall and the upstream implant ring **12**. The present invention provides devices and methods for automatically centering the stent graft **1100** within the vessel and, thereby, substantially align the implant plane **400** with the inflow plane **300** as shown in FIG. **121**. As used herein, substantial alignment of the implant plane **400** and the inflow plane **300** is an angular difference of less than 15 degrees between the two planes.

[0430] A first exemplary embodiment of the device that improves proximal end apposition when it is placed in the aortic lumen prior to deployment in curved anatomy is illustrated in FIGS. **122** and **123**. The previously described tip **632** is altered as shown in FIG. **122**. The new tip **632'** has an overall length that is greater as compared to the tip **632**. The distal section **6322'** is tapered similarly to tip **632**. The proximal section **6324'** is straight and, hence, not bendable while tracking over the guidewire **610**. This stiff proximal section **6324'**, along with the stiff distal and proximal clasps, produces an elongated stiff region in the nose cone assembly **630** of the delivery system **600**. This stiff region does not accommodate the superior curvature of the aorta and pushes the distal end of the delivery system down towards the inferior curvature when tracking in curved anatomies.

[0431] FIG. **123** illustrates how a modified tip pushes the proximal end of the stent graft down (as viewed in FIG. **123**) towards the inferior curve of the curved aortic lumen. If the proximal end **12** of the stent graft **1100** is deployed while centered as shown, the proximal end **12** will have proper apposition with the aortic wall at the inferior curvature.

[0432] A second exemplary embodiment of the proximal end apposition improvement device is illustrated in FIGS. **124** to **126**. In this embodiment, the tip **632"** contains therein a set of balloons **6322"** that, when inflated independently, exit and extend from a respective slit **6324"**. The number of balloons can be **1**, **2**, **3**, **4**, or more. In the exemplary embodiments shown, there are three balloons spaced 120 degrees apart from one another. Which balloon(s) that are inflated after the tip **632"** is positioned in the curved vessel will depend upon the position of the slits **6324"**. As shown in FIG. **125**, one balloon **6322"** can be inflated to center the tip **632"** or, as shown in FIG. **126**, all three balloons **6322"** can be inflated.

[0433] A third exemplary embodiment of the proximal end apposition improvement device takes its genesis from the bare stent **30**. In all of the embodiments for improving apposition, the bare stent **30** is removed. Because some physicians are concerned that a bare stent can damage an aortic wall,

especially in the case of aortic dissection, the invention proposes creating a bio-absorbable bare stent. Such a bare stent **30** dissolves over time but ensures proper alignment of the proximal end of the graft during deployment. Because the bare stent is absorbed, any potential for damaging the aortic wall is eliminated.

[0434] A fourth exemplary embodiment of the proximal end apposition improvement device is illustrated in FIGS. **127** and **128**. A dual-cone **410** device centers the nose cone assembly **630** of the delivery system **600** within the lumen. Centering the nose cone assembly within the aortic lumen, in turn, will ensure that the proximal end of the stent graft **1100** is properly aligned with the aorta. The dual-cone device can be made of silicone. The bases of the two opposing conical parts are adjacent one another. When the ends of the conical parts are pressed towards one another, the diameter of the conical base increases. As the base increases in diameter, its circular expansion comes in contact with the superior curve of the aortic wall to force the nose cone assembly **630** towards the center of the aortic lumen. When fully expanded, the proximal end **13** of the stent graft **1100** is in a desired centered position and is, therefore, ready for deployment. It is noted that the shape of the conical components can be modified to allow greater expansion of the conical base at specific locations.

[0435] A fifth exemplary embodiment of the proximal end apposition improvement device is illustrated in FIGS. **129** and **130**. This centering system uses a pull-wire **420** that can center the tip end of the delivery system within the aortic lumen. The pull-wire **420** resides inside the delivery system between the stent graft **1100** and inner sheath **652**. One end of the pull-wire **420** can be attached to the nose cone assembly **630**, for example, the proximal apex body **638** and the other end of the continuous wire is attached to a mechanism at the proximal portion of the delivery system **600**, whether at the proximal end of the handle assembly **670** or at the apex release assembly **690**. This mechanism, when operated, pulls the wire proximally to produce a force P having two resultant forces P' and P" shown in FIG. **130**. even though P' is the smaller of the two resultant forces, if force P is large enough, P' will pull the tip towards the inferior curve of the aorta. FIG. **129** illustrates the distal end of the delivery system being centered by pulling on the wire **520** to create centered apposition of the proximal end **12** of the stent graft **1100**.

[0436] A sixth exemplary embodiment of the proximal end apposition improvement device is illustrated in FIGS. **131** and **132**. The apex clasp device **636**, **638** is formed in two halves or three thirds. In this configuration, the split clasp mechanism allows angular adjustment of the proximal end of the graft within the aortic lumen to insure optimum apposition with the aortic wall as shown in the comparison of FIGS. **131** and **132**. The split clasp allows the user to move forward and backward some specific apices along the proximal circumference of the stent graft **1100** which, in turn, changes the angle of the inflow plane **300** with respect to the implant plane **400**. By using this process and system, the physician can adjust the orientation of the proximal end **12** to ensure proper apposition against the aortic arch inner curvature.

[0437] A seventh exemplary embodiment of the proximal end apposition improvement device is illustrated in FIGS. **133** to **135**. As set forth above, the apex clasp device **636**, **638** uses a set of distally projecting fork tines and an internal castellated portion to create openings in which the proximal apices **32** of the bare stent **30** or the proximal apices **1132** of the clasping stent **1130** are held releasably. Instead of the apex clasp device **636**, **638**, each of the apices **32**, **1132** are individually held with an apex capture mechanism that is shown in FIGS. **133** to **135**. Pushing the wire in one of the apex capture mechanisms causes the proximal end **12** of the stent graft **1100** to move. A combination of such pushing forces on one or more of these apex capture mechanisms will cause the proximal end **12** to move into a desired apposition of the inflow plane **300** and the implant plane **400**. When the wires are pulled, they move proximally and release the capture of the respective stent apex **32**, **1132**.

[0438] An eighth exemplary embodiment of the proximal end apposition improvement device is illustrated in FIGS. **136** to **142**. Here, the tip **632** has slots through which extend loops of wires that, when extended as shown in FIGS. **137**, **141**, and **142**, center the tip **632** within the vessel in which it is placed. The mechanism is composed of wires that are contained inside the slots in a straight configuration. Compressing the wires causes them to protrude from the slots and form loops that can press against the vessel wall, thereby centering the tip **632** within the vessel. Extension of the loops can be actuated through a single pull mechanism, for example, with a telescoping slide. Centering of the tip is actuated by pulling on a knob (for example) located at the proximal end of the delivery system. The knob is connected to the wire loops by a catheter that extends from the knob to the distal end of the loops. The loops, in turn, are fixed at their distal end. Pulling on the knob would cause the catheter to slide in a proximal direction causing a compression of the wire loops, making them protrude from the tip **632** as shown in FIGS. **137**, **141**, and **142**. In addition, the catheter can contain a component that engages the clasp as it is moved proximally. Thus, as the catheter is moved, at approximately three-fourths of the actuation stroke, the component on the catheter engages the clasp and with the remainder of knob retraction the clasp would be released.

[0439] A ninth exemplary embodiment of the proximal end apposition improvement device is illustrated in FIG. **143**. In this approach, an accessory device **430** is introduced into one or more of the contra lateral limbs of the patient or radially through the arm. Before, during or after, the delivery system is used to extend the aortic stent graft into the aortic arch for implantation. The accessory device **430** is, then, extended into the aortic arch and pressed against a portion of the delivery system. For example, as shown in FIG. **3**, the accessory device **430** can be introduced through the left sub-clavian artery and used to bias the delivery catheter away from the greater curve of the arch. The accessory device **430** can have many forms. It could be a balloon, a mechanical mechanism, and a pusher from the trans-femoral approach, a balloon or a mechanical mechanism is practical. Each of these concepts can be applied in a direct approach from the left sub-clavian artery or the Brachiocephalic Trunk.

[0440] A tenth exemplary embodiment of the proximal end apposition improvement device is illustrated in FIGS. **144** to **146**. In this embodiment, the properties of temperature sensitive nickel-titanium are combined with the technology of localized heating to present a controlled shape manipulation. Shape memory bends are imparted to portions of the delivery system **600** prior to incorporation in the delivery system **600**. Then, the portions are placed into the desired configuration, e.g., linear, and incorporated into the delivery system **600**. Heater bands **440** are distributed along the delivery system **600** adjacent the memory bends. As shown in FIGS. **144** to

146, application of heat at the memory bends will cause the adjacent portion of the delivery system **600** to bend. If the bends are coordinated, they can be made to bend the in-vivo delivery system **600** in any desired way, in particular, to center the tip in the vessel and, thereby, implant the proximal end **12** of the stent graft **1100** with a proper apposition. Alternatively, ultrasonic sensitive crystals can be used as the heater bands. Thus, when energy is applied, the crystal heat up and cause the nickel-titanium memory portion to bend into their pre-programmed memory shape.

[0441] An eleventh exemplary embodiment of the proximal end apposition improvement device is illustrated in FIGS. **147** to **151**. In this embodiment, a hollow balloon delivery catheter **450** having a balloon configuration **452** is provided. The balloon delivery catheter **450** has an interior bore **454** through which the outer catheter **660**, the nose cone assembly **630**, and the inner sheath **652** travel. FIGS. **149** to **151** illustrate an exemplary method for using the balloon delivery catheter **450** of the present invention. First, the balloon delivery catheter **450** is inserted into at least part of the aortic arch and the balloon configuration **452** is inflated to center and hold the balloon delivery catheter **450** in position within the aorta. See FIG. **147**. Then, the distal end of the delivery assembly **600** is passed through the balloon delivery catheter **450** as shown in FIG. **148**. The proximal end **12** of the stent graft **1100** is deployed in the aortic arch and, after satisfactory apposition of the inflow plane **300** and the implant plane **400** is verified, the balloon configuration **452** is deflated and the balloon delivery catheter **450** can be removed. Finally, the stent graft **1100** is fully implanted as set forth above.

[0442] In the exemplary balloon configuration **652** shown in FIGS. **150** and **151**, there are three balloons **452** with spaces therebetween so that blood can flow past the balloons **452** when inflated. This tri-balloon device is shown in FIGS. **150** and **151**.

[0443] Alternative to the balloon delivery catheter **450**, a balloon configuration **452** can be added at the distal end of the outer catheter **660**. When the outer catheter **660** is at its distal-most position in the aorta, the balloon configuration **450** inflates and centers the nose cone assembly **630** within the aorta. Thus, when the inner sheath **652** containing the stent graft **1100** is extended from the outer catheter **660**, the nose cone assembly **630** is centered within the aorta and the inner sheath **652** and nose cone assembly **630** can be extended within the aortic arch in a centered orientation. A twelfth exemplary embodiment of the proximal end apposition improvement device is illustrated in FIGS. **152** to **155**. In this embodiment, a balloon delivery rod **460** having a balloon configuration **462** is provided. The balloon delivery rod **460** is inserted into at least part of the aortic arch and the balloon configuration **462** is inflated at the superior curve of the aortic arch. See FIG. **152**. Then, the distal end of the delivery assembly **600** is passed through the aorta and along the inflated balloon configuration **462** as shown in FIG. **153**. The proximal end **12** of the stent graft **1100** is deployed in the aortic arch and, after satisfactory apposition of the inflow plane **300** and the implant plane **400** is verified, the balloon configuration **462** is deflated and the balloon delivery rod **460** can be removed. Finally, the stent graft **1100** is fully implanted as set forth above. FIG. **155** illustrates one possible cross-sectional configuration for the balloon **462** of this embodiment.

[0444] A thirteenth exemplary embodiment of the proximal end apposition improvement device is illustrated in FIGS. **156** to **158**. As described above, a proximal edge **12** that is perpendicular to the longitudinal edges (see FIG. **71**) will be difficult to position in a curved vessel and, in such a case, the inflow plane **300** will be at an angle to the implant plane **400** as shown in FIG. **157**. To counteract this non-apposition of the proximal end **12** that does not have a bare stent, the stent graft **1100** can be formed with a non-linear proximal end **12'** as shown in FIG. **158**. With this angled contour, if the shorter side (left side in FIG. **158**) is positioned at the inferior curved of the vessel, the proximal end **12** will fit inside the aorta to align the inflow plane **300** and the implant plane **400** as shown in FIG. **158**.

[0445] A fourteenth exemplary embodiment of the proximal end apposition improvement device is illustrated in FIG. **159**. The tip **632** or the nose cone assembly **630** is configured with a symmetric dilator **470** shown in FIG. **159**. This dilator **470**, when closed, is merely a cylinder. However, when opened as shown in the figure, the two outer bearing surfaces **472** apply pressure to opposing sides of the vessel in which the stent graft **1100** is to be implanted, thereby centering the nose cone assembly **630** and the proximal end **12** within the vessel for implantation with apposition of the inflow plane **300** and the implant plane **400**.

[0446] A fifteenth exemplary embodiment of the proximal end apposition improvement device is illustrated in FIGS. **160** and **161**. In this embodiment, a plurality (e.g., four) of wires **480** are threaded through the delivery assembly **600** and are attached to, for example, four quadrants of the apex capture device **634**. At the proximal end of the delivery assembly **600** is located an actuation knob or "joystick" **482**. By pulling or otherwise maneuvering the knob **482**, tension is applied to one or more of the wires **480** and moves the tip **632**. Such maneuvering is used to center the tip **632** as desired to ensure apposition of the inflow plane **300** and the implant plane **400**.

[0447] A sixteenth exemplary embodiment of the proximal end apposition improvement device is illustrated in FIGS. **162** and **163**. Because blood is flowing through an aorta in which a stent graft **1100** is to be implanted, properties of the flow can be used for making perpendicular the stent graft's proximal opening with the tangent of the aortic arch to provide an optimal proximal seal. In particular, a tapered "windsock" **490** can be incorporated into the delivery assembly **600**. The proximal diameter of the windsock **490** is large enough so that, upon expansion due to the incoming blood flow, the proximal opening **492** of the windsock **490** opens and presses against the aortic wall. In such a configuration, the windsock **490** channels all blood flow therethrough and discharges the flow from a distal opening **494**. The distal opening **494** is made to be smaller than the proximal opening **492**. The change in opening size increases the pressure in the wind sock **490**. When the blood flow is channeled into a path that is concentric within the aorta, such as through an evenly spaced set of exit orifices **494**, the balanced (and centered) pressure would radially center the leading portion of the stent graft **1100** during deployment.

[0448] In one exemplary configuration shown in FIG. **162**, the proximal end **492** of the windsock **490** is attached with sutures to the apex capture device **632**. The distal end **492** of the windsock **490** may or may not be attached to a portion of the delivery assembly **600** distal of the proximal end **12** of the stent graft **1100** to be deployed. Compare FIGS. **162** and **163**. It is noted that having no distal attachment (FIG. **163**) may be more advantageous because performance of blood flow balancing may be better than with distal attachment (FIG. **162**). If the distal end **494** of the windsock **490** is attached, a

break-away method for the sutures can be used along with the incorporation of blood flow ports as illustrated in FIG. **162**. Performance of the windsock **490** can be evaluated with varying discharge port diameters and overall tapers.

[0449] A seventeenth exemplary embodiment of the proximal end apposition improvement device is illustrated in FIGS. **164** to **169**. In this embodiment, a plurality of memory shape metal (e.g., Nitinol) hypo-tubes **500** are attached to the delivery assembly **600** and act as a mechanism to center the tip and, therefore, the stent graft **1100** during stent graft positioning and deployment. In one exemplary embodiment, two control tubes or lumens **502**, **504** are placed somewhere between, around, or over the apex release lumens **620**, **640**. Each of the hypo-tubes **500** is secured at its distal end **506** to the inner control tube **502** at or near the tip **632**. Each of the hypo-tubes **500** is further secured at its proximal end **508** to the outer control tube **504** at a distance from the tip **632**. As illustrated in the comparison of FIGS. **165** and **166**, forward (advancement) motion of the outer control tube makes the hypo-tubes **500** expand into a "basket" shape that contacts the walls of the aorta and centers the proximal end **12** of the stent graft **1100** within the vessel. When in this advanced position of the outer control tube **504**, as shown in FIG. **164**, the hypo-tubes **500** are used to create an arc during positioning and, thereby, facilitate the centering function. Backwards (retraction) motion of the outer control tube **504** decreases the profile of the hypo-tubes **500** to lie longitudinally along the length of the inner control tube **502**.

[0450] To incorporate this feature into the stent grasping device that connects with each of the proximal apices **1132** of the clasping stent **1130**, each hypo-tube **500** has a small "notch" **510** (slightly larger than the diameter of the wire of the clasping stent **1130**. This "notch" is located at the center of the pre-formed arc of the hypo-tubes **500** (see FIGS. **166**, **167**). Inside the diameter of the hollow hypo-tube **500** is a rigid release wire that acts to engage the proximal apices **1132** to attach releasably the clasping stent **1130** to the delivery system. See, e.g., FIGS. **133** to **135**. The releasable clasping shown in FIGS. **168** and **169** ensures a secure lock of the stent graft **1100** to the delivery assembly **600**. During attachment of the stent graft **1100** to the delivery assembly **600**, the apices **1132** of the clasping stent **1130** are positioned into each notch **510** and the rigid release wire is fed over the clasping stent **1130** to capture (secure) the clasping stent **1130** and secure it to the delivery assembly **600** (see FIG. **169**). Release of the stent graft **1100** from the delivery assembly **600** is obtained by withdrawing the rigid wire within the hypo-tubes **500**. Expansion of the pre-formed nitinol hypo-tube **500** can be performed manually (slide action) or through a self-expanding configuration.

[0451] An eighteenth exemplary embodiment of the proximal end apposition improvement device is illustrated in FIGS. **170** to **172**. In this embodiment, the tip **632'''** has been given expandable exterior segments **6322'''**, in this case, three segments. The tip **632'''** also contains an interior expansion mechanism, for example, a spring actuated or pusher actuated mechanism, that extends the exterior segments **6322'''** from the position shown in FIGS. **170** and **171** to the position shown in FIG. **172**. When the tip **632'''** is so expanded, it becomes centered within the curved vessel, thereby also centering the proximal end **12** of the stent graft **1100**.

[0452] The tip-centering embodiments are not limited to the distal end of the delivery assembly **600**. The guidewire **610** can also be utilized. More specifically, in a nineteenth exemplary embodiment of the proximal end apposition improvement device, the guidewire **610** can be provided with an expanding "basket" **520** at the distal end thereof as shown in FIGS. **173** to **175**. This basket **520** can be either self-expanding or manually expanded and opens within the aorta when the basket **520** is just upstream of the implant plane **400**. The delivery assembly **600** is, then, introduced over the guidewire **610** to the deployment site. After delivery of the stent graft **1100**, the guidewire **610** is withdrawn into the guidewire lumen **620** of the delivery assembly **600** and withdrawn along with the assembly **600**.

[0453] A twentieth exemplary embodiment of the proximal end apposition improvement device is illustrated in FIG. **176**. This embodiment provides an alternative to the bio-absorbable bare stent **30** by including a removable bare stent **30'**. Utilizing such a bare stent **30'** during deployment but removing it after apposition of the inflow plane **300** and the implant plane **400** is confirmed provides the self-centering features of the original bare stent **30** but without the detrimental affects that can be caused by the long-term exposure of the bare stent **30** to the interior wall of the vessel in which the stent graft **1100** is implanted. This removable bare stent **30'** can be fixed onto or be a part of the apex capture device **634**. The bare stent **30'** can be fixedly secured to the proximal end of the distal apex head **636**, for example, and removably secured to the proximal end **12** of the stent graft **1100**. Detachment of the bare stent **30'** can be accomplished in a variety of ways. One exemplary embodiment can collapse the bare stent **30'** with a collection ring that slides over the bare stent **30'** in a proximal direction. As the ring progresses proximally along the individual turns of the bare stent **30'**, a radially inward force is imparted to each proximal apex **32'** sufficient to release or break the contact between the apex **32'** and the stent graft **1100**. Another exemplary bare stent removal device reverses the orientation of a hook that connects each apex **32'** to the stent graft **1100** so that the apex capture device **634** is moved distally to release the bare stent **30'** from the stent graft **1100**.

[0454] It is envisioned that any of the nineteen exemplary embodiments described above can be used individually or in any combination.

[0455] While exemplary embodiments of the invention have been illustrated and described, it will be clear that the invention is not so limited. Numerous modifications, changes, variations, substitutions, and equivalents will occur to those skilled in the art without departing from the spirit and scope of the present invention as defined by the appended claims.

We claim:

1. A method for implanting a prosthesis centrally within a curved lumen, which comprises:

loading a prosthesis into a delivery sheath, the prosthesis having a proximal end and the sheath having a distal end;

advancing the sheath in a patient towards the curved lumen to place at least the proximal end within the curved lumen; and

centering at least one of:

the proximal end of the prosthesis; and

the distal end of the sheath,

within the curved lumen.

2. (canceled)

3. (canceled)

4. (canceled)

5. The method according to claim **1**, which further comprises carrying out the centering step by centering at least the distal end of the sheath within the curved lumen with a sheath centering device.

6. The method according to claim **5**, which further comprises:

carrying out the loading step by partially collapsing the prosthesis to a size smaller than an interior of the sheath and inserting the partially collapsed prosthesis into the sheath; and

carrying out the deployment step by releasing the prosthesis centered within the curved lumen.

7. The method according to claim **1**, which further comprises:

providing the sheath as a relatively flexible inner sheath; and

slidably disposing the inner sheath inside a relatively stiff outer catheter.

8. The method according to claim **7**, which further comprises carrying out the advancing step by:

first advancing the outer catheter containing the inner sheath together towards the curved lumen to a location proximal of the curved lumen; and

subsequently advancing the inner sheath containing the prosthesis into the curved lumen while the outer catheter substantially remains at the location.

9. The method according to claim **1**, which further comprises carrying out the centering step within a curved portion of an aorta.

10. The method according to claim **1**, which further comprises:

providing the prosthesis with a tubular graft body defining an inflow plane and an exit plane; and

providing all portions of the stents on the graft body between the inflow plane and the exit plane.

11. The method according to claim **1**, which further comprises:

placing a guidewire through an implantation site within the curved lumen;

carrying out the advancing step by guiding the delivery sheath containing the prosthesis along the guidewire; and

carrying out the centering step by moving at least one of:

the proximal end of the prosthesis; and

the distal end of the sheath,

in a direction away from the guidewire at the implantation site.

12. The method according to claim **1**, which further comprises providing a tip and carrying out the centering of the proximal end of the prosthesis with the tip.

13. The method according to claim **12**, which further comprises slidably disposing the tip within the delivery sheath.

14. The method according to claim **13**, which further comprises operatively connecting the tip to the delivery sheath to perform the centering step with the tip and the sheath.

15. The method according to claim **1**, which further comprises:

slidably disposing a tip within the delivery sheath to place the tip at the distal end of the sheath;

connecting a sheath centering device to the tip through the sheath; and

carrying out the centering step with the sheath centering device.

16. The method according to claim **1**, which further comprises:

providing a tip with a sheath centering device;

slidably disposing the tip within the delivery sheath to place the tip at the distal end of the sheath; and

carrying out the centering step by expanding the sheath centering device out from the tip.

17. The method according to claim **1**, which further comprises:

providing a sheath centering device at the proximal end of the sheath; and

carrying out the centering step with the sheath centering device.

18. The method according to claim **1**, which further comprises carrying out the centering step with a sheath centering device physically separate from the sheath.

19. (canceled)

20. The method according to claim **1**, which further comprises carrying out the centering step with a sheath centering device surrounding an exterior of the sheath.

21. The method according to claim **1**, which further comprises carrying out the centering step with a sheath centering device disposed between an exterior surface of the sheath and a wall of a lumen in which the sheath is present.

22. The method according to claim **1**, which further comprises carrying out the centering step with a sheath centering device disposed within the sheath.

23. A method for centrally implanting a prosthesis, which comprises:

placing at least a proximal end of a prosthesis in a curved lumen of a patient; and

centering the proximal end of the prosthesis within the curved lumen before implanting the prosthesis therein.

24. A method for implanting a prosthesis centrally within a curved lumen, which comprises:

loading a prosthesis into a delivery sheath, the prosthesis having a proximal end and the sheath having a distal end;

in a first advancing step, advancing the outer catheter containing the inner sheath together towards the curved lumen to a location proximal of the curved lumen; and

in a second advancing step, advancing the inner sheath containing the prosthesis into the curved lumen to place at least the proximal end within the curved lumen while the outer catheter substantially remains at the location;

centering at least one of:

the proximal end of the prosthesis; and

the distal end of the sheath,

within the curved lumen; and

after carrying out the centering step, deploying the proximal end of the prosthesis centered within the curved lumen.

25. A method of implanting a prosthesis in a patient at a treatment site, which comprises:

providing a prosthesis delivery system with a relatively flexible inner sheath and a relatively stiff outer sheath;

loading a prosthesis inside the inner sheath;

loading the inner sheath containing the prosthesis within the outer sheath;

advancing the outer sheath in a patient towards the treatment site up to a given position at a distance from the treatment site;

while retaining the outer sheath in the given position:
advancing the inner sheath out from the outer sheath to the treatment site to place at least a proximal end of inner sheath within the treatment site; and
centering at least one of:
the proximal end of the prosthesis; and
a distal end of the inner sheath,
within the curved lumen;
retracting the inner sheath to at least partially implant the prosthesis at the treatment site; and
upon completion of prosthesis implantation, retracting both of the inner and outer sheaths from the patient.

* * * * *