Oct. 17, 1939. J. L. FINCH 2,176,657

AIR COOLING FOR THERMIONIC TUBES

Filed Feb. 17, 1937 2 Sheets-Sheet 1

Fig. 1

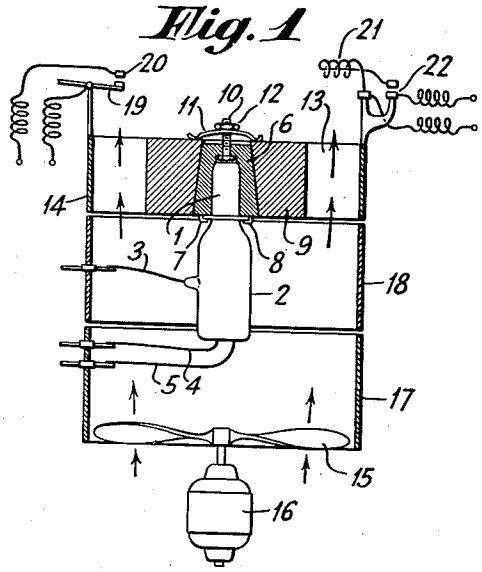

Fig. 2

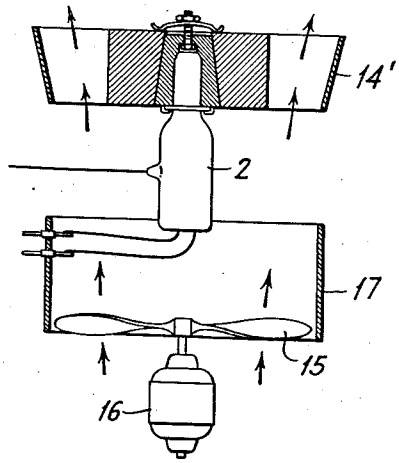

Fig. 4

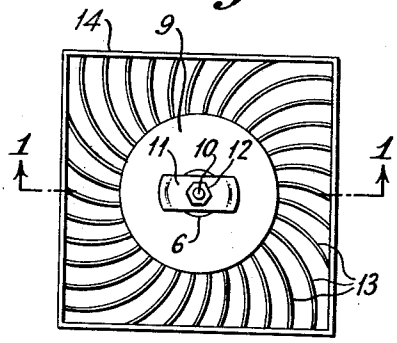

Fig. 3

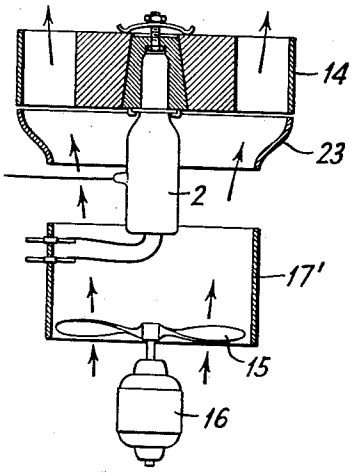

Fig. 5

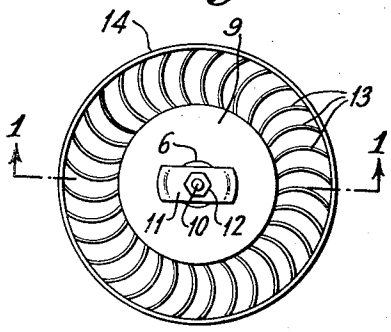

INVENTOR
JAMES LESLIE FINCH
BY H. S. Grover
ATTORNEY

Oct. 17, 1939. J. L. FINCH 2,176,657

AIR COOLING FOR THERMIONIC TUBES

Filed Feb. 17, 1937 2 Sheets-Sheet 2

Fig. 6

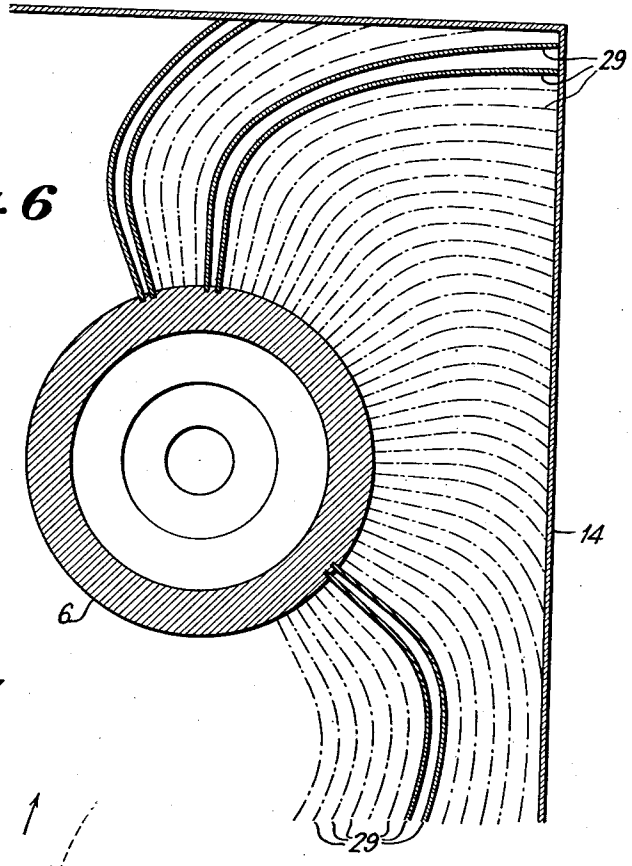

Fig. 7

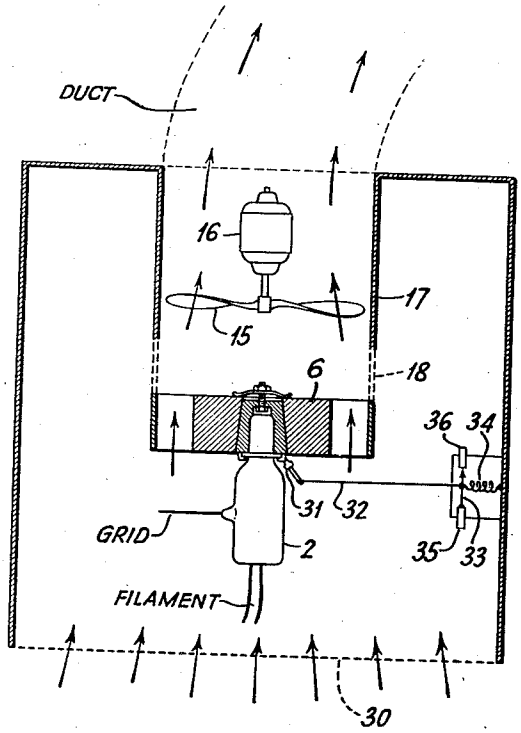

Fig. 8

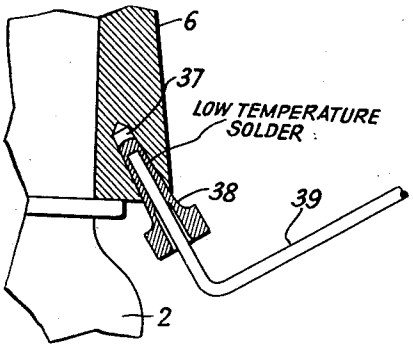

INVENTOR
JAMES LESLIE FINCH

BY H. S. Grover
ATTORNEY

Patented Oct. 17, 1939 2,176,657

UNITED STATES PATENT OFFICE

2,176,657

AIR COOLING FOR THERMIONIC TUBES

James Leslie Finch, Patchogue, N. Y., assignor to Radio Corporation of America, a corporation of Delaware

Application February 17, 1937, Serial No. 126,124

11 Claims. (Cl. 250—27.5)

This invention relates to a new and novel method for the cooling of metal anodes of thermionic tubes in an effective and efficient manner.

An object of this invention is to simplify and improve the cooling of thermionic tubes generally by means of circulating air.

Another object of this invention is to provide an improved air cooling system for the cooling of thermionic tubes having electrical control contacts associated therewith.

Still another object of this invention is to improve the cooling of the vacuum tube by reducing the number of component parts required in a cooling system and thereby reduce the cost thereof.

In the prior art, a vacuum tube was generally cooled by a system employing a liquid medium, such a system requiring a second cooler for the liquid and numerous insulating connections for carrying the liquid from the point of the source to and around the anode of the tube. When direct air cooling has been used it has been found ineffective and results in a reduction of the allowable output of the tubes.

Briefly, this invention comprises a system having a source of air supply, such as for example, a blower or fan, a chamber, and a supporting means for the tube, the supporting means being arranged with a plurality of curved radiating fins.

The outside contour of the supporting members is in two forms, one being rectangular and the other circular. The circular form provides a more economical unit for the same spacing, although it is not quite as efficient as the rectangular surface which gives a slightly better cooling, due to the greater surface area of the cooling fins.

Electrical control contacts are located adjacent the cooling system and arranged to break the power supply circuit when undesired temperatures are reached.

This invention will best be understood by referring to the accompanying drawings, in which:

Fig. 1 is a sectional view of an improved air cooling system;

Fig. 2 is a sectional view of another embodiment of this invention;

Fig. 3 is a sectional view of a further embodiment of this invention;

Fig. 4 is a plan view of Fig. 1, showing the rectangular support and air cooling chamber; while

Fig. 5 is a plan view of Fig. 1, showing a circular support and air chamber;

Fig. 6 is a detail of an improved cooling vane;

Fig. 7 is a sectional view of a still further embodiment of a cooling arrangement; and

Fig. 8 is a sectional detail of a thermostatic switch actuating device.

Referring now in detail to the drawings, 1 is a metal anode of a thermionic tube, 2 indicates its glass envelope, 3 is the grid leads and 4 and 5 the cathode and filament leads. Anode 1 is sealed into a suitable cavity formed in a metallic block 6 by means of some fusible metal, such as solder. Block 6 is held in place by clamps 7 and 8 which serve to additionally hold member 6 in place, should the sealing material or solder melt at the rim portion thereof. The equivalent contour of block member 6 is in the form of a truncated cone and is fitted tightly within a conical aperture in metallic hub 9. Member 6 is firmly secured to hub member 9 by means of a stud 10, clamping spring 11 and nut 12. These clamping members can be removed with the tube when it is necessary to change the tube. Hub member 9 is provided with an extra large outer diameter. This provides a massive metal hub having a cross-section greater than black 6, which allows heat generated in anode 1 to travel through it to the ends of a large number of cooling fins 13 with a minimum of temperature drop. The fins 13 are soldered into slots in the periphery of hub 9 and leave the slots in approximately a radial direction, and are also curved so as to keep the space between adjacent fins approximately parallel or equal throughout their length, which arrangement gives an increased cooling area, and also maintains the air friction between the fins approximately the same throughout the whole sectional area of the cooling system. The outer ends of the fins are secured to an enclosing and supporting member 14; as mentioned above, this may be rectangular or circular in form. A fan 15, driven by a motor 16, forces air upward and around the fins 13, thus carrying away the heat generated in anode 1. Surrounding the fan is a duct or container 17, which may be of metal or transparent insulating material, such as glass. The lower end of 17 is preferably of circular section and fits closely around the blades of the fan 15, or, in the case of a blower, around the manifold. The upper end of duct 17 is of a section corresponding to that of the outside contour of supporting member 14. The spacing between members 14 and 17 is enclosed by a duct 18, made preferably of

insulating material, having the requisite insulating characteristics for withstanding the voltage normally placed upon the member **14** and also being of suitable size for confining the stream of air from the fan so that the most of it passes through the cooling fin area. Member **18** is removable, at least in part, to allow replacement of tubes, and it is preferable that member **18** be made of glass or other transparent insulating material, in order that the inside be visible. The filament leads **4** and **5** are preferably brought out through bushings in the walls of member **17**, while the grid lead **3** is brought out through an aperture in member **18**.

Associated with the cooling unit, is an air flow trip **19** which closes a circuit between member **19** and contact **20**, when the force of air reaches above that of a predetermined value, and allows the circuit to open when the flow is below a predetermined value. A thermostat **21** is also associated with member **14** and is located in such a position that with or without the fan running normally, any excess in temperature will cause the circuit between members **21** and **22** to open, while normal temperatures will allow this circuit to remain closed. These two circuit devices are so connected in the electrical circuit that the power will be removed from the thermionic tube in the case of failure of the cooling air, or in the case of an excess temperature due to any cause.

The modification shown in Fig. 2 is generally similar to that of Fig. 1, except that the air duct **18** can be dispensed with for the reason that the area of the fin section is tapered outwardly toward the top, the upper area being greater where the air leaves than where it enters. A blast of air from the fan directed against the intake of the fins has stored in it kinetic energy, and as this air passes through the expanding fin area its velocity decreases and therefore emerges at a reduced velocity. This decrease in velocity represents a transfer of energy and this transfer is arranged so as to be substantially sufficient to supply the energy required to overcome the friction of air passing between the fins **13**; thus, no difference in pressure is required to force the air through the fins and therefore, essentially all of the air directed to the fins will pass through them, whereas without this taper, the pressure would have to be greater at the intake than at the exhaust. Since the exhaust pressure will be atmospheric, the intake will have to be above atmospheric. This would result in only a part of the air from the fan **15** passing through the fins, if the ducts **17** and **18** were omitted.

A still further modification is shown in Fig. 3. In this modification, member **18** is also dispensed with, and the area through the fins proper does not expand, and although this modification is not as efficient as that of Fig. 2, it is slightly more economical to construct than that shown in Fig. 2. To compensate for the omission of taper **14'**, a duct **23** is placed at the intake side. The area of the intake of duct **23** is less than that of the fins. The stream of air from the fan is directed at this opening. After entering, it slows down, due to the increased area and the kinetic energy thus expended is converted into potential energy in the form of pressure. Thus, while the pressure at the entrance of **23** is atmospheric, at the entrance of the fins it is somewhat above atmospheric. This pressure overcomes the friction through the fins.

An improved cooling or radiating member is shown in detail in Fig. 6. The vanes **29** are provided to give substantially equal spacing by the use of a non-uniform curve. It will be noted that from a desired distance from the anodes, the vanes run substantially parallel, at which point the most effective cooling is obtained. By the use of the non-uniform curved vane, a greater cooling of the tube can be obtained for the same amount of space and air pressure than if the cooling fins or vanes were arranged radially.

A further modification of cooling arrangement is shown in Fig. 7. This arrangement is similar to that of Fig. 1, except that the fan has been placed over the cooling fin assembly and air is drawn up past the cooling fins and then through the fan. The enclosing duct is placed between the fan and the fin assembly, as in Fig. 1. This arrangement also makes it possible to filter the cooling air by providing an air filter **30** and makes it possible to direct the air discharged from the unit into a duct which can be arranged to carry the air to the outside, if the transmitting apparatus is located inside a building.

The thermostat element **21** is arranged to be responsive to the temperature of the air leaving the fin assembly. However, in order to have a more accurate control of the temperature at the very point where the heat is generated, an additional modification is made to provide a thermostat element which is responsive to the temperatures of the hub, itself, and electrically connected to the hub. This thermostat element is indicated as **31**, and is provided with a cord **32** which terminates in a snap switch **33**, having a spring **34**, also maintaining the switch under tension, and in the operating position contacts **35** and **36** are normally closed by switch blade **33**. By means of this thermostatic element arrangement, the electrical contacts are essentially at ground potential, while the actuating thermostatic element is subjected to the anode potential. In place of the string member **32**, a strip of insulating material can be provided.

Fig. 8 shows a sectional detail of the new and novel thermostat element and comprises a tapered aperture **37** in which a metallic plug **38** is driven. A metal rod **39** is retained within member **38** by means of a low melting point solder, such as Wood's metal. In case of excessive heat in hub member **26**, the solder fuses and allows the metallic member **39** to move due to the tension of spring **34** and thus break the circuits and actuate the lock contacts which remove the power from the tube. When the unit has cooled, the solder again solidifies and it is necessary to reinsert member **39** so that it corresponds to the original position.

While only a few modifications of this invention have been disclosed, it is to be distinctly understood that it is capable of taking other forms within the spirit and scope thereof.

What is claimed is:

1. A cooling system comprising an electron discharge device having at least an anode and cathode, a metallic sleeve surrounding said anode, a metallic hub member surrounding said sleeve, a metallic band surrounding said hub member, a plurality of slots in said hub member, a plurality of radiating fins extending outward and located to be substantially equally and parallelly spaced from each other, said metallic band supported to and connecting the outside ends of said fins, and means for supplying cooling air to said tube by a device located adjacent said metallic member.

2. A cooling system comprising an electron discharge device having at least an anode and cathode, a metallic sleeve surrounding said anode, a metallic hub member surrounding said sleeve, said hub member having a cross-section greater than the cross-section of said metallic sleeve, a metallic band surrounding said hub member, a plurality of radiating fins radially extending outward from said metallic hub member and joining said band, means for supplying cooling air to said tube, said means comprising a rotatable device located adjacent said metallic hub member.

3. A cooling system comprising an electron discharge device having at least an anode and cathode, a metallic sleeve surrounding said anode, a metallic hub member surrounding said sleeve, said metallic hub member having a cross-section greater than the cross-section of said metallic sleeve, a metallic band surrounding said hub member, a plurality of slots in said hub member, a plurality of heat radiating fins extending outward and located to be substantially equally spaced from each other, said metallic band supported to and connecting the outside ends of said fins, and means for supplying cooling air to said tube, said means comprising a rotatable device located adjacent said metallic hub member.

4. In an air cooled thermionic tube, means for transferring heat from said tube to the surrounding air comprising a plurality of casing members, a plurality of fins having a non-uniform curve and arranged to maintain substantially uniform spacing throughout their entire length, the outer ends of said fins terminating and secured to at least one of said casing members, all of said casing members arranged one above the other for confining the air surrounding said tube.

5. A cooling system comprising an electron discharge device having at least an anode and cathode, a metallic sleeve surrounding said anode, a metallic hub member surrounding said sleeve, a metallic band surrounding said hub member, a plurality of slots in said hub member, a plurality of heat radiating fins extending outward and located to be substantially equally spaced from each other, said metallic band supported to and connecting the outside ends of said fins, and means comprising an impeller for supplying cooling air to said tube located adjacent said metallic hub member.

6. In an air cooled thermionic tube, means for transferring heat from said tube to the surrounding air, comprising a plurality of casing members, a plurality of fins arranged to maintain substantially uniform spacing throughout their entire length, the outer ends of said fins terminating and secured to at least one of said casing members, all of said casing members arranged one above the other for confining the air surrounding said tube.

7. In combination, a thermionic tube having at least an anode and cathode, a metallic sleeve in intimate thermal contact with said anode, a metallic hub member surrounding said sleeve, a metallic band surrounding said hub member, a plurality of metallic fins radially extending outwardly from said metallic hub member and joined so said band, an insulating duct disposed below said metallic band, and an impeller for forcing a stream of air to flow between said fins and said duct member so as to confine the air discharge to the area between the fins.

8. In combination, a thermionic tube having at least an anode and cathode, a metallic sleeve in intimate thermal contact with said anode, a metallic hub member surrounding said sleeve, a metallic band surrounding said hub member, a plurality of metallic fins extending outwardly from said metallic hub member and secured to said metallic band, an insulating transparent duct disposed below said metallic band, and an impeller for forcing a stream of air to flow between said fins and said duct member so as to confine the air discharge to the area between the fins.

9. In combination, a thermionic tube having at least an anode and cathode, a metallic sleeve in intimate thermal contact with said anode, a metallic hub member surrounding said sleeve, a metallic band surrounding said hub member, a plurality of metallic fins radially extending outwardly from said metallic hub member and joined to said metallic band, a removable insulating duct disposed below said metallic band, and an impeller for forcing a stream of air to flow between said fins and said duct member so as to confine the air discharge to the area between the fins.

10. An electron discharge device cooling system for use in a radio transmitter, said electron discharge device having at least anode and cathode, a plurality of casing members, a metallic sleeve surrounding said anode, a metallic hub member surrounding said sleeve, a plurality of radiating fins extending out from said metallic hub member and secured to one of said casing members, and means for supplying cooling air to said discharge device, said means comprising a rotatable fan located adjacent said metallic hub member, and a plurality of electrical contacts arranged above said casing connected to said hub member by said radiating fins so as to control an external circuit located on said radio transmitter.

11. A cooling system comprising an electron discharge device having at least an anode and cathode, a plurality of casing members, a metallic sleeve surrounding said anode, a metallic hub member surrounding said sleeve, a plurality of radiating fins extending outwardly from said metallic hub member and secured to one of said casing members, means for supplying cooling air to said discharge device, said means comprising an impeller located adjacent said metallic hub member, and a plurality of electrical contacts located adjacent said metallic hub member, said contacts being secured to one of said casings and arranged in an electrical circuit, a device responsive to temperature connected in said electrical circuit, said temperature-responsive device being connected and so located with respect to said anode that it responds to the temperature of the fins whether the impeller is in operation or not, to control the heat being liberated in the tube anode.

JAMES LESLIE FINCH.