PCT WORLD INTELLECTUAL PROPERTY ORGANIZATION
International Bureau

INTERNATIONAL APPLICATION PUBLISHED UNDER THE PATENT COOPERATION TREATY (PCT)

(51) International Patent Classification 7 :
G11B 27/11, 27/28, 27/10, 27/34, 27/36, G06F 17/30, H04N 5/14, 5/44, 5/445

A1

(11) International Publication Number: **WO 00/05718**

(43) International Publication Date: 3 February 2000 (03.02.00)

(21) International Application Number: PCT/GB99/02338

(22) International Filing Date: 20 July 1999 (20.07.99)

(30) Priority Data:
9815638.3 20 July 1998 (20.07.98) GB

(71) Applicant *(for all designated States except US)*: DANMERE LIMITED [GB/GB]; Whitehall, 75 School Lane, Hartford, Northwich, Cheshire CW8 1PF (GB).

(72) Inventor; and
(75) Inventor/Applicant *(for US only)*: AUSTIN, Kenneth [GB/GB]; Weaverham Grange, 7 Beechwood Avenue, Hartford, Northwich, Cheshire CW8 3AR (GB).

(74) Agent: ROYSTONS; Tower Building, Water Street, Liverpool, Merseyside L3 1BA (GB).

(81) Designated States: AE, AL, AM, AT, AU, AZ, BA, BB, BG, BR, BY, CA, CH, CN, CU, CZ, DE, DK, EE, ES, FI, GB, GD, GE, GH, GM, HR, HU, ID, IL, IN, IS, JP, KE, KG, KP, KR, KZ, LC, LK, LR, LS, LT, LU, LV, MD, MG, MK, MN, MW, MX, NO, NZ, PL, PT, RO, RU, SD, SE, SG, SI, SK, SL, TJ, TM, TR, TT, UA, UG, US, UZ, VN, YU, ZA, ZW, ARIPO patent (GH, GM, KE, LS, MW, SD, SL, SZ, UG, ZW), Eurasian patent (AM, AZ, BY, KG, KZ, MD, RU, TJ, TM), European patent (AT, BE, CH, CY, DE, DK, ES, FI, FR, GB, GR, IE, IT, LU, MC, NL, PT, SE), OAPI patent (BF, BJ, CF, CG, CI, CM, GA, GN, GW, ML, MR, NE, SN, TD, TG).

Published
With international search report.
Before the expiration of the time limit for amending the claims and to be republished in the event of the receipt of amendments.

(54) Title: IDENTIFICATION OF VIDEO STORAGE MEDIA

(57) Abstract

A method of generating data for identifying a video storage media comprising the steps of (1) generating from the contents of the media a data sequence representing the picture and/or the audio and/or data content of the video medium, (2) combining said data sequence with position information and/or picture and/or text and/or data or other information. It also provides a system for controlling a video recorder or other media device for selective enabling and disabling of associated functions. A graphical user interface is adapted to display information relating to television program content and/or data content from other sources such as the Internet and video recorder or other media device content and to display information relating to one or more video tapes or other media contents.

FOR THE PURPOSES OF INFORMATION ONLY

Codes used to identify States party to the PCT on the front pages of pamphlets publishing international applications under the PCT.

AL	Albania	**ES**	Spain	**LS**	Lesotho	**SI**	Slovenia
AM	Armenia	**FI**	Finland	**LT**	Lithuania	**SK**	Slovakia
AT	Austria	**FR**	France	**LU**	Luxembourg	**SN**	Senegal
AU	Australia	**GA**	Gabon	**LV**	Latvia	**SZ**	Swaziland
AZ	Azerbaijan	**GB**	United Kingdom	**MC**	Monaco	**TD**	Chad
BA	Bosnia and Herzegovina	**GE**	Georgia	**MD**	Republic of Moldova	**TG**	Togo
BB	Barbados	**GH**	Ghana	**MG**	Madagascar	**TJ**	Tajikistan
BE	Belgium	**GN**	Guinea	**MK**	The former Yugoslav Republic of Macedonia	**TM**	Turkmenistan
BF	Burkina Faso	**GR**	Greece			**TR**	Turkey
BG	Bulgaria	**HU**	Hungary	**ML**	Mali	**TT**	Trinidad and Tobago
BJ	Benin	**IE**	Ireland	**MN**	Mongolia	**UA**	Ukraine
BR	Brazil	**IL**	Israel	**MR**	Mauritania	**UG**	Uganda
BY	Belarus	**IS**	Iceland	**MW**	Malawi	**US**	United States of America
CA	Canada	**IT**	Italy	**MX**	Mexico	**UZ**	Uzbekistan
CF	Central African Republic	**JP**	Japan	**NE**	Niger	**VN**	Viet Nam
CG	Congo	**KE**	Kenya	**NL**	Netherlands	**YU**	Yugoslavia
CH	Switzerland	**KG**	Kyrgyzstan	**NO**	Norway	**ZW**	Zimbabwe
CI	Côte d'Ivoire	**KP**	Democratic People's Republic of Korea	**NZ**	New Zealand		
CM	Cameroon			**PL**	Poland		
CN	China	**KR**	Republic of Korea	**PT**	Portugal		
CU	Cuba	**KZ**	Kazakstan	**RO**	Romania		
CZ	Czech Republic	**LC**	Saint Lucia	**RU**	Russian Federation		
DE	Germany	**LI**	Liechtenstein	**SD**	Sudan		
DK	Denmark	**LK**	Sri Lanka	**SE**	Sweden		
EE	Estonia	**LR**	Liberia	**SG**	Singapore		

Title: Identification of video storage media

The present invention relates to a method and apparatus for identifying video storage media recorded on video tape or other video storage media, and to an index for same and a method of generating same.

In our co-pending U.K. Patent Application No. 9802415.1 we describe among other things a method of applying frame identification codes to video tape by recording data in the vertical blanking interval between each frame or at prescribed intervals. The frame identification code makes it possible to identify a particular location on the tape. This in turn makes it possible to locate a particular item recorded on the tape using an automatic tape control system which reads the tape frame coding. By this means the tape can be moved backwards and forwards until the desired location is found. Coding is used in association with an index of the contents of the tape correlated to the codes recorded on the tape. This coding system has to be applied as the tape is being recorded. Thus the system cannot be used for pre-recorded tapes.

The present invention aims to provide a means of identifying video material, especially frames of a video tape but without limitation to same, but which does not require identification data to be physically recorded on the video storage media, be it a tape or other media. Another aim of the invention is to provide means of identifying a video frame or a sequence of frames which can be used with pre-recorded video storage media, be it tapes or other video storage media. It is a further aim of the invention to identify a frame or a sequence of frames from a video tape

storage medium, eg a tape or other video storage media which can be used during recording thereof. Yet another aim of the present invention is to provide a means to enable automatic cataloguing and indexing of pre-recorded video media be it tape or other video storage media. Yet another aim of the invention is to provide a means of automatic identification of a video storage media from a plurality of media. Yet another aim of the present invention is to provide a better system for cataloguing video contents.

Accordingly, one aspect of the present invention proposes identifying a video storage media having regard to the contents thereof be it the visible content, the audio content or close caption data or signals recorded on a video media, and using any of said contents to generate a data sequence for identifying the video storage media and its contents.

More preferably, the contents of a video frame are used to generate a frame value which is stored in a memory. The analysis of the frame contents can take place in playback mode in the case of a pre-recorded video storage media or during recording of the video storage media. By repeating the analysis for all the frames of the video media or, less preferably a sequence of frames at known intervals, a series of frame value sequences can be created and stored in memory. The analysis of any one frame may not result in a unique value, but the analysis of a sequence of frames is less likely to be repeated. It is intended that the sequences are correlated to particular events on the storage media by a user or more preferably automatically as described further hereinafter.

On a subsequent reading of the video storage media, at any given position

corresponding frame value sequences can be obtained using the same method as that used to create the frame value sequences in the first instance. The frame value sequence obtained at that particular position of the video storage media can then be compared with the frame value sequences stored in memory. This should result in a match and thereby identify the video storage media, its contents and the current position of the storage media. It is assumed that there will be some recorded frames to permit identification. Once the current position is known the storage media can be positioned at a desired location using an automatic control programme

The invention is applicable to any medium which can be used to store video, be it magnetically or optically. Currently the most popular medium is video tape but the likes of Digital Versatile Disk (DVD) are gaining popularity. The references hereinafter to tape refer to one particular application but are not to be taken as limiting.

Another aspect of the invention provides a method of generating data for identifying a video storage media, be it a video tape or other media, comprising the steps of:-

(1) generating from the contents of the media a data sequence representing the picture and/or the audio and/or data content of the video storage media, and

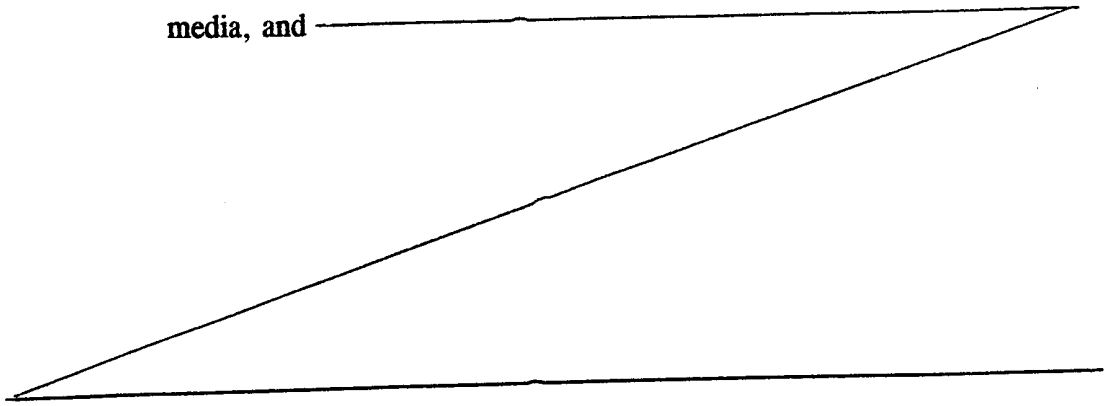

(2) combining said data sequence with position information and/or picture and/or text and/or data or other information.

Yet another aspect of the invention proposes a method of using a data sequence or signal derived from and related to the contents of a video storage medium (hereinafter referred to as a related off-media data sequence) to determine the position and/or the contents of the video medium.

A still further aspect of the invention provides to a method of identifying a video storage medium by generating at least one data sequence from the content of the storage medium and comparing the resulting data sequence with a series of data sequences stored in memory with the aim of establishing a match or a relationship.

A yet further aspect of the invention provides an index of video storage media contents stored in electronic memory or on video storage media, and comprising a plurality of images corresponding at least in part to the contents of the video storage medium at different positions thereof, and wherein the index is adapted to be read and displayed on a television screen.

Another aspect of the invention provides a method of accessing material recorded on a video storage medium comprising recovering from memory an index of the storage medium contents and displaying on a television screen in the form of a plurality of images corresponding to different positions of the storage medium, with or without accompanying text, each image having an associated data sequence or data value which defines its position on the video storage medium and wherein selection of one of the images instigates a search for the corresponding position on the video storage medium preferably by determining the current position of the medium and

comparing the resulting data sequence with a series of data value sequences stored in memory until a match is found or a relationship is established, and comparing the location thereof with the location of the selected position and instigating operation of the video player transport according to programmed control to locate the desired position.

A video frame comprises an array of pixels each having a particular value which will create the overall frame image. Whilst all of these pixels could be used to generate a frame value for example by thresholding the individual pixels and summing the result, this could be susceptible to VCR tracking artifacts at the top or bottom of the video image. Accordingly, we propose to select a reduced number of pixels and these may be from a discrete array within the overall array or from discrete positions within the overall array. For example our preferred proposal is to ignore the top 50 and bottom fifty video lines. The remaining area will be divided into blocks of pixels. Each 20 x 20 block contains 400 pixels, a value is computed for each block by summing all 400 pixels then dividing by 400, the resulting value for each block will be compared with the corresponding value from the previous video frame. The block that is most different from the corresponding position in the previous frame will be the block chosen to represent the current frame, its difference value and X, Y co-ordinates are stored in a memory means. This operation is continued for a sequence of frames thereby creating a frame value sequence. The resulting frame value sequence is stored in memory.

In relation to correlating frame value sequence with tape contents it is preferred that as the analysis of the frame contents is taking place to generate the

frame value sequences, the actual contents of some of the frames are stored in memory. The contents stored will preferably include the visual content of at least one frame. More preferably a sequence of frame images are stored in memory. Optionally the associated audio signal is also stored. The frames which are stored are conveniently selected automatically during the analysis at spaced intervals throughout the duration of the tape - say every 5 minutes. By this means a sequence of frames representing a short snap-shot of the content of the tape at each of these positions is stored in memory. The snap-shot need only be a few seconds long or may be a single still video frame. All snap-shots or still images are preferably stored in memory to enable a plurality of them to be simultaneously displayed on a television monitor. Programming software is provided to achieve this. A remote hand set provides a convenient means of selecting available options from an on-screen menu, including the facility to review the associated sequence of frames stored in memory or to commence viewing the video at a position corresponding to the image displayed. This is achieved by an automatic playback facility which utilises the above described frame analysis to compare the current position of the video tape with the desired position (corresponding to the frame value sequence assigned to the selected frame) and operate the video cassette transport preferably using the I/R control commands under programmed CPU control to operate fast forward, rewind and play modes until the desired location is obtained. The preferred operation is in conjunction with VCR characterisation data discussed in our earlier application in relation to utilisation of tape position information to achieve automatic tape control.

The resulting lead image for the plurality of snap-shots of a tape will provide

the viewer with an overview of the entire contents of the tape. The images may occupy more than one screen depending on the length of the tape and the frequency of the images. Forward and back commands are available to review all the recorded frames of the tape in question. By taking the snap-shots at regular intervals the viewer can assess the duration of any particular item and the space available for recording other items. For a tape of three hours duration - snap-shots every 5 minutes may be deemed sufficient. The programming software and associated options menu may allow the user to add text to the images - for example content related information such as a title - or optical character recognition (OCR) software running on the CPU can be employed to automatically extract program information from the video images. If only part of the tape has been recorded, the frame analysis procedure will identify unused tape portions. This allows the system under direction of the user to advance the tape to an unrecorded location to commence a new recording. More preferably the programming menu provides for sections of tape which are blank or which can be recorded over, to be marked permitting an auto record function. The associated control circuitry can use the frame position information to compute the duration of any recording and the space available for subsequent recording.

Providing a visual representation of the tape contents provides a better system for cataloguing the video contents. The cataloguing and indexing of pre-recorded video cassettes can be done automatically. After analysis, pictures, text and data related to the video media contents are preferably automatically written to a memory means. Said data preferably includes the amount of blank media available for

recording new material.

Existing set top boxes allow electronic programming guides to be imported and the information to be displayed on screen. Some programming options also allow the user to mark programs of interest and the software will generate a reminder, usually an on-screen reminder, so that the user can change to the appropriate channel. Other systems will automatically trigger actuation of a video cassette recorder. However, the user has to ensure that a tape is in place and that it is in a suitable place for recording to commence, i.e. to ensure that there is sufficient space for the intended recording without recording over any material of interest.

By utilising the tape position information and the indexing instruction and associated programming software and in conjunction with the imported electronic program data, the duration of a program to be recorded and the available space, for example as a tape, can be correlated and the viewer presented with appropriate information and if there is insufficient unrecorded space an option for recording over existing material or inserting another tape.

Accordingly another aspect of the invention provides an on-screen display of tape contents retrieved from memory and comprising a plurality of images retrieved from different portions of the tape in question and/or any text or data relating thereto.

More particularly associated VCR control circuitry operates in conjunction with tape position information determined from reading the tape and correlated with data stored in memory regarding the position of each of said images to position the tape at a position corresponding to the location of a selected one of the images. More particularly still, the memory contains information on the contents of a plurality of

tapes which contents can be displayed selectively. The contents of the tape displayed may be selected manually or automatically. Automatic selection is achieved by placing a video tape in an associated VCR and reviewing a sequence of frames to generate a frame value sequence which is compared with frame value sequences stored in memory, when a match is found the relevant information is displayed.

Another aspect of the invention provides a closed loop video recorder or other media device control system for determining the status of a video recorder or other media device, consisting of the steps of, (1) issuing a play command or code or sequence, (2) verifying that signals or data are received, (3) using said signals or data or absence of signals or data to determine if said video recorder or other media device is powered on.

Preferably the closed loop control system further comprises the steps of, (1) checking that the tape or media position is substantially unchanged from a predetermined position, (2) issuing a record command or code or sequence. More preferably still, the closed loop control system further comprises the step of verifying the signals or data received from said video recorder or other media device correspond to a selected program designated for recording.

Yet another aspect of the invention provides a system for controlling a video recorder or other media device for selective enabling and disabling of associated functions, comprising the steps of, (1) periodically assessing the presence or content of signals and/or data output from said video recorder or other media device to determine if device is operating, (2) determining if said video recorder or other media device is scheduled and/or permitted to operate at time of assessing signals and/or

data, (3) if required issuing a command or code or sequence to disable said video recorder or other media device by a power off command and/or a stop command and/or a pause or other command.

Yet another aspect provides a graphical user interface adapted to display information relating to television program content and/or data content from other sources such as the Internet and video recorder or other media device content, wherein selections are made from said television program content and/or data content from other sources fro recording onto video tape or other media whereby calculation of available free space on said video tape or other media is displayed and whereby if insufficient space is available for recording original selections may be modified and/or some or all or the video tape or other media contents may be selected for overwriting.

Preferably the graphical user interface is adapted to display the status of items recorded on video tape or other media as to whether the recorded item has been viewed. More preferably the graphical user interface is adapted to display information relating to one or more video tapes or other media contents, wherein the contents of said video tape or other media is displayed either graphically (could be video frames) or texturally according to the category of the recorded material, said category could be the type of recorded material or whether the item is suitable for a particular age of viewer or whether the items have been viewed or any other criteria.

A still further aspect of the invention provides a graphical user interface adapted to display information relating to television program content and/or data content from other sources such as the Internet and/or video recorder or other media device content, wherein said display information comprises a visual representation

such as a picture indicating the contents of said television program content and/or data content from other sources such ad the Internet and/or video recorder or other media device content.

More preferably the graphical user interface is adapted to display television program content information by category such as what is currently showing and/or what will be showing next and/or what is showing that day and/or what will be showing that week. Preferably, the visual representation is downloaded from the program provider and stored in memory. Preferably the graphical user interface is further adapted to filter said television program content by category of user preferences such as channel number or type of television program or other category.

A yet still further aspect of the invention provides a video recorder or other media device index generation method comprising the steps of, (1) recording a television broadcast, (2) recording in a memory means a copy of subtitling or closed caption data, (3) using said subtitling or closed caption data to search for key words or phrases to identify a scene from one or more video tapes or other media corresponding to said key word, (4) issuing a command or code or sequence to position said video tape or other media at the scene corresponding to said key word.

The present invention will now be described further by way of example only with reference to the accompanying drawings in which:-

Figure 1 illustrates in simplified block diagram of the present system,

Figure 2 is a more detailed block diagram showing the mapping to frame sequence values feature,

Figure 3 illustrates diagrammatically part of a video frame showing how it is

made up of pixels,

Figure 4 is a diagram representing the lines produced by an analogue television signal,

Figure 5 is a formula for generating a value block of 20 x 20 pixels,

Figure 6 is an illustration of block arrays for two video frames,

Figure 7 is an illustration of one block array,

Figure 8 is an illustration of the processes used when recording new video material or analysing a pre-recorded tape,

Figure 9 is an illustration of the processes used for identifying a tape and its contents,

Figure 10 is an illustration of the steps involved in analysing a tape and creating a data base in memory,

Figure 11 illustrates the steps involved in identifying a tape,

Figure 12 illustrates one embodiment of screen display,

Figures 13a and 13b illustrate two screen display options, and

Figure 14 illustrates in simplified form another apparatus for implementing the described invention.

The various aspects of the invention will be described hereinafter, by way of example only, in relation to an application where the video storage media is a video cassette tape. Their application to other video storage media will be apparent to one skilled in the art.

Referring firstly to Figure 1, illustrated pictorially is a video cassette recorder VCR, and a television TV and in block form within the dotted outline STB various of

functional units. These functioned units conveniently form part of a set top box, but could be incorporated within either the video cassette recorder or the television or any other associated hardware. The functional units comprise an analogue digital converter ADC, a central processing unit CPU, a memory M, a video system VS and an infra-red control unit IR. This configuration corresponds substantially to that disclosed in our earlier patent application in relation to controlling tape position, storing details of tape contents and utilising on-screen displays to review tape contents and to select an appropriate positions for replay or recording of a tape. These aspects are not described further hereinafter as they are discussed fully in our earlier patent application.

Figure 2 shows all the apparatus features of Figure 1 plus the further functional units required to determine the frame values and to subsequently determine tape position. The further functional units comprise a mapping circuit MC, a filter circuit F, a data base DB, and a controller C. The operation will be described further hereinafter.

In Figure 3 we illustrate part of a video frame comprising a 625 x 800 pixel array designated X_1, X_2, X_3, ... X_{800} and Y_1, Y_2, Y_3 ....Y_{625}. Any particular pixel can be defined using *xy* coordinates. In a preferred method of generating a frame value we select blocks of 20 x 20 pixels, each block is assigned a value according to the formula illustrated in Figure 5 representing a single video frame. These values are then compared with the corresponding values generated for the previous video frame as illustrated in Figure 6. The value that has changed the most compared to the previous frame and the X, Y co-ordinates thereof are stored in Dbase memory of

Figure 8 along with pictures and information representing the tape, its position and other information such as picture, text or data. Subsequent frames or groups of frames are similarly analysed as shown in the flow chart of Figure 10 until a data sequence has been formed that represents the entire video tape. This sequence can be generated during record or for pre-recorded tapes by playing the tape and analysing its contents.

Figure 9 and the flow chart of Figure 11 illustrate the process of identifying a tape, its contents, status and position. Signals from the VCR can be compensated for horizontal or vertical offsets by the XY offset prior to entering the calculation of summed pixel blocks according to Figure 5 and array blocks of Figure 9. Difference values are again calculated, but here all or most values are retained and stored in Store of Figure 9 for comparison with previously calculated single frame values in Dbase memory. The comparison process consists of extracting from Dbase memory of Figure 9 the X, Y co-ordinates of the best value stored according to the processes of Figure 8. These co-ordinates are used to index the current difference value from Store of Figure 9, its value is extracted and compared to the corresponding value held in Dbase memory of Figure 9. This process is repeated for a sequence of values until the best match is found. A best matching sequence is used to extract further information from the Dbase memory to indicate the tape, its contents, position and pictures text or data.

Referring now to Figure 12, when it is desired to utilise the likes of an automatic tape positioning mechanism to transport the tape to a desired location it is first necessary to identify the tape which is loaded into the video cassette recorder and

its contents and the current position of the tape so that the desired position can be achieved with the minimum of user interference. Thus the first step is to generate a sequence of frame values from the tape. This is performed automatically by the system and follows steps 1 to 4 of Figure 11 and is represented by store of Figure 9. Once a frame sequence has been obtained this has to be compared with the frame sequences stored in memory in order to find a match. Thus at step 7 the controller selects a first frame value sequence from those stored in memory. One such frame value sequence is represented diagrammatically at 6'. At this stage the computer is merely concerned with the frame value sequence. In practice other information will be appended to that record, for example program identification data. In any event its location in memory may be used to indicate the relative position of the identified section of tape. The frame value sequence retrieved from memory is compared at Step 8 with that obtained from the tape. If there is a match then the tape has been identified and an appropriate display initiated. Usually this will be details of the contents on that tape. If no correlation has been found the search continues. Step 9 represents incrementing of a memory pointer so that when Step 7 comes around next time, the next frame value sequence is recovered from memory. Step 10 checks to see whether the last frame value sequence has been reached and aborts the search if yes and causes an appropriate message to be displayed. If not, then the search continues on an incremental basis working through all the frame values sequences stored in memory (see loop 11) until either a match is found at Step 8 or the stored memory sequences have been searched and no match found in which case the sequence is aborted and an appropriate message is generated for example error or tape

not identified.

There is now described the creation of a table of contents for a tape which may be used to advantage in conjunction with the afore-described tape position information. Figure 14 illustrates apparatus which has all the features of the apparatus of Figures 1 and 2 and hence it is not described in any detail in those respects. Corresponding reference numerals have been used to denote corresponding parts. Thus the afore-described controller database, adc, mapping filter circuitry can be regarded as part of the CPU and a encoder 2. Also illustrated is, a decoder 3, a tuner T, an output line 7a and input lines 7b and 7c.

The tuner is provided for decoding television signals for viewing on the T.V. or recording on the VCR. Line 7b provides an optional input for an external video signal and line 7a provides an optional input for external data such as a phone line which may be connected to an Internet site. Line 7a is an optional decoded data output.

In analysing the frames of the video to determine the frame value sequences, the actual contents of whole frames both video and audio is also preferably written to memory at periodic intervals. In fact this could be done independently of calculating frame value sequences where it is merely desired to create a useful tape index independent of tape position information. For example where automatic tape control is not required. Alternatively other methods of tape position could be used. More particularly, for example every 5 minutes of tape play time, a sequence of frames are recorded in memory. More preferably these will have appended to them the relevant frame value sequences or other tape position data. The number of frames stored in

memory may be sufficient to play a few seconds of the recorded material or just a single video frame.

This results in the creation of a table of contents for the tape which is represented by what can be conveniently termed a plurality of snap-shots of the tape contents taken at discrete intervals throughout the tape. Preferably the lead image will have a sequence of further images associated with it corresponding to the next few seconds of frames. The lead images are stored in memory so that they can be displayed on screen simultaneously or at least a plurality thereof, for example in a format as illustrated in Figure 12. Displayed on the screen 100 are twelve pictures. In this example pictures 4 - 11 are blank. Some of the sequence of frames associated with picture 1 are shown at b and c. An associated audio signal is shown at d. Shown displayed at the right hand side of the screen 100 at 102 - 106 and along the bottom at 107 are some control menu options. These are described further hereinafter.

It will be understood that the memory M contains characterisation data for the VCR as well as details of the tape contents and the control program. The CPU runs the software. Selection of the options displayed on screen is by movement of cursor 101 controlled by a remote key pad or by a mouse. Clicking on 105 or 106 enables the viewer to see more screens of tape images. These may be for the same tape where there are more images than can be accommodated on one screen or they may be for the contents of other tapes which are stored in memory. Moving the cursor over one of the images displayed will play the associated sound and/or frame sequence. Clicking on a picture instigates an auto play command which utilises the

available tape position data and the VCR transport controls to locate the chosen frame on the tape and commence replaying of the tape. When tape position data is not recorded on the tape the above discussed technique of calculating frame value sequence is used to determine the current position and thereafter to locate the desired position as otherwise discussed in our earlier patent application.

On switching to VCR play or replaying of the sequence from memory, an alternative screen display is adopted as shown in Figure 13a. The user has the option to go to a full screen display as shown in Figure 13b by clicking on 108 and thereafter to revert to the display of Figure 13a by clicking on 111. Clicking on 109 stops the play mode. Clicking on 110 reverts to the index display with so called thumbnail pictures.

Other options on the index display include selection of TV guide or VCR screen - see 104 and 103 respectively. Other options with regard to record functions can be achieved through the menu options which are not described further herein.

The audio track or Closed Caption data could alternatively be used to generate data sequences that identify a tape and its contents. Closed Caption data is already in a digital form and could be correlated with tape position data in the memory Dbase. For audio signals the phase of the audio component is usually corrupted by the VCR recording and play back circuits. Auto-correlation is a well known technique that can be employed to place the audio components into a predetermined phase relationships for pattern matching. Closed Caption data could also be deployed for automatic titling. It should be obvious to one skilled in the art how other techniques such as hamming codes could be applied to generate data sequences representing audio,

picture or data content of the video tapes. It is not intended to limit the scope of this patent to storing difference values based on summing pixels, or to video cassettes.

Where automatic control provisions exist the programming circuitry includes means to determine the status of the media device to verify that it is switched on when so required and to check that the video media is in the appropriate position and that the selected material to be recorded is being recorded. When record functions have been selected to be initiated automatically at some future time, means is provided to disable the operation of the device, in the meantime.

Where items are recorded on video tape, means is provided to indicate visually to the viewer whether they have been viewed, thereby indicating for example whether they are available for recording over.

As regards the contents of the video tape which are stored in memory, it is advantageous if the index includes a facility for categorisation of the program material. Conveniently means is provided for displaying the contents of a selected category.

The facility to store images representing the content of a video medium - e.g. any one tape, in the form of a visual representations as described hereinabove can be extended to program providers so that electronic program guides may include such visual representation of program currently being shown or to be shown at a future date. The images for any one or for all or a plurality of programmes currently being shown could be displayed on screen and from which a user would make a program viewing or recording selection. Again the program material may advantageously categorised and means provided to display only a selected category or categories.

Subtitles or closed caption data may be stored as part of the program contents of recorded media and means provided to search same to identify and display media contents in that category.

CLAIMS

1. A method of generating data for identifying a video storage media comprising the steps of (1) generating from the contents of the media a data sequence representing the picture and/or the audio and/or data content of the video medium, (2) combining said data sequence with position information and/or picture and/or text and/or data or other information.

2. A method as claimed in claim 1 in which a video frame signal is converted into an array and the part of the frame being analysed comprises a discrete array taken from the whole frame array.

3. A method as claimed in claim 1 or 2 in which the video frame is converted into a blocked array of summed pixel values.

4. A method as claimed in claim 3 in which the block array is compared with the block array of the previous frame and the value that is most changed is stored as a frame value.

5. A method as claimed in anyone of claims 1 to 4 when used to create a series of data sequences for a plurality of video storage media.

6. A method as claimed in anyone of claims 1 to 5 in which some of the data sequences which are stored in memory have appended thereto data which facilitates reproduction of the image of at least one frame of the sequence.

7. A method as claimed in claim 6 in which the memory contains stored images of a plurality of frames taken from discrete intervals along the video medium.

8. A method as claimed in claims 6 or 7 and further comprising storing audio

signals associated with at least some of said data sequences.

9. A method of generating data for identifying a video storage media as claimed in anyone of claims 1 to 8 comprising the steps of (1) reading a video storage medium and generating an electronic signal of at least part of each frame of a sequence frames of the video tape, (2) using the signal to generate a frame value for each frame in the sequence, and generating and storing a resulting frame value sequence, and (5) repeating the process for further frames of the video storage medium to generate a series of frame value sequences which are stored in memory.

10. A method as claimed in anyone of the preceding claims in which the video storage media is a video tape.

11. A method of identifying a video storage media by generating at least one data sequence from the content of the storage media and comparing the resulting data sequence with a series of data sequences stored in memory with the aim of establishing a match or relationship.

12. A method of using a related off-media data sequence or signal to determine the position and/or contents of a video tape.

13. A method of generating video storage media data substantially as hereinbefore described with reference to the accompanying drawings.

14. An index of video storage media contents stored in electronic memory or on video storage media, be it magnetic or optical, the index comprising a plurality of images corresponding to each of the contents of the a video storage medium at different positions thereof and wherein the index is adapted to be

read and displayed on a television screen, enabling the selection of one or more of a plurality of scenes of the recorded content.

15. An index as claimed in claim 14 in which more than one of the plurality of images are visible simultaneously.

16. A method of accessing material recorded on a video storage media comprising recovering from memory an index of the storage media contents and displaying on a television screen in the form of a plurality of images corresponding to different positions of the storage media, with or without accompanying text, each image having an associated data sequence or data value which defines its position on the video storage media and wherein selection of one of the images instigates a search for the corresponding position on a storage media by determining the current media position and comparing the resulting data sequence or data value with a series of data sequences or data value stored in memory until a match or a relationship is established and comparing the location thereof with the location of the selected position and instigating operation of the video storage media recorder transport according to programmed control to locate the desired position using characterisation data from the video storage media recorder or further position checks.

17. Apparatus when used to perform anyone of the methods of claims 1 to 16.

18. A closed loop video recorder or other media device control system for determining the status of a video recorder or other media device, consisting of the steps of, (1) issuing a play command or code or sequence, (2) verifying

that signals or data are received, (3) using said signals or data or absence of signals or data to determine if said video recorder or other media device is powered on.

19. A close loop control system as claimed in claim 18 further comprising the steps of, (1) checking that the tape or media position is substantially unchanged from a predetermined position, (2) issuing a record command or code or sequence.

20. A closed loop control system as claimed in 18 or 19 further comprising the step of verifying the signals or data received from said video recorder or other media device correspond to a selected program designated for recording.

21. A system for controlling a video recorder or other media device for selective enabling and disabling of associated functions, comprising the steps of, (1) periodically assessing the presence or content of signals and/or data output from said video recorder or other media device to determine if device is operating, (2) determining if said video recorder or other media device is scheduled and/or permitted to operate at time of assessing signals and/or data, (3) if required issuing a command or code or sequence to disable said video recorder or other media device by a power off command and/or a stop command and/or a pause or other command.

22. A graphical user interface adapted to display information relating to television program content and/or data content from other sources such as the Internet and video recorder or other media device content, wherein selections are made from said television program content and/or data content from other sources

for recording onto video tape or other media whereby calculation of available free space on said video tape or other media is displayed ad whereby if insufficient space is available for recording original selections may be modified and/or some or all or the video tape or other media contents may be selected for overwriting.

23. A graphical user interface is adapted as claimed in 22 adapted to display the status of items recorded on video tape or other media as to whether the recorded item has been viewed.

24. A graphical user interface is adapted to display information relating to one or more video tapes or other media contents, wherein the contents of said video tape or other media is displayed either graphically or texturally according to the category of the recorded material, said category could be the type of recorded material or whether the item is suitable for a particular age of viewer or whether the items have been viewed or any other criteria.

25. A graphical user interface adapted to display information relating to television program content and/or data content from other sources such as the Internet and/or video recorder or other media device content, wherein said display information comprises a visual representation such as a picture indicating the contents of said television program content and/or data content from other sources such ad the Internet and/or video recorder or other media device content.

26. A graphical user interface as claimed in claim 25 in which said visual representations are stored in memory, at least temporarily, to permit on-screen

display.

27. A graphical user interface as claimed in claims 25 or 26 wherein the graphical user interface is adapted to display program content information by category such as what is currently showing and/or what will be showing next and/or what is showing that day and/or what will be showing that week.

28. A graphical user interface adapted to display information as claimed in claims 25, 26 or 27 further adapted to filter said television program content by category of user preferences such as channel number or type of television program or other category.

29. A video recorder or other media device index generation method comprising the steps of, (1) recording a television broadcast, (2) recording in a memory means a copy of subtitling or closed caption data, (3) using said subtitling or closed caption data to search for key words or phrases to identify a scene from one or more video tapes or other media corresponding to said key word, (4) issuing a command or code or sequence to position said video tape or other media at the scene corresponding to said key word.

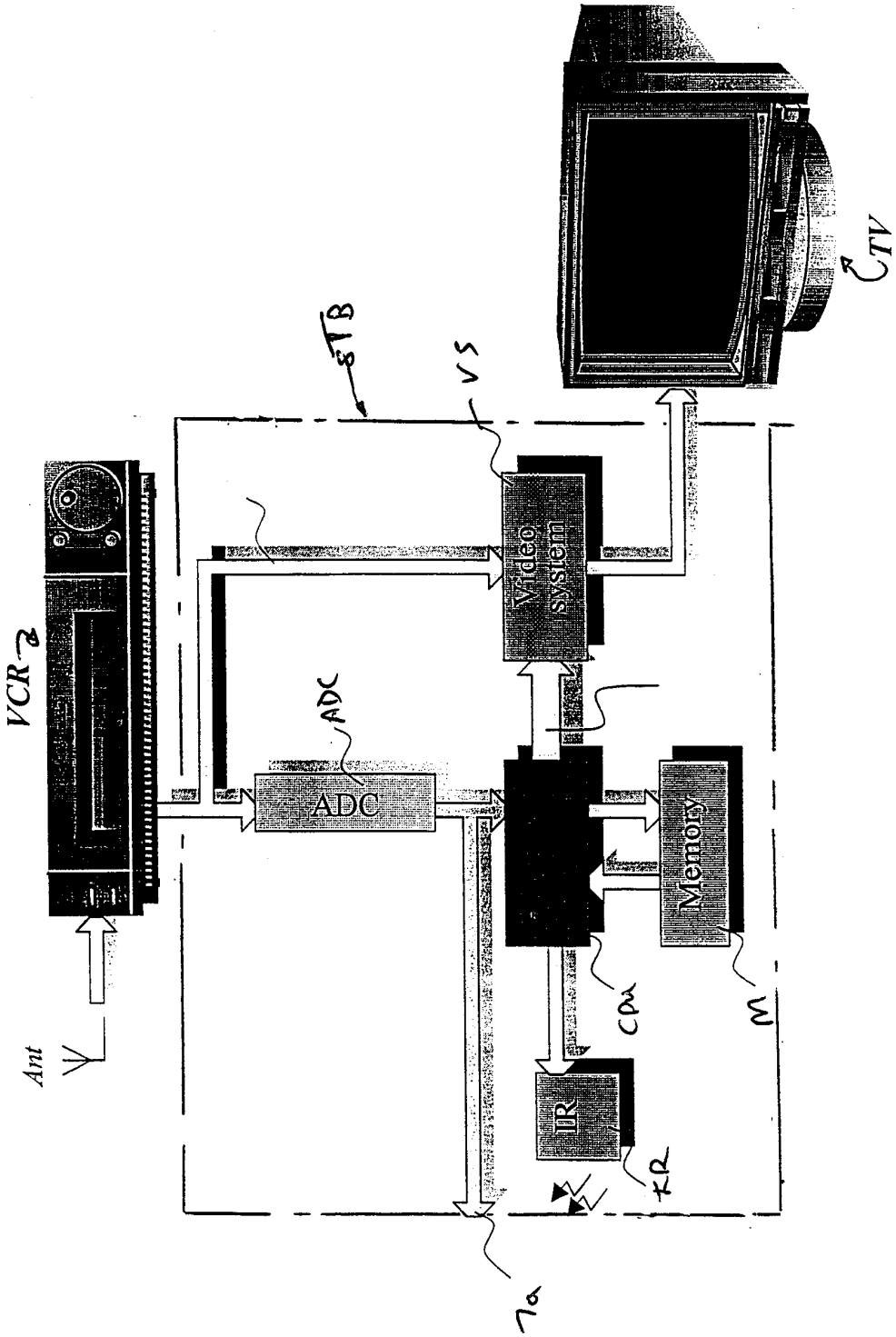

Fig 1

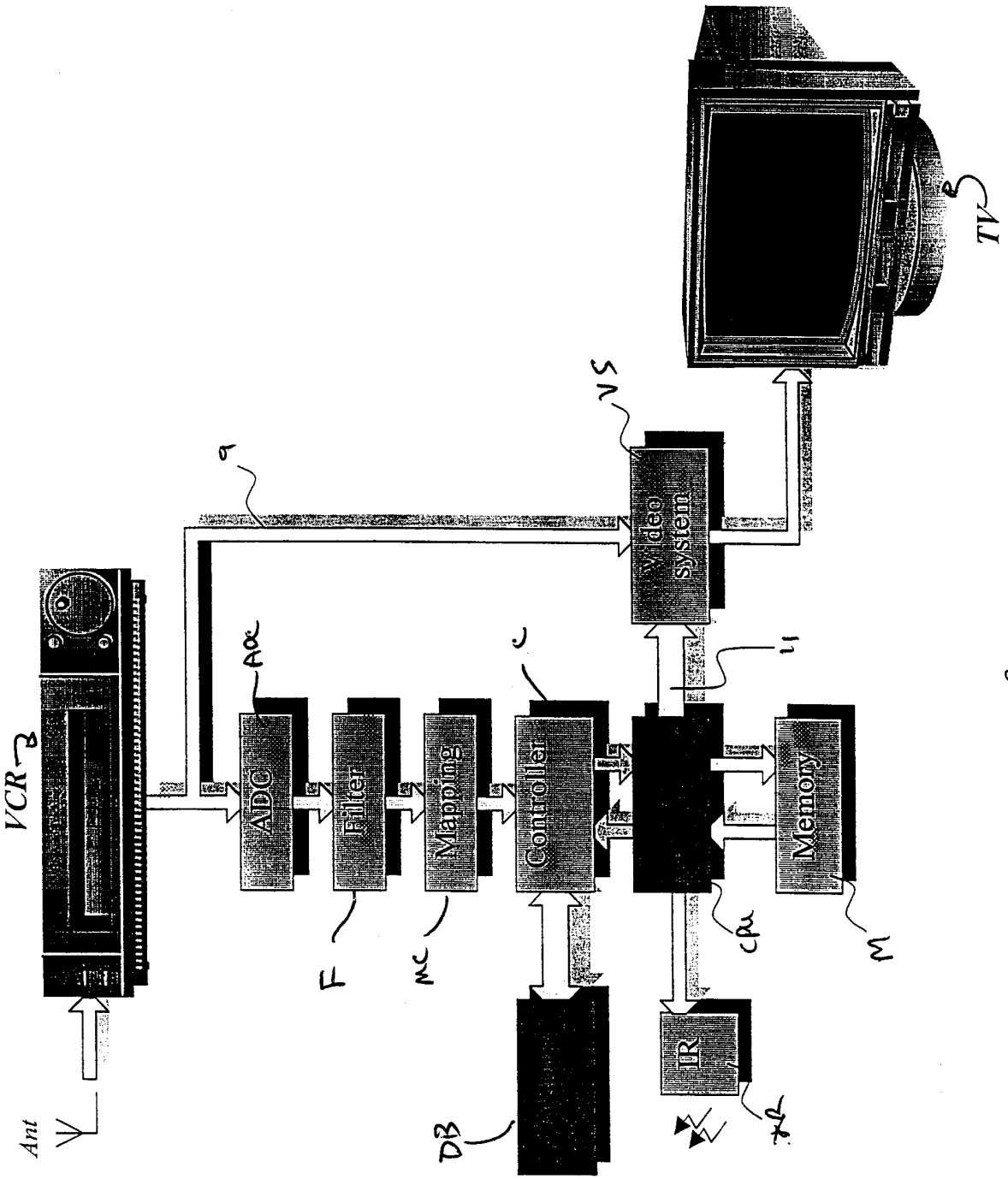
Ant
VCR
ADC
Filter
Mapping
Controller
Video system
Memory
IR
TV
DB
F
MC
CPU
M
VS
9
11

Fig 2

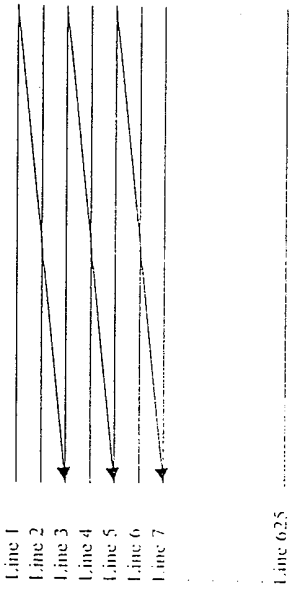

Fig 4

$$V_{x,y} = \sum_{n=0}^{19} \sum_{m=0}^{19} PIXEL_{x,y}$$

Fig 5

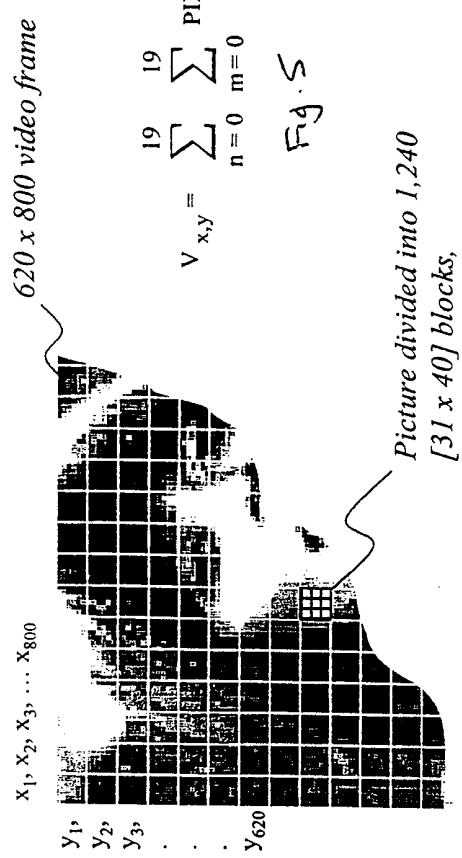

Fig 3

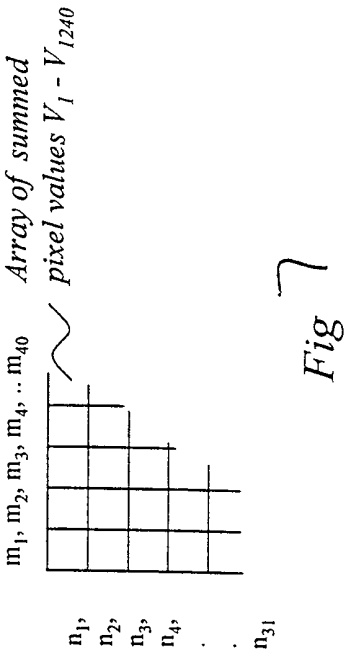

Fig 7

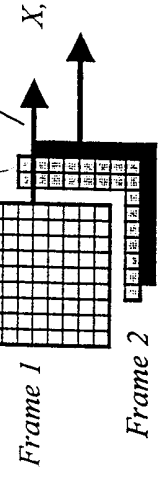

Fig 6

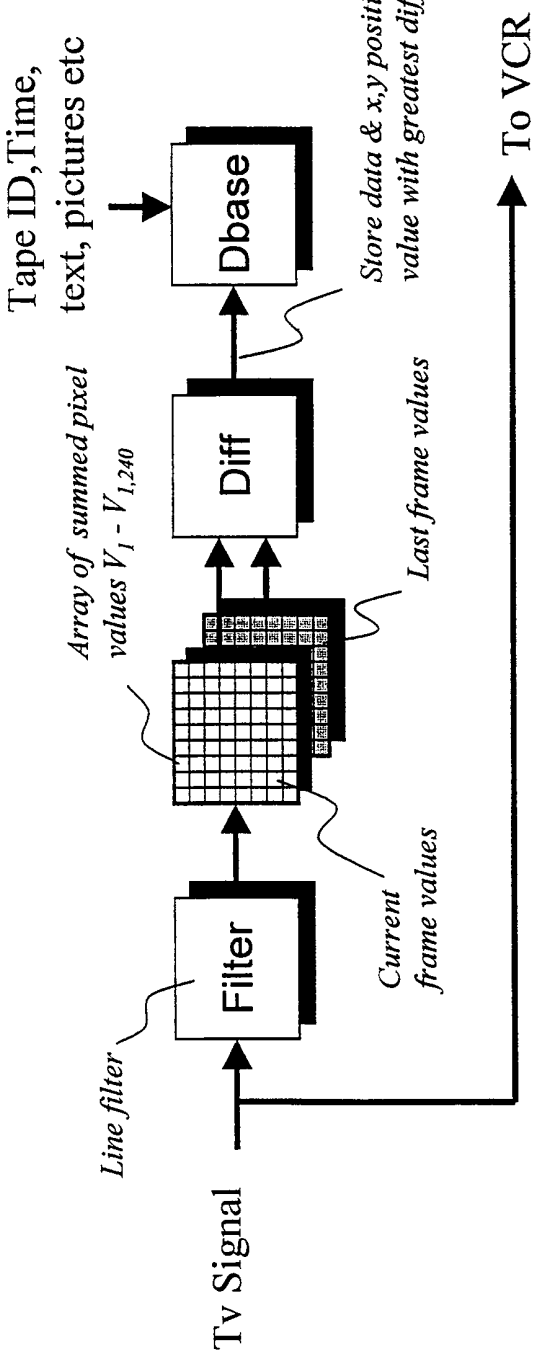
Tape ID,Time,
text, pictures etc
Dbase
Diff
Filter
Tv Signal
Line filter
Array of summed pixel values V_1 - $V_{1,240}$
Current frame values
Last frame values
Store data & x,y position of single value with greatest difference
To VCR

Fig 8

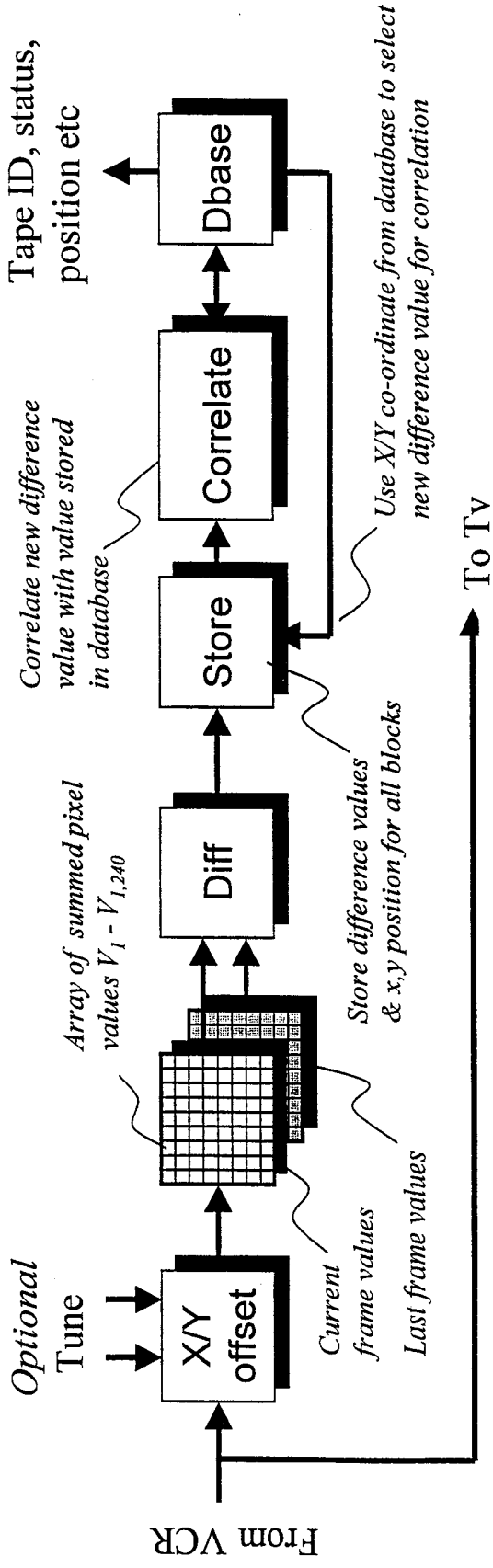
Tape ID, status,
position etc
Dbase
Correlate
Store
Diff
X/Y offset
Optional
Tune
From VCR
Array of summed pixel values V_1 - $V_{1,240}$
Current frame values
Last frame values
Store difference values & x,y position for all blocks
Correlate new difference value with value stored in database
Use X/Y co-ordinate from database to select new difference value for correlation
To Tv

Fig 9

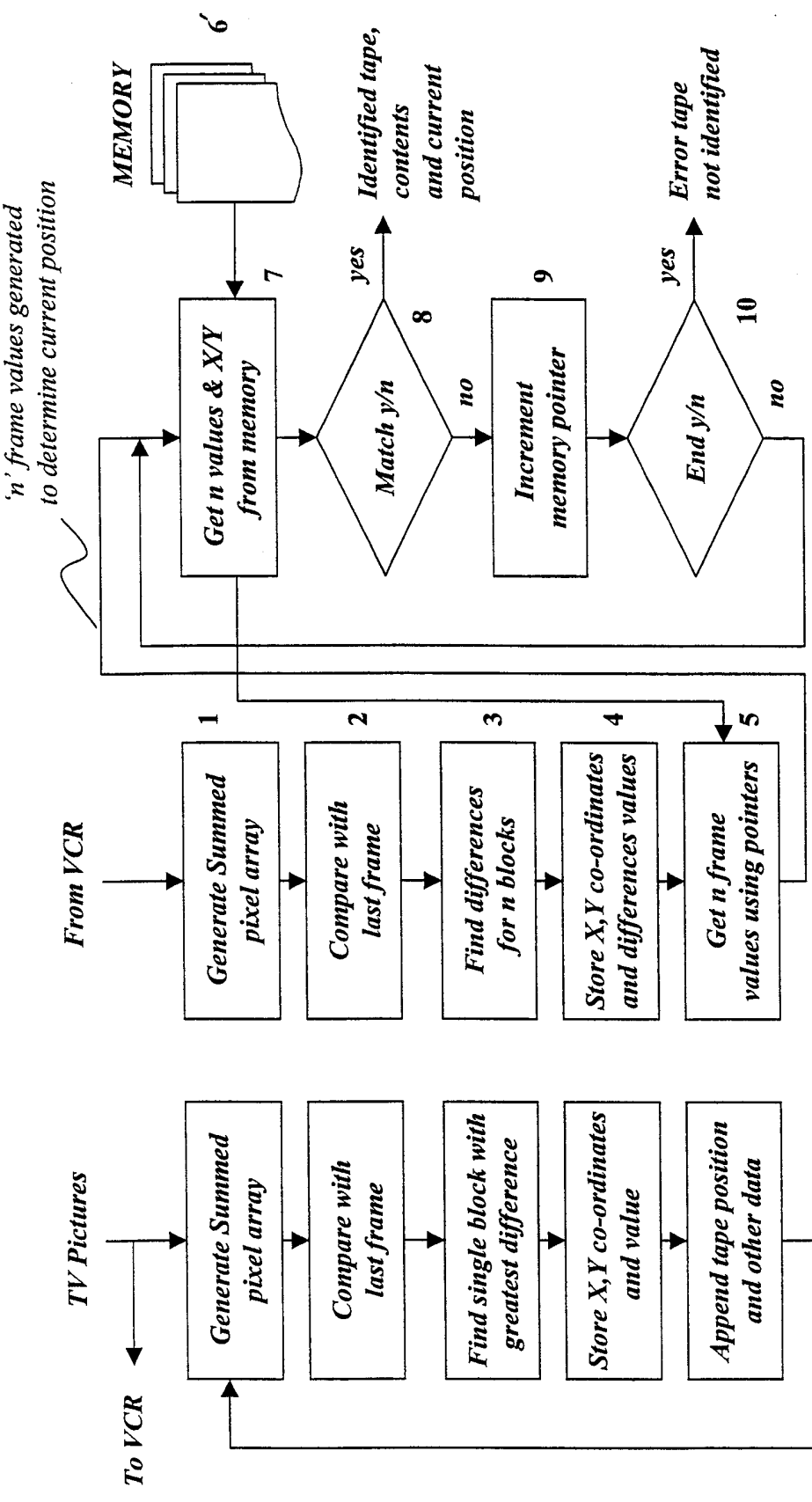
TV Pictures
To VCR
Generate Summed pixel array
Compare with last frame
Find single block with greatest difference
Store X,Y co-ordinates and value
Append tape position and other data
Write to memory during record for new recording, or during play for old recordings,
MEMORY
From VCR
Generate Summed pixel array
Compare with last frame
Find differences for n blocks
Store X,Y co-ordinates and differences values
Get n frame values using pointers
'n' frame values generated to determine current position
MEMORY
Get n values & X/Y from memory
Match y/n
yes
Identified tape, contents and current position
no
Increment memory pointer
End y/n
yes
Error tape not identified
no
1
2
3
4
5
6
7
8
9
10

Fig 10

Fig 11

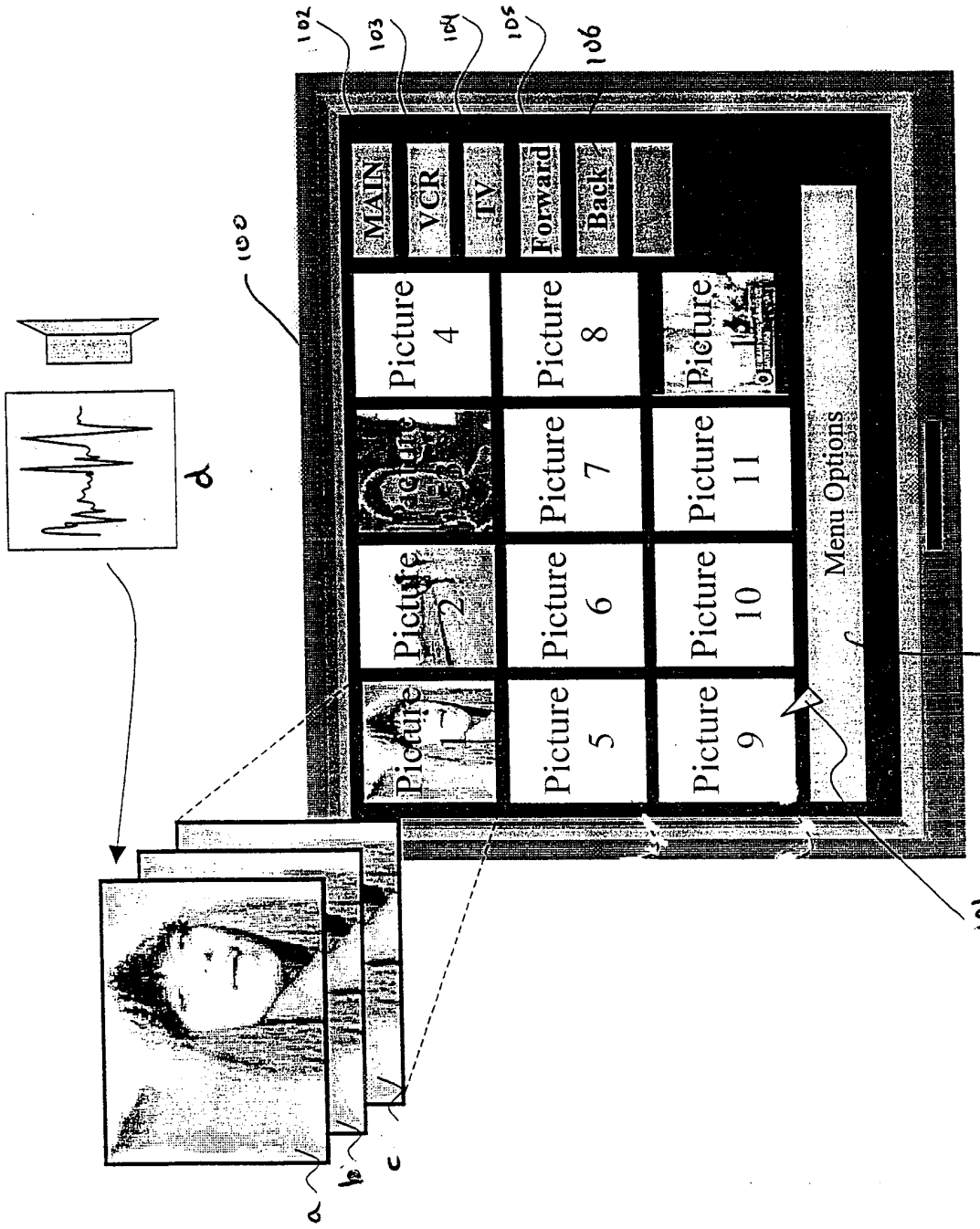
MAIN
VCR
TV
Forward
Back
Picture 1
Picture 2
Picture 3
Picture 4
Picture 5
Picture 6
Picture 7
Picture 8
Picture 9
Picture 10
Picture 11
Picture 12
Menu Options
100
101
102
103
104
105
106
a
b
c
d

Fig 12

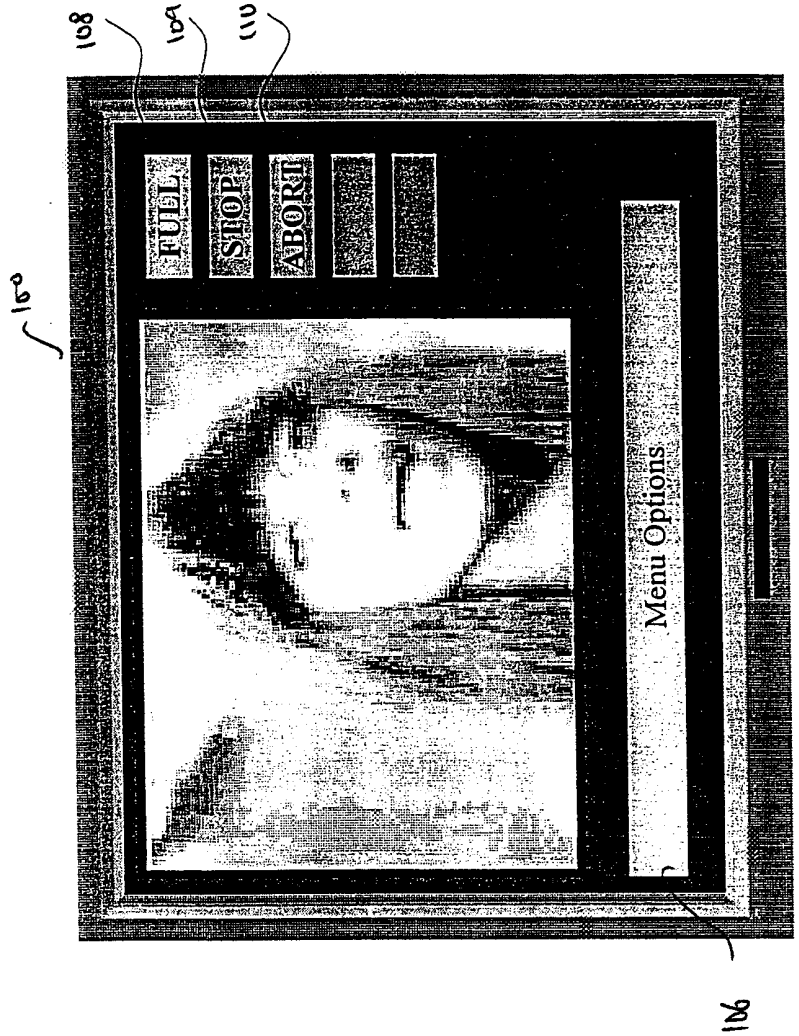

Fig 13a

Fig 13b

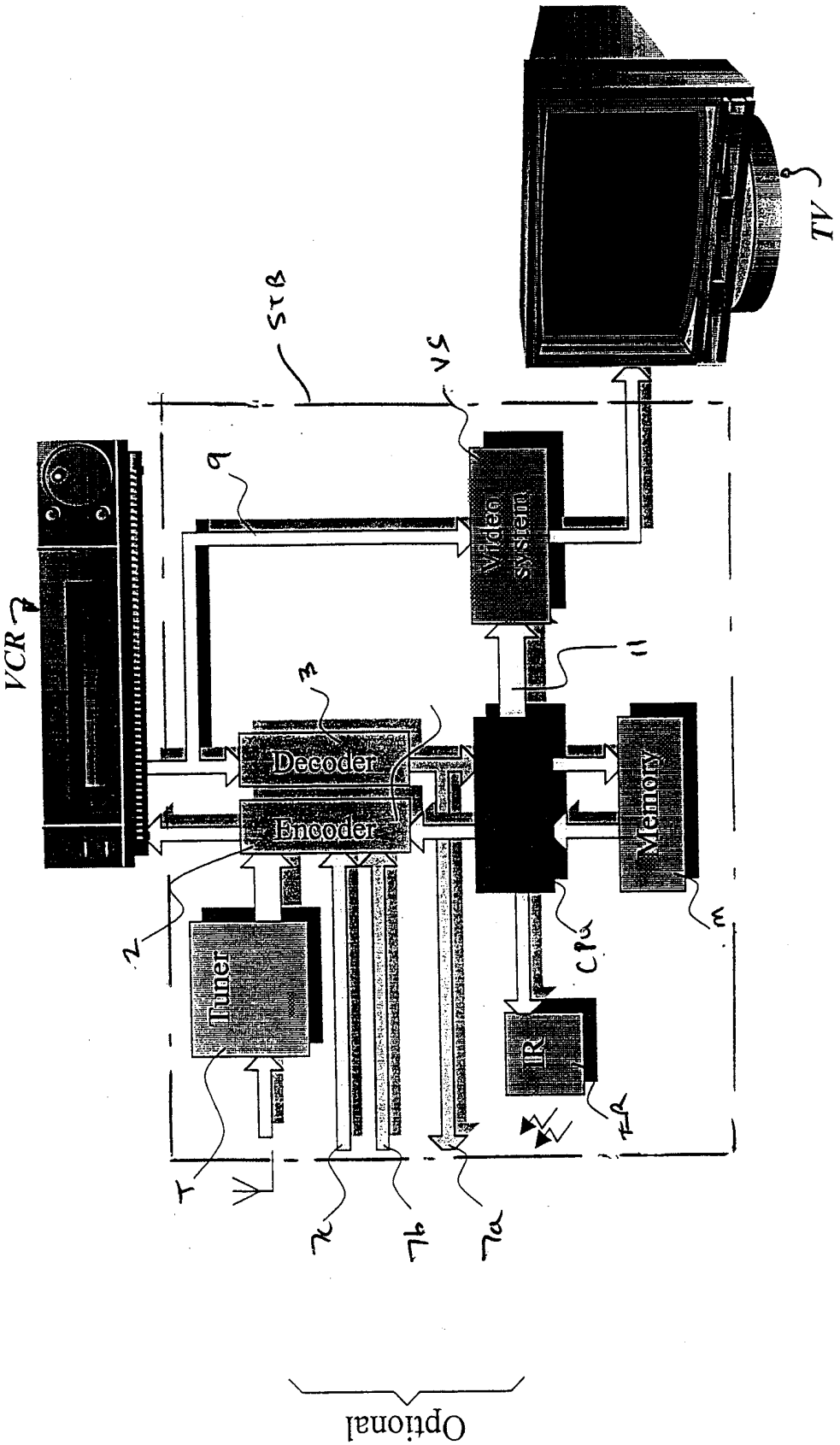
TV
STB
VS
9
Video System
VCR
11
3
Decoder
Encoder
Memory
CPU
IR
Tuner
Optional

Fig 14

INTERNATIONAL SEARCH REPORT

Inter ›nal Application No
PCT/GB 99/02338

A. CLASSIFICATION OF SUBJECT MATTER
IPC 7 G11B27/11 G11B27/28 G11B27/10 G11B27/34 G11B27/36
G06F17/30 H04N5/14 H04N5/44 H04N5/445

According to International Patent Classification (IPC) or to both national classification and IPC

B. FIELDS SEARCHED

Minimum documentation searched (classification system followed by classification symbols)
IPC 7 G11B G06F H04N

Documentation searched other than minimum documentation to the extent that such documents are included in the fields searched

Electronic data base consulted during the international search (name of data base and, where practical, search terms used)

C. DOCUMENTS CONSIDERED TO BE RELEVANT

Category °	Citation of document, with indication, where appropriate, of the relevant passages	Relevant to claim No.
X	WO 92 04801 A (INSIGHT TELECAST INC) 19 March 1992 (1992-03-19) the whole document	18-24
A		14,16, 25-29

A	EP 0 838 820 A (NIPPON ELECTRIC CO) 29 April 1998 (1998-04-29) column 5, line 7 - line 14 column 8, line 36 -column 12, line 51	1,5-14, 16,17
A		22,24, 25,29

	-/--	

[X] Further documents are listed in the continuation of box C.

[X] Patent family members are listed in annex.

° Special categories of cited documents :

"A" document defining the general state of the art which is not considered to be of particular relevance

"E" earlier document but published on or after the international filing date

"L" document which may throw doubts on priority claim(s) or which is cited to establish the publication date of another citation or other special reason (as specified)

"O" document referring to an oral disclosure, use, exhibition or other means

"P" document published prior to the international filing date but later than the priority date claimed

"T" later document published after the international filing date or priority date and not in conflict with the application but cited to understand the principle or theory underlying the invention

"X" document of particular relevance; the claimed invention cannot be considered novel or cannot be considered to involve an inventive step when the document is taken alone

"Y" document of particular relevance; the claimed invention cannot be considered to involve an inventive step when the document is combined with one or more other such documents, such combination being obvious to a person skilled in the art.

"&" document member of the same patent family

Date of the actual completion of the international search	Date of mailing of the international search report
2 December 1999	09/12/1999

Name and mailing address of the ISA	Authorized officer
European Patent Office, P.B. 5818 Patentlaan 2 NL – 2280 HV Rijswijk Tel. (+31–70) 340–2040, Tx. 31 651 epo nl, Fax: (+31–70) 340–3016	Daalmans, F

1

Form PCT/ISA/210 (second sheet) (July 1992)

INTERNATIONAL SEARCH REPORT

Inter ›nal Application No
PCT/GB 99/02338

C.(Continuation) DOCUMENTS CONSIDERED TO BE RELEVANT

Category °	Citation of document, with indication,where appropriate, of the relevant passages	Relevant to claim No.
A	HANJALIC A ET AL: "AUTOMATION OF SYSTEMS ENABLING SEARCH ON STORED VIDEO DATA" PROCEEDINGS OF SPIE,US,BELLINGHAM, SPIE, vol. 3022, 13 February 1997 (1997-02-13), page 427-438 XP000742399 ISBN: 0-8194-2433-1 the whole document	1-4,6,8, 9,11, 14-16, 22,24, 25,29
A	EP 0 472 806 A (INST PERSONALIZED INFORMATION) 4 March 1992 (1992-03-04) the whole document	1-14,29
A	WO 97 40454 A (PHILIPS ELECTRONICS NV ;PHILIPS NORDEN AB (SE)) 30 October 1997 (1997-10-30) the whole document	1-14,29
A	EP 0 713 334 A (MATSUSHITA ELECTRIC IND CO LTD) 22 May 1996 (1996-05-22) abstract column 5, line 39 -column 6, line 37 column 19, line 6 -column 22, line 31	1,5-7, 10-16, 22,24, 25,29
A	US 5 532 833 A (HONG JUNG-KOOK ET AL) 2 July 1996 (1996-07-02) the whole document	1,5-7, 10, 12-14, 16,22, 24-26,29
A	EP 0 692 790 A (HITACHI LTD) 17 January 1996 (1996-01-17) the whole document	1,5, 10-14, 16,18-29
A	EP 0 731 469 A (HITACHI LTD) 11 September 1996 (1996-09-11) the whole document	1,5-7, 9-16,29

1

INTERNATIONAL SEARCH REPORT

Information on patent family members

Inter nal Application No
PCT/GB 99/02338

Patent document cited in search report	Publication date	Patent family member(s)	Publication date
WO 9204801 A	19-03-1992	CA 2091160 A	11-03-1992
		EP 0548286 A	30-06-1993
		JP 10208328 A	07-08-1998
		JP 6504165 T	12-05-1994
		US 5353121 A	04-10-1994
		US 5727060 A	10-03-1998
		US 5479268 A	26-12-1995
		US 5532754 A	02-07-1996
		US 5790198 A	04-08-1998
		US 5619274 A	08-04-1997
		US 5949954 A	07-09-1999
		US 5479266 A	26-12-1995
		US 5809204 A	15-09-1998
		US 5808608 A	15-09-1998
EP 0838820 A	29-04-1998	JP 10136312 A	22-05-1998
EP 0472806 A	04-03-1992	JP 2863818 B	03-03-1999
		JP 4111181 A	13-04-1992
		DE 69120001 D	11-07-1996
		DE 69120001 T	24-10-1996
		US 5083860 A	28-01-1992
WO 9740454 A	30-10-1997	US 5870754 A	09-02-1999
		EP 0842478 A	20-05-1998
		JP 11509025 T	03-08-1999
EP 0713334 A	22-05-1996	CN 1151081 A	04-06-1997
		JP 8237592 A	13-09-1996
		US 5822493 A	13-10-1998
US 5532833 A	02-07-1996	NONE	
EP 0692790 A	17-01-1996	JP 8032922 A	02-02-1996
		CN 1121621 A	01-05-1996
		US 5761371 A	02-06-1998
EP 0731469 A	11-09-1996	CN 1137154 A	04-12-1996
		JP 8315546 A	29-11-1996