March 3, 1964 L. E. GILREATH 3,122,811

HYDRAULIC SLIP SETTING APPARATUS

Filed June 29, 1962 3 Sheets-Sheet 1

Fig. 1

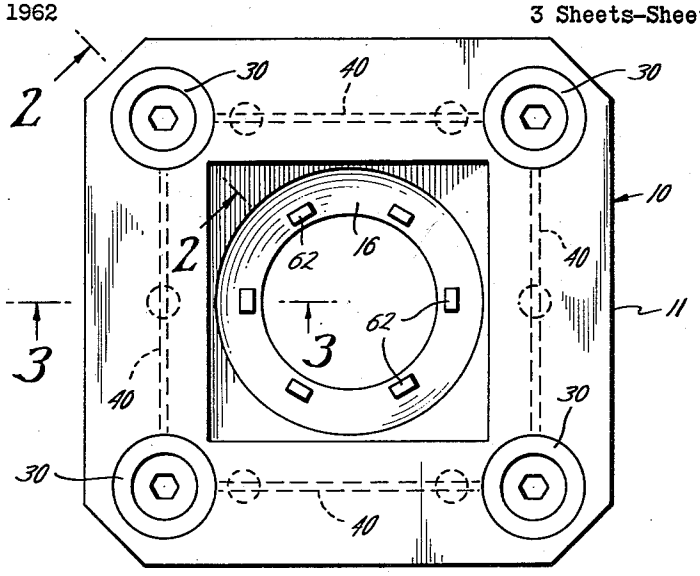

Fig. 2

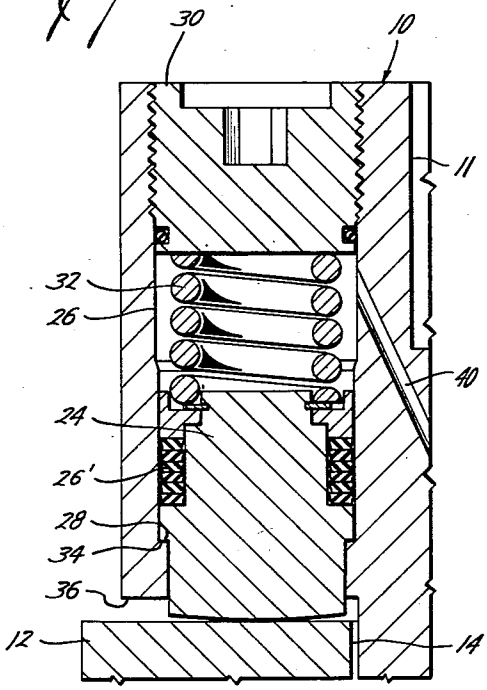

Fig. 2A

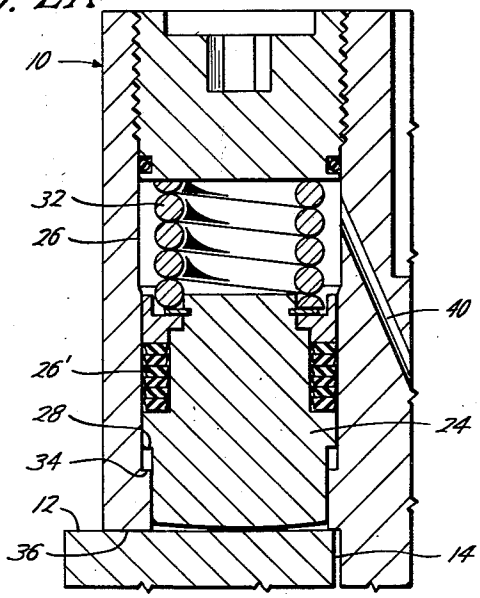

Lafayette E. Gilreath
INVENTOR.

BY James F. Weiler
Jefferson O. Gilley
William G. Stout
Paul L. DeKerter II
ATTORNEYS

HYDRAULIC SLIP SETTING APPARATUS

Filed June 29, 1962 3 Sheets-Sheet 2

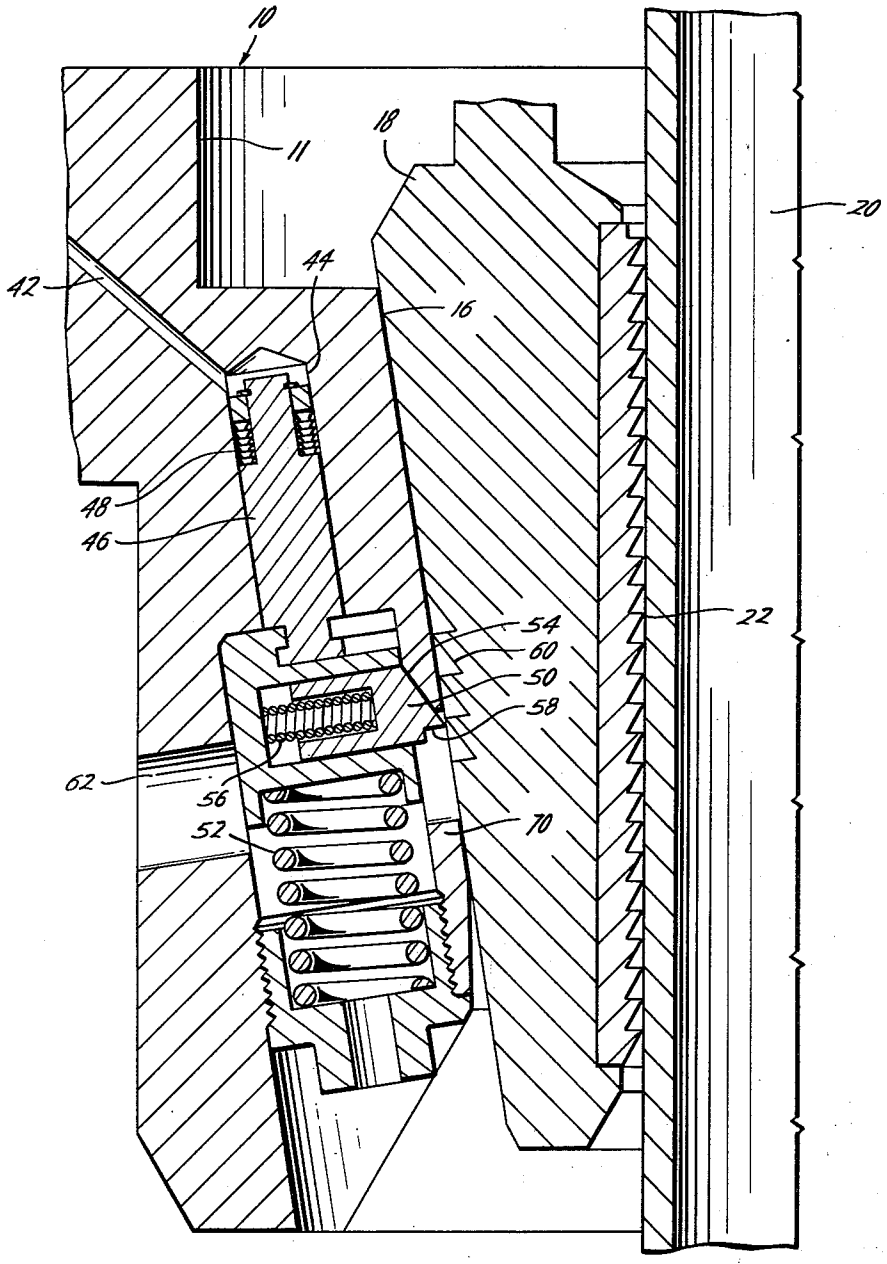

Fig. 3

Lafayette E. Gilreath
INVENTOR.

BY James F. Weiler
Jefferson D. Gilles
William A. Stout
Paul L. DeVerter II
ATTORNEYS

HYDRAULIC SLIP SETTING APPARATUS

Filed June 29, 1962 3 Sheets-Sheet 3

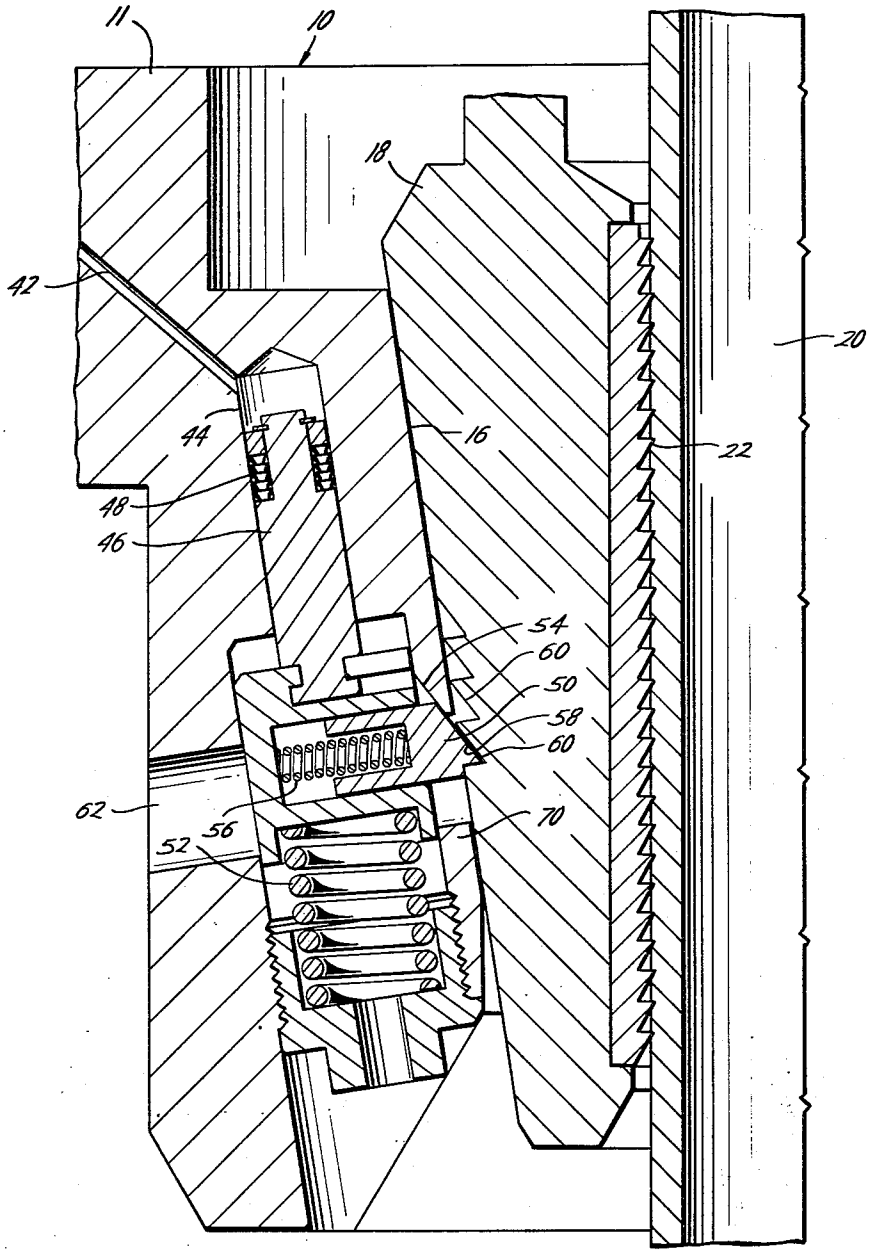

Fig. 3A

Lafayette E. Gilreath
INVENTOR.

BY James F. Theiler
Jefferson D. Gillen
William A. Stout
Paul L. DeVerter II
ATTORNEYS

United States Patent Office

3,122,811

Patented Mar. 3, 1964

1

3,122,811

HYDRAULIC SLIP SETTING APPARATUS

Lafayette E. Gilreath, 7623 Armim, Houston, Tex.

Filed June 29, 1962, Ser. No. 206,476
12 Claims. (Cl. 24—263)

The present invention relates to a hydraulic slip setting apparatus, and more particularly, relates to hydraulic slip setting apparatus for gripping drill pipe with a force that increases with an increase in a weight of the drill pipe and also acts to absorb the shock to the apparatus when the weight of the drill pipe is assumed by the slips.

Generally, slips for gripping well pipe are formed to wedge in between the pipe to be held and a tapered face on a bushing which in turn sits on a rotary table. Thus, when subjected to the weight of the pipe these slips are wedged tightly against and grip and hold the pipe. The force exerted by the slips in gripping the pipe is dependent on the pipe securely engaging and forcing the slips down the tapered face and into a tighter engagement against the pipe as the weight of the pipe increases. The present invention is directed to improvements in an apparatus for hydraulically and positively actuating the slips for securely gripping and holding the well pipe.

Therefore, it is generally an object of the present invention to provide a hydraulic slip setting apparatus for gripping well pipe in which the slip means is positively actuated to grip and hold the pipe.

A still further object of the present invention is the provision of hydraulic slip setting mechanism for gripping well pipe wherein hydraulic means are provided to positively actuate the slip means for gripping and holding the pipe with a force that increases with the increase of the weight of the drill pipe.

Yet a further object of the present invention is the provision of a hydraulic slip setting mechanism which when mounted on a support is able to absorb the shock when the weight of the drill pipe is applied to the slips and the slip setting mechanism.

Still a further object of the present invention is the provision of a hydraulic slip setting mechanism which is yieldably mounted on a support structure and includes a first set of hydraulic pistons and coacting cylinders which when actuated by an increase in the weight of the drill pipe act to create a hydraulic pressure which is applied against the slips causing them to grip the well pipe more securely.

A still further object of the present invention is the provision of a hydraulic slip setting mechanism for gripping well pipe including a support structure which includes a plurality of first pistons and coacting first cylinders which are actuated by an increase in the weight of the pipe to create a fluid pressure which is applied to a second set of smaller pistons and coacting cylinders to provide a hydraulic advantage and which engage the slips to positively force the slips down a tapered face and into a tighter engagement with the drill pipe upon an increase in the weight of the pipe.

Still a further object of the present invention is the provision of a hydraulic slip setting apparatus which includes yieldable means which normally urge a slip engaging means into engagement with the slips and further include disengaging means positioned to engage and move the slip engaging means out of contact with the slips upon release of the weight of the pipe from the slip setting mechanism.

Other and further objects, features and advantages will be apparent from the following description of a presently preferred embodiment of the invention, taken in conjunction with the drawings, in which like references indicate like parts throughout the several views, and where:

2

FIGURE 1 is an elevational view illustrating the hydraulic slip setting mechanism of the present invention,

FIGURE 2 is a cross-sectional view taken along the line 2—2 of FIGURE 1, with the support apparatus shown in position when no drill pipe weight being applied on the mechanism.

FIGURE 2A is a cross-sectional view similar to that of FIGURE 2 showing the position of the support apparatus when the weight of the drill pipe is sufficient to overcome the resilient supporting mechanism,

FIGURE 3 is a cross-sectional view taken along the line 3—3 of FIGURE 1 showing the slip actuating mechanism in position when the weight of the drill pipe is not yet applied to the slip setting apparatus, and

FIGURE 3A is a view similar to FIGURE 3 showing the position of the slip setting apparatus when the weight of the drill pipe is applied to the slip actuating mechanism and the hydraulic slip setting mechanism of the present invention.

Referring now to the drawings, and in particular to FIGURE 1, the hydraulic slip setting apparatus of the present invention is generally designated by the reference numeral 10 and includes a support body or housing 11. The body 11 can be adapted to be supported on a suitable support, and it is particularly noted that it may have the contour and size of a conventional master bushing and can be utilized, as will be further described hereinafter, in place of the master bushing on a conventional rotary drilling table. Thus, similar to the master bushing the apparatus 10 can be utilized to be supported on a support 12 such as a rotary table (FIGURE 2 and 2A) and can be positioned in the opening 14 of the rotary table 12.

As best seen in FIGURES 2, 3 and 3A, the body 11 includes the usual tapered face 16 whereby a conventional slip means such as a plurality of slip segments 18 may be wedged against and grip and hold drill pipe 20 by any suitable gripping means such as a plurality of teeth 22. Thus, when the drill pipe 20 is inserted through the apparatus 10 and the slip segments 18 are inserted between the pipe 20 and the tapered face 16, the teeth 22 will engage the pipe 20, and the weight of the pipe 20 is then applied to the body 11 of the slip setting mechanism 10.

Referring now to FIGURES 2 and 2A, the supporting structure for supporting the body 11 on a support such as a rotary table 12 is best seen. A plurality of first piston and cylinder assemblies such as piston 24 and cylinder 26, one of the pistons or cylinders which is adapted to be supported on the rotary table segment 12, here shown as the piston 24, are provided. The pistons 24 include the usual sealing rings 26′ and include a shoulder 28 for coacting with the cylinder 26, as will be more fully described hereinafter. Cylinder 26 is closed at its upper end preferably by threaded plug 30. A spring 32 is provided between the piston 24 and the plug 30 thus tending to urge the plug 30, the cylinder 26, and the body 11 upwardly. Thus, the body 11 is normally supported on a plurality of springs 32, the piston 24 and a rotary table 12. The cylinder 26 is prevented from being pressed off of the piston 24 by the spring 32 by the interaction of a cylinder shoulder 34 coacting with the piston shoulder 28. However, it is to be noted in FIGURE 2 that in the no load position the bottom end 36 of the cylinder does not rest on the support 12. However, as thus seen from FIGURE 2A when a sufficient load of pipe is carried by the apparatus 10 to overcome the springs 32, the cylinder ends 36 will ride upon and be supported by the support 12.

As thus seen in FIGURE 1, a plurality of these supporting pistons and cylinder assemblies, here shown as four, are utilized to support the body 11 on a suitable support such as the rotary table 12. A suitable fluid

manifold 40 is shown dotted in FIGURE 1 and connects the supporting cylinders 26.

As thus seen in FIGURES 3 and 3A, a fluid passageway 42, which is connected to the fluid manifold 40, leads to a second set of piston and coacting cylinder assemblies, here shown as six. Thus cylinders 44 are provided in the body 11 and in each of which a piston 46 having conventional sealing rings 48 is provided. Preferably, the cylinders 44 and pistons 46 are positioned parallel to the tapered face 16. A suitable slip engaging means here shown as an actuating tooth is provided to engage the slip 18 and wedge the slip tighter against the pipe 20 on downward movement of the piston 46.

A slip engaging tooth 50, which is connected to each of the pistons 46, is normally held out of contact with the slip segment 18 by virtue of a spring 52 which yieldably urges the tooth 50 and the piston 56 into an upward position. In this upward position a tooth disengaging shoulder 54 is provided which holds the tooth 50 out of engagement with the slip segment 18 in spite of the action of tooth spring 56, which normally acts to push the tooth 50 into engagement with the slip 18. Preferably, positive coacting elements are provided between the tooth 50 and the back side of the slip 18 to positively engage the tooth 50 with the slips 18. Thus, the tooth 50 includes a point 58 which is provided to engage one of a plurality of slots 60 on the back side of the slip 18. Thus, when pressure is applied to the top of the piston 46, it is moved downwardly in the cylinder 44 pushing the slip engaging tooth 50 downwardly out of engagement with the disengaging shoulder 54 and into slot 62. At the same time spring 56 pushes the tooth 50 towards the back of the slip 18 so that the point 58 of the tooth engages one of notches 60 in the back of the slip 18. As best seen in FIGURE 3A, further movement of the piston 46 and tooth 50 positively carries the slip segment 18 down the inclined surface 16 and thus into a tighter engagement with the pipe 20 to more securely grip the pipe.

As thus seen in FIGURES 1, 2 and 2A the hydraulic pressure for actuating the piston 46 of FIGURES 3 and 3A is provided by an increase in the weight of the pipe 20 being applied to the support body 11. This in turn causes the supporting cylinders 26 to move downward over the pistons 24 thereby compressing the fluid in the cylinders 26 forcing the compressed fluid through the fluid manifolds 40, the passageways 42, into the cylinders 44 and against the pistons 46. Preferably, the pistons 46 and cylinders 44 are smaller than the pistons 24 and the cylinders 26 in order to provide a shock absorbing action and increase the stroke of the pistons 46. It is also to be noted that the action between the pistons 24, cylinders 26 and the resilient supporting springs 32 provides a shock absorbing action in the apparatus 10 when the weight of the pipe is applied to the apparatus.

Of course, it is desirable that the slips 18 be limited as to their inward movement in order to prevent damage to the well pipe 20. Thus, when the supporting cylinders 26 move a predetermined distance the ends 36 of the cylinders 26 contact the rotary table 12 thereby preventing a further increase in hydraulic pressure created in the cylinders 26 which can be transmitted to the actuating pistons 46. And referring to FIGURE 3A it is noted that the teeth 50 will contact a stop shoulder 70 to prevent further downward movement of the tooth and slip 18.

By way of example only, a suitable apparatus has been constructed with the cylinders 26 having a three inch diameter and a ⅜ inch stroke, the spring 32 being a 2¾ inch O.D. spring having a compression strength of 500 pounds at its open length of 2⅝ inches and a compression strength of 750 pounds at 2¼ inch length. The cylinder 44 is a 1½ inch cylinder with a 1½ inch stroke and spring 52 was a 1⅜ O.D. spring in its open position having a length of 4½ inches and a compression strength of 150 pounds. Spring 52 when compressed to 3 inches had a compression strength of 300 pounds.

In use, the hydraulic slip setting apparatus 10 of the present invention is suitably mounted on a support such as a conventional rotary table 12 for gripping and holding a well pipe. In fact, the body 11 may be sized and shaped to permit the present invention to be substituted for the conventional master bushing and thereby conveniently fit into the cavity 14 of the rotary table 12 and to be supported thereon. The well pipe 20, as is conventional, is lowered through the annual tapered face 16 (FIGURES 1, 3 and 3A). Conventional slips or slip segments 18 are then inserted between the tapered face 16 and the well pipe 20 with the gripping means or teeth 22 of the slip segments 18 engaging the pipe 20 to grip and hold the pipe in place.

The weight of the pipe 20 is thus applied through the slips 18 to the supporting body 11. At no load or light loads the supporting structure is in a position as shown in FIGURE 2. That is, pistons 24 rest on the supporting rotary table 12 and supporting springs 32 support the upper end of the cylinders 26 in an upward position whereby the supporting body 11 is supported by the plurality of supporting springs 32. At this position the fluid volume in cylinders 26 is at its maximum and it is noted that the lower end 36 of the cylinders 26 does not rest upon the support 12. Consequently no hydraulic pressure is created in the cylinders 26. In addition, and referring to FIGURE 3, it is noted that at the no load or light load position the slip engaging means or teeth 50 are out of engagement with the slip segments 18. Since in this position there is no fluid pressure above the piston 46 to overcome the action of spring 52, the piston 46 and engaging teeth 50 are held upwardly and out of position with the teeth 50 being retracted inwardly by contact with the disengaging shoulders 54.

As the amount of and consequently the weight of the pipe applied and carried by the apparatus 10 is increased, the weight transmitted to the body 11 is increased thereby overcoming the supporting springs 32. The cylinders 26 are moved downwardly over the pistons 24. Consequently the hydraulic fluid in the cylinders 26 is compressed and flows through the fluid manifold 40 and into the cylinders 44 (FIGURE 3A). Preferably, the supporting cylinders 26 are in fluid communication with each other thereby maintaining a uniform pressure in all of the chambers 26 so as to keep the supporting body 11 in balance. Similarly, since all of the actuating cylinders 44 are in communication with the manifold fluid from cylinders 26 the pressure applied to each slip segment 18 will be uniform. Thus, as the fluid pressure in the chambers 44 increases, the pistons 46 are forced downwardly overcoming the springs 52. The engaging teeth 50 move out of engagement with the disengaging shoulder 54 and into slots 62 whereby springs 56 urge the points 58 of the teeth 50 into engagement with one of the notches 60 on the back of the slip segments 18. Further downward movement of the pistons 46 and teeth 50 carries the slip segment 18 down the tapered face 16 and into a tighter engagement with the pipe 20 to securely grip and hold the increase in weight of the pipe.

It is to be noted that in applying the heavy load of the pipe to the supporting body 11 and to the rotary table 12 the shock of applying this load will be absorbed by the supporting springs 32 and the hydraulic cylinders 26 and pistons 24.

It is also to be noted that the maximum amount of force that can be applied to the slips 18 in wedging them against the pipe 20 is limited to prevent damage to the pipe. Thus, referring to FIGURE 2A, when a predetermined amount of weight has been applied to the supporting structure 11 the shoulders 36 of the supporting cylinders 26 contact and rest on the support 12 thereby preventing the further generation of hydraulic pressure between the pistons 24 and the cylinders 26. Referring to FIGURE 3A it is noted that the limit of downward

movement of the engaging teeth **50** is limited when they come into contact with the stop shoulder **70**.

Where it is desired to remove the pipe **20** from the well, the pipe is lifted by conventional means (not shown) and the weight of the pipe is removed from the supporting body **11**. This relieves the pressure applied by pistons **24** and cylinders **26** as the supporting springs **32** move the body support **11** upwardly. With the pressure then removed from the cylinders **44**, the pistons **46** return to an upward position by the action of the springs **52**. Thus the slip engaging means **50** will be moved upwardly and out of engagement with the back of the slip segments **18** and the disengaging shoulders **54** will contact the teeth **50** thereby retracting them within the body **11**. The pipe **20** and the slip segments **18** may then be conventionally removed.

The slip setting mechanism of the present invention is therefor well suited and adapted to obtain the objects, ends, advantages and features mentioned as well as others apparent therein. While a presently preferred embodiment of the invention has been described for the purpose of disclosure, other and further uses thereof will occur to those in the art in which the invention may be used and changes and arrangements of parts may be made which are within the spirit of invention and within the scope of appended claims. What is claimed is:

1. A hydraulic slip setting apparatus for gripping well pipe with a pipe slip by a force that increases with an increase in the weight of the drill pipe comprising,
   a housing,
   said housing having a tapered face for engaging and supporting said pipe slip,
   yieldable means engaging and yieldably supporting said housing,
   a first piston and coacting cylinder engaging and supporting the housing whereby said piston moves into said cylinder on downward movement of said housing,
   slip engaging means slidably carried by the housing adjacent said tapered face and adapted to engage said slip,
   a second piston and coacting cylinder connected to said slip engaging means,
   a fluid passageway communicating between said first and second cylinders whereby on an increase in the weight of pipe carried by said slip and housing the fluid pressure in said first cylinder is increased and said pressure increase is transmitted to said second cylinder for moving said slip engaging means and said slip into a tighter engagement with the pipe.

2. The invention of claim 1 including spring means engaging and yieldably urging said slip engaging means into engagement with said slip.

3. The invention of claim 1 including yieldable means engaging and normally urging the slip engaging means upwardly.

4. The invention of claim 1 including disengaging means positioned to engage and move said slip engaging means out of engagement with said slip.

5. The invention of claim 1 wherein the second piston and cylinder are of a smaller diameter than said first piston and cylinder.

6. A hydraulic slip setting apparatus for gripping well pipe with slip means by a force that increases with an increase in the weight of the well pipe comprising,
   a housing,
   said housing having a tapered face for engaging and supporting pipe slip means between said face and said pipe,

   spring means engaging and yieldably supporting said housing,
   a plurality of first pistons and coacting first cylinders connected to and supporting the housing,
   a plurality of second pistons and coacting second cylinders carried by said housing,
   a fluid passageway communicating between the first set of cylinders and the second set of cylinders, and
   slip engaging means connected to each of said second pistons for engaging and moving said slip means down the tapered face and into a tighter engagement with the pipe on movement of said second pistons in response to an increase in pressure in said first cylinders and consequently an increase in pressure in said second cylinders when the weight of the pipe is increased.

7. The invention of claim 6 wherein said second pistons and second cylinders are of a smaller diameter than said first pistons and first cylinders.

8. The invention of claim 6 including yieldable means engaging and normally urging said slip engaging means upwardly.

9. The invention of claim 6 including disengaging means positioned to engage and move said slip engaging means out of engagement with said slip means when said slip engaging means is moved upwardly.

10. The invention of claim 6 including,
   yieldable means engaging and urging said slip engaging means upwardly, and
   yieldable means engaging and urging said slip engaging means into engagement with said slip.

11. A hydraulic slip setting apparatus for gripping well pipe with pipe slips with a force that increases with an increase in the weight of the drill pipe comprising,
   a housing,
   said housing having a tapered face for engaging and supporting said pipe slips between said face and said well pipe,
   a plurality of first pistons and coacting first cylinders connected to and supporting said housing,
   said first pistons adapted to be positioned on a support,
   spring means in said cylinders between said pistons and the support normally holding the housing out of contact with the support,
   a plurality of second pistons and coacting second cylinders carried by said housing,
   a fluid manifold communicating said second cylinders with said first cylinders, and
   slip engaging means connected to each of said pistons for engaging and moving said pipe slips down the tapered face and into a tighter engagement with the pipe on movement of said second pistons downward in response to an increase in pressure in said first cylinder and consequently an increase in pressure in said second cylinders when the weight of the pipe is increased.

12. The invention of claim 11 wherein said second pistons and second cylinders are positioned substantially parallel to said tapered face.

References Cited in the file of this patent

UNITED STATES PATENTS

1,750,822	Spalding	Mar. 18, 1930
2,170,057	Kerr	Aug. 22, 1939
2,589,159	Stone	Mar. 11, 1952
2,897,895	Ortloff	Aug. 4, 1959
2,976,930	Marquis et al.	Mar. 28, 1961