(12) INTERNATIONAL APPLICATION PUBLISHED UNDER THE PATENT COOPERATION TREATY (PCT)

(19) World Intellectual Property Organization
International Bureau

(43) International Publication Date
21 March 2024 (21.03.2024)

WIPO | PCT

(10) International Publication Number
WO 2024/057141 A1

(51) International Patent Classification:
*A41D 13/018* (2006.01)

(21) International Application Number:
PCT/IB2023/058797

(22) International Filing Date:
06 September 2023 (06.09.2023)

(25) Filing Language: English

(26) Publication Language: English

(30) Priority Data:
102022000018723 13 September 2022 (13.09.2022) IT

(71) Applicant: **ALPINESTARS RESEARCH S.P.A.** [IT/IT]; Via Alcide De Gasperi, 54, 31010 Maser (TV) Frazione: Coste (IT).

(72) Inventors: **MAZZAROLO, Giovanni**; Via San Vettore, 14, 31010 Coste di Maser (TV) (IT). **FAGGIAN, Riccardo**; Via Stradona 122/2, 30031 Dolo (VE) (IT).

(74) Agent: **MARRI, Luca** et al.; c/o DRAGOTTI & ASSOCIATI Srl, Via Paris Bordone, 9, I-31100 Treviso (TV) (IT).

(81) Designated States *(unless otherwise indicated, for every kind of national protection available)*: AE, AG, AL, AM, AO, AT, AU, AZ, BA, BB, BG, BH, BN, BR, BW, BY, BZ, CA, CH, CL, CN, CO, CR, CU, CV, CZ, DE, DJ, DK, DM, DO, DZ, EC, EE, EG, ES, FI, GB, GD, GE, GH, GM, GT, HN, HR, HU, ID, IL, IN, IQ, IR, IS, IT, JM, JO, JP, KE, KG, KH, KN, KP, KR, KW, KZ, LA, LC, LK, LR, LS, LU, LY, MA, MD, MG, MK, MN, MU, MW, MX, MY, MZ, NA, NG, NI, NO, NZ, OM, PA, PE, PG, PH, PL, PT, QA, RO, RS, RU, RW, SA, SC, SD, SE, SG, SK, SL, ST, SV, SY, TH, TJ, TM, TN, TR, TT, TZ, UA, UG, US, UZ, VC, VN, WS, ZA, ZM, ZW.

(84) Designated States *(unless otherwise indicated, for every kind of regional protection available)*: ARIPO (BW, CV, GH, GM, KE, LR, LS, MW, MZ, NA, RW, SC, SD, SL, ST, SZ, TZ, UG, ZM, ZW), Eurasian (AM, AZ, BY, KG, KZ, RU, TJ, TM), European (AL, AT, BE, BG, CH, CY, CZ, DE, DK, EE, ES, FI, FR, GB, GR, HR, HU, IE, IS, IT, LT, LU, LV, MC, ME, MK, MT, NL, NO, PL, PT, RO, RS, SE, SI, SK, SM, TR), OAPI (BF, BJ, CF, CG, CI, CM, GA, GN, GQ, GW, KM, ML, MR, NE, SN, TD, TG).

**Declarations under Rule 4.17:**
— *of inventorship (Rule 4.17(iv))*

(54) Title: WEARABLE PROTECTION DEVICE COMPRISING AN INFLATABLE MEMBER AND METHOD FOR SAFELY ACTIVATING THE INFLATABLE MEMBER OF SAID WEARABLE PROTECTION DEVICE

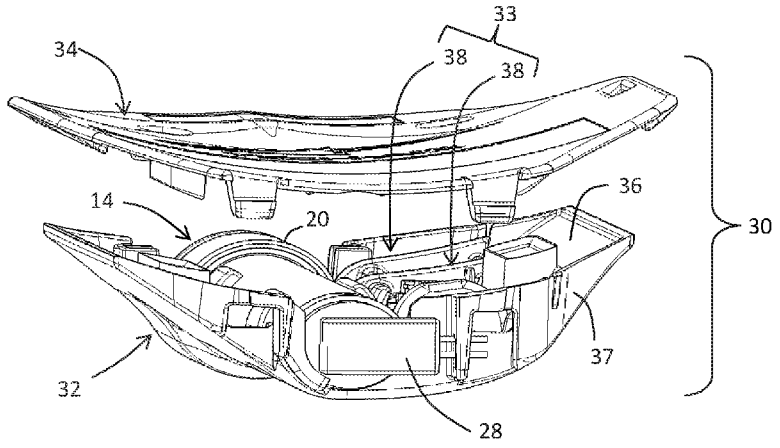


Fig. 6

(57) Abstract: The present invention relates to a wearable protection device (10) comprising: - at least one inflatable member (12) designed to move between a rest condition and an operating condition; - at least one inflator device (14) designed to be coupled to the at least one inflatable member (12) for inflating the at least one inflatable member (12); - a housing (30) designed for accommodating the at least one inflator device (14). According to the invention, said housing (30) comprises detection means (33) suitable for moving between a first configuration and a second configuration, the insertion of the at least one inflator device (14) inside a holding seat (40) of the housing (30) causing the moving of the detection means (33) from the first configuration to the second configuration. The present invention also relates to a method for safely activating the inflatable member (12) of said wearable protection device (10).

WO 2024/057141 A1

[Continued on next page]

**Published:**
— *with international search report (Art. 21(3))*

# Wearable protection device comprising an inflatable member and method for safely activating the inflatable member of said wearable protection device

The present invention relates to a wearable protection device comprising an inflatable member. Moreover, the present invention relates to a method for safely activating the inflatable member of said wearable protection device.

In particular, the present invention relates to a wearable protection device provided with an inflatable member, suitable for being used in all the fields where an effective protection against impacts and/or falls must be obtained. For example, the wearable protection device is suitable for being worn by motorcyclists, cyclists, skiers or during working activities.

For sake of clarity, in the present description reference will be made, in a not limiting way, to a wearable protection device suitable for being worn by a motorcyclist.

Typically, this wearable protection device consists in a protection garment, like for example a jacket, a suit, a vest, a belt, which contains an inflatable member, suitable for moving from a rest condition, wherein it is in a deflated status, to an operating condition, wherein it is in an inflated status.

The inflatable member is in fluid communication with an inflation device, like for example a gas cartridge, which is adapted to introduce into the inflatable member a predefined quantity of an inflation fluid, like for example compressed gas, so as to inflate, and therefore expand, the inflatable member.

The releasing of the inflation fluid can be controlled by a mechanical or electronic system.

The gas cartridges usually consist in a cylindrical housing having a first end connected to an opening of the inflatable member and, in case of a system electronically activated, a second end connected to the control unit of the wearable device by means of a specific connector.

The connection of the gas cartridge to the inflatable member can be carried out by directly clamping an end of the cartridge inside the opening of the inflatable member. Alternatively, the end of the gas cartridge can be provided with an external thread suitable for being screwed inside a corresponding thread of a cap arranged at the opening of the inflatable member.

Alternatively, the end of the gas cartridge can be connected to the inflatable member by means of a bayonet mount, wherein the male element is provided at the end of the gas cartridge and a female receptor is provided at a cap arranged at the opening of the inflatable member.

In the known devices, after having been inflated, the inflatable member can be reused, if it has not undergone damages, like tearing or punctures.

On the contrary, unless the gas cartridge is provided with more than one inflation charge, it needs to be replaced after every deployment with a new one.

However, the replacement of the gas cartridge is an operation which could be dangerous if not managed in the proper way.

As a matter of fact, in order to grant high performances in terms of pressure and deployment time, without increasing the dimensions of the gas cartridge, the latter usually contains a pyrotechnic charge.

In case of an airbag system electronically activated, the pyrotechnic charge is fired by means of an electronic impulse coming from the control unit; in case of airbag mechanically activated the pyrotechnic charge boosts a mechanical firing pin.

Even if the manufacturers follow standard safety procedures to guarantee the safe manipulation of the gas cartridges, the possibility that the electronic or mechanical control of the cartridges may fail or that the user didn't handle the cartridge in an appropriate way during the manipulation and/or the change of the gas cartridge exists.

In order to avoid any safety problems to the final user, at present the replacement of the gas cartridges is handled by authorized centers having a specific training for handling pyrotechnical parts and for guaranteeing the correct connection between the gas cartridge and the inflatable member.

To replace the exhaust gas cartridge, in case of a system electronically activated, the electronic connector to the control unit needs to be firstly released from the gas cartridge and then the end of the gas cartridge connected to the inflatable member needs to be removed from the inflatable member.

However, both operations may cause an accidental triggering of the pyrotechnical charge of the gas cartridge with high risks for the operator.

At the same time, even if the gas cartridge is replaced in a safe manner, the protection of the user could be compromised.

As a matter of fact, a proper inflation of the inflatable member is prevented if the new gas cartridge is not correctly fixed to the inflatable member, with high risks for the final user.

In particular, the triggering of a gas cartridge not coupled, or not properly coupled, to the inflatable member not only can make ineffective the use of the inflatable protective device, but it can also be dangerous for the user, since the gas cartridge, or the connecting cap, can be propelled towards the body of the user.

Another danger for the user is that, in case the gas cartridge is not coupled or not properly coupled, directly or by means of a connecting cap to the inflatable member, the outward flow of the inflation gas can determine damages to the user, such as injuries or burns.

In view of the above problems, if the inflatable member is activated during the use of the wearable protective device, the latter must be returned to an authorized center for carrying out the replacement of the gas cartridge.

However, the shipment of the wearable protective device is costly since the garment is bulky.

Moreover, the user for at least a certain period of time, usually two or three weeks, is deprived of the additional protection offered by the inflatable wearable protection device, unless he/she has at his/her disposal a further inflatable protection garment, with the related not negligibly costs.

A solution to the above mentioned technical problem has been disclosed in WO2021/089439 in the name of the same applicant.

In particular, in WO2021/089439 a wearable protection device provided with a safety device is disclosed. Such a safety device is designed to signal an unsafe state of the wearable protection device if the inflator device is decoupled or not properly coupled to the inflatable member.

In an embodiment disclosed in WO2021/089439 the inflator device is designed to be inserted in a holding seat which can comprise a cover suitable for protecting the inflator device.

The cover can be provided with first fastening means designed to be coupled with corresponding second fastening means of the holding seat so as to permit the fastening of the cover to the holding seat.

First and second fastening means are designed to be matched to each other only if the safety device permits the insertion of the inflator device inside the holding seat.

As a matter of fact, if the inflator device, in the form of a gas cartridge, cannot be inserted inside the holding seat, the cover cannot be correctly fixed to the holding seat, since the inflator device will project from the holding seat.

The above solution is greatly appreciated since it provides clear and reliable feedback to the user about the connection between the inflator device and the inflatable member, so that also a final user not having a specific training is able to understand whether the inflator device has been properly connected to the inflatable member.

However, the above mentioned solution does not prevent the fastening of the cover to the holding seat if the inflator device, or the assembly formed by the inflator device and the cap fastened to the inflatable member, is completely missed, namely if the cover for whatever unpredictable reason has been fastened to the holding seat without before inserting the inflator device inside its seat.

In this case, a visual inspection of the wearable protection device can lead to the erroneous conclusion that the inflatable member is able to be inflated in case of danger, while the latter actually lacks one of the indispensable components for its proper inflation.

The main object of the present invention is therefore to provide a wearable protection device with an inflatable member configured to overcome, or at least reduce, the drawbacks mentioned above with reference to the known wearable airbag devices.

More specifically, the main object of the present invention is to provide a wearable protection device with an inflatable member configured to permit a safe and proper replacement of the

gas cartridge, providing at the same time a reliable feedback about the correct installation of the inflator device inside its seat.

Another object of the present invention is to provide a wearable protection device with an inflatable member configured not to permit the activation of the inflatable member, in case the inflator device is absent or not properly connected to the inflatable member.

Lastly, an object of the present invention is to provide a method for safely activating the inflatable member of a wearable protection device.

These objects, and other objects that will better appear in the following of the present description, are achieved by a wearable protection device according to claim 1 and by a method according to claim 24.

The advantages and the characteristic features of the invention will appear more clearly from the following description of preferred, but not exclusive, embodiments of the invention which refers to the accompanying figures in which:

- figure 1 shows, in schematic form, a rear view of a wearable protection device worn by a user according to the present invention;
- figure 2 shows, in schematic form, a rear perspective view of a further embodiment of the wearable protection device according to the present invention;
- figure 3 shows, in schematic form, a possible connection between the inflator device and the inflatable member of the wearable protection device according to the invention;
- figure 4 shows an exploded view of the inflator device and the base of a housing of the inflator device according to the invention;
- figure 5 shows, in schematic form, a perspective view of a housing for the inflator device of the wearable protection device according to the invention;
- figure 6 shows an exploded view, taken from a different perspective, of the housing of figure 5, wherein the inflator device is inserted inside its holding seat;
- figure 7 shows a perspective view of the base of the housing of figure 6, wherein the inflator device has been removed;
- figure 8 is a view similar to figure 7 showing how the spacing means according to the invention can move from a first configuration to a second configuration;
- figure 9 is a view similar to figure 6, wherein the inflator device is not inserted inside its holding seat;
- figure 10 is a view similar to figure 7 wherein the inflator device, without the connecting cap to the inflatable member, is housed inside the base of the housing;
- figure 11 is a view similar to figure 10 wherein, in addition to the inflator device, also the connecting cap between inflatable member and inflator device is housed inside the base of the housing;
- figure 12 shows an enlarged exploded view of a detail of the base of the housing of figure 7;

- figure 13 shows an exploded view of a further embodiment of the housing of figure 5;
- figure 14 shows a view similar to figure 13, but related to a different embodiment;
- figure 15 is a view similar to figure 11, but related to a different embodiment;
- figure 16 shows an enlarged view of a detail of the base of the housing of figure 14;
- figure 17 shows an enlarged view of a detail of figure 15;
- figure 18 is a view similar to figure 9, but related to a different embodiment;
- figure 19 is a view similar to figure 6, but related to the embodiment of figure 18;
- figure 20 shows an enlarged view of a detail of the base of the housing of the inflator device according to a different embodiment;
- figure 21 is a view similar to figure 20, but related to a different embodiment;
- figure 22 is a view similar to figure 20, wherein the inflator device with a connecting cap is inserted inside its holding seat;
- figures 23 and 24 are views similar to figure 22, but related to different embodiments.

With reference to figures 1 and 2, an example of a wearable protection device, according to the present invention, is indicated in its whole by the reference 10.

The wearable protection device 10 can be a garment, like for example a jacket or a suit, or alternatively can be an undergarment suitable for being used in combination with an outer protection garment.

In a further embodiment, the wearable protection device 10 can be a harness designed to be worn on top or under a further garment.

Advantageously, the wearable protection device can be a device for protecting the body of the user from injuries that result from impacts and falls, especially in elderly persons. In this case, the wearable protection device can be a pair of shorts, or briefs, designed to protect the hips of the user.

Alternatively, the wearable protection device can be a protection element, like for example a helmet.

The wearable protection device 10 is preferably designed for being worn by motorcyclists. Nevertheless, as it will appear more clearly from the following description, the wearable protection device 10 can also be advantageously used by cyclists, skiers, workers or in other fields where an effective protection of the user's body must be obtained.

The wearable protection device 10 comprises at least one inflatable member 12. The inflatable member 12 is designed to move from a rest condition, wherein it is in a deflated status, and an operating condition, wherein it is in an inflated status. The inflatable member 12 can be inflated with a fluid, like for example air or gas, so as to expand for protecting the user of the wearable protection device 10 against impacts, falls or slides.

In the embodiments shown in figures 1 and 2, the wearable protection device 10 is provided with a single inflatable member 12.

Advantageously, such an inflatable member 12 is designed to be arranged over the chest and/or the back and/or the shoulders and/or the sides of the user. Obviously, different arrangements of the inflatable member 12 are possible in order to meet other specific needs.

The wearable protection device 10 can be provided with a single inflatable member 12 or a plurality of inflatable members suitable for covering different portions of the user's body.

Preferably, the inflatable member 12 has a bag-like shape.

As schematically shown in figures 3 and 4, the wearable protection device 10 also comprises at least one inflator device 14 designed to be coupled to the inflatable member 12 for inflating the latter when the inflator device 14 is triggered.

Preferably the inflator device 14 is chosen from the group comprising pyrotechnic inflators, compressed gas inflators and hybrid inflators.

The inflator device 14 can comprise a plurality of inflation charges. In this case the inflatable member 12 can be inflated more than once, so as to permit inflations in different time periods.

In this circumstance, the replacement of the inflator device 14 needs to be carried out once all the inflation charges have been triggered.

As it is shown in the enclosed figures, the inflator device 14 is preferably in the form of a cylindrical gas cartridge.

As shown in figure 3, the inflator device 14 has a connecting end 16 designed to be connected to the inflatable member 12. In detail, the connecting end 16 is preferably inserted and blocked in a gas tightly manner into an opening 18 of the inflatable member 12.

As it is known in the art, the connecting end 16 of the inflator device 14 can be removably connected to the inflatable member 12 by means of connecting means designed to assure a gas tightly connection. In the meaning of the present invention, the connecting means are considered to be a part of the inflator device.

As visible in figures 3 and 11, such connecting means can comprise a connecting cap 20 designed to be fastened at the opening 18 of the inflatable member 12. Preferably the cap is fastened inside the opening 18 by means of a clamp 22 (see figure 3).

Alternatively, the connecting end 16 of the inflator device 14 can be interlocking fixed to the connecting cap 20.

Preferably, the connecting end 16 of the inflator device 14 can be provided with an external thread suitable for being screwed into a corresponding internal thread provided inside the connecting cap 20 (see figure 3).

The inflator device 14 can be triggered by means of an electrical or mechanical mechanism.

In case of an electrical activation, the wearable protection device 10 comprises at least one sensor 24 designed to detect forces acting on the wearable protection device 10.

The sensor 24 can be applied, for example, at the shoulder portion of the wearable protection

device 10 (see figure 1).

The sensor 24 can be an accelerometer, designed to detect the accelerations acting on the wearable protection device 10, or a gyroscope, designed to detect movements and orientation of the wearable protection device 10.

Preferably, the wearable protection device 10 comprises a plurality of sensors 24.

The wearable protection device 10 can further comprise a control unit 26 (see figure 1) designed to process the data detected by the sensor 24 and to send a triggering signal to the inflator device 14, when a crash situation is identified.

As a "crash situation" should be intended a situation wherein the wearable protective device 10 undergoes a sudden acceleration/deceleration and/or a sudden variation in its orientation and in its angular velocity.

In particular, when the user of the wearable protective device 10 is on a vehicle, like for example a motorcycle, a sudden acceleration or deceleration undergone by the wearable protection device 10 can identify that the motorcycle has hit an obstacle or that the user has lost the control of the motorcycle being thrown from the saddle.

The control unit 26 is designed to process at regular time intervals (for example 1ms) the data received from the sensor 24 so as to obtain information about the forces acting on the wearable protection device 10.

If the control unit 26 detects, on the basis of an algorithm implemented therein, that a crash situation is occurring, a triggering signal is sent from the control unit 26 to the inflator device 14 so that the inflatable member 12 can be inflated.

In case of a mechanical activation of the inflator device 14, the latter can be triggered by using an activation cable or tether connecting for example a vehicle, like a motorcycle, or a ladder, if the wearable protection device is used by a worker, to the wearable protection device 10.

The activation cable has a first end connected to the motorcycle, or to the ladder, and a second end fixed to a triggering device, designed to trigger a firing pin, which in turn is configured to activate the inflator device 14.

If a separation of the user from the motorcycle or the ladder occurs, as it is typically caused by a fall and/or an impact, the activation cable or the tether triggers the firing pin by means of the triggering device causing the deployment of the inflator device.

The activation cable can also be manually activated.

In case of an electrical activation of the inflatable member 12, the inflator device 14 is electrically connected to the control unit 26.

In detail, the inflator device 14 is connected to the control unit 26 by means of a cable having at its end an electronic connector 28 (see for example figures 4 and 6).

Alternatively, the inflator device 14 can be wirelessly connected to the control unit 26.

As it is shown in figures 1 and 2, the wearable protection device 10 also comprises a housing

30 designed for accommodating the inflator device 14.

Advantageously, the housing can also accommodate, in addition to the inflator device 14, the control unit 26 and the sensors 24 of the wearable protection device 10.

The housing 30 is preferably box-shaped.

Advantageously, the housing 30 can comprise a base 32 and a cover portion 34 designed to be fastened to each other (see for example figure 6).

Preferably the base 32 and the cover portion 34 are fastened to each other by means of removably fastening means, like for example rivets, bolts, snap connectors.

Advantageously, the base 32 defines a storage cavity 36. Preferably, said storage cavity 36 is delimited by perimetral walls 37 of the base 32.

Said storage cavity 36 can be selectively closed by the cover portion 34, which acts as a lid of the storage cavity.

In the closed configuration, the housing 30 is in any case provided with openings allowing the passages of any cable connecting the inflator device 14 to the control unit 26 or to a different element and the accommodation of the portion of the inflatable member 12 in strict proximity to the inflator device 14.

As shown in figure 1, the housing 30 can be directly applied to the wearable protection device 10. For example, if the wearable protection device 10 is a garment, the housing 30 can be inserted inside a pocket 11 provided in the garment or it can be fastened to an inner or outer surface of the garment.

Preferably, the housing 30 is provided at the back portion of the garment.

Alternatively, the housing 30 can be indirectly applied to the wearable protection device 10. For example, as it is shown in figure 2, the housing 30 can be applied to the wearable protection device by means of a further protection element 13 fastened to the wearable protection device 10.

As shown in figure 2, the wearable protection device 10 can be a vest provided with a back protector 13. In this case, the housing 30 can be fastened to the back protector 13, being inserted inside a seat provided in the back protector 13.

According to the invention, the housing 30 comprises detection means 33 suitable for moving between a first configuration and a second configuration. In particular, the insertion of the inflator device 14 inside a holding seat 40 of the housing 30 causes the moving of the detection means 33 from the first configuration to the second configuration.

As it will appear clearly from the following description, the detection means 33 are able to detect the presence of the inflator device 14 inside the housing 30 and to give a reliable feedback to the user about such a condition.

In particular, the moving of the detection means 33 from their first configuration to their second configuration will result in a mechanical or electrical output signaling that the inflator

device 14 is properly inserted inside the housing 30 thereby being ready to inflate the inflatable member 12.

With reference at first to figures 4-19, the detection means 33 can comprise spacing means 38. Advantageously, in the first configuration the spacing means 38 are adapted to keep spaced apart the base 32 and the cover portion 34 of the housing 30 and in the second configuration the spacing means 38 are suitable for permitting the cover portion 34 to lay against the base 32.

In particular, the insertion of the inflator device 14 inside its holding seat 40 causes the moving of the spacing means 38 from the first configuration to the second configuration.

Thanks to the provision of the spacing means 38, the cover portion 34 can be fastened to the base 32 of the housing 30 only if the inflator device 14 is properly inserted inside its holding seat 40.

In case the inflator device 14 is not properly inserted inside the holding seat 40 or the user has forgot to insert the inflator device 14 inside the housing 30, the spacing means 38 remain thus in their first configuration, thereby keeping spaced apart the base 32 and the cover portion 34 so as not to permit the mutual fastening of these elements.

In this way, the user has a simple and reliable feedback about the fact that the wearable protection device 10 is not in a proper condition for allowing the inflation of the inflatable member 12.

Similarly, the spacing means 38 can be designed to remain in their first configuration, even in case the inflator device 14 is not coupled, or not properly coupled, to the inflatable member 12.

As a matter of fact, as it will be explained in detail in the following, the spacing means can be also designed to detect the presence of any connecting cap used for connecting the inflator device to the inflatable member.

At the same time, if the inflator device 14 is inserted in a proper way inside its holding seat 40 and is properly coupled to the inflatable member 12, the spacing means 38 are suitable for moving in their second configuration, thereby permitting the cover portion 34 to abut against the perimetral walls 37 of the base 32. In this way, the fastening of the cover portion 34 to the base 32 is permitted and thus the user has a confirmation that the inflator device 14 has been properly inserted inside its holding seat 40 and the inflatable member 12 of the wearable protection device 10 can be safely activated if needed.

In other terms the spacing means 38 are able to detect the presence of the inflator device 14 and to permit the proper closure of the housing 30, only if the inflator device 14 is rightly inserted inside its holding seat 40 and is properly coupled to the inflatable member 12.

As shown in the enclosed figures, the spacing means 38 can be arranged between the base 32 and the cover portion 34 of the housing 30.

Preferably, the spacing means 38 are fastened to the base 32 so as to be arranged inside the storage cavity 36 defined by the base 32.

Alternatively, the spacing means 38 can be fastened to the cover portion 34.

Preferably, the spacing means 38 are hinged to a support member 42 of the base 32 (see figure 12 or figure 16). Said support member 42 can be provided at a bottom wall of the base 32.

Advantageously, according to a first embodiment, the spacing means 38 can rotate around a pivot point 44 of the support member 42. Preferably, said pivot point 44 extends along a longitudinal axis L of the housing 30 (see figure 12). As shown in the enclosed figures, the longitudinal axis L of the housing 30 substantially extends parallel to the longitudinal axis W of the inflator device 14.

In a different embodiment, not shown in the enclosed figure, the spacing means can rotate around a pivot point extending along an axis arranged along a different direction.

As shown for example in figure 12, the pivot point 44 can consist of a pin inserted between two shoulders 45 of the support member 42, the pin 44 engaging an articulation hole 46 provided at a bottom portion of the spacing means 38.

Preferably, elastic means 48 are arranged between the support member 42 and the spacing means 38 so that the rotation of the spacing means 38 from the first configuration to the second configuration takes place by overcoming the elastic force exerted by the elastic means 48.

In detail, the elastic means 48 can comprise a coiled spring having a first end 49 abutting against the base 32, or the support member 42, and a second end 50 abutting against the spacing means 38. Preferably, said second end 50 is inserted in a seat 53 arranged at the bottom portion of the spacing means 38.

In particular, the elastic means 48 can push with the second end 50 against the spacing means 38 and react with the opposite first end 49 against the base 32, or the support member 42.

The provision of the elastic means 48 prevents the movement of the spacing means 38 from the first configuration to the second configuration to take inadvertently place. Similarly, the elastic means 48 assure the return of the spacing means 38 into their first configuration when the inflator device 14 is removed from its holding seat 40.

As it is shown, for example in figures 7-13, the spacing means 38 can comprise at least one lever 39. Preferably, said lever 39 is L-shaped, having a first arm 52 engageable with the base 32 of the housing 30 and a second arm 54, engageable with the inflator device 14.

In particular, the first arm 52 of the L-shaped lever 39 lies on a plane substantially parallel to a bottom surface of the base 32, while the second arm 54 of the L-shaped lever 39 extends along a direction substantially perpendicular with respect to the bottom surface of the base 32.

In the first configuration, the first arm 52 of the lever 39 abuts against a matching part 56 provided at the bottom surface of the base 32.

Advantageously, said matching part 56 can be arranged at the footing part of the support member 42 (see figure 12).

Once the lever 39 is fastened at the support member 42, the matching part 56 is preferably arranged offset with respect to the articulation hole 46 of the lever 39. Advantageously, the matching part 56 is interposed between the holding seat 40 and the articulation hole 46.

In this way, the matching part 56 can act as a wedge allowing the rotation of the lever 39 in only one direction if a force is applied at the second arm 54, the opposite rotation being blocked by the abutment between the matching part 56 and the first arm 52.

Advantageously, thanks to the mutual positioning between matching part 56, articulation hole 46 and holding seat 40, once the lever 39 is in its first configuration, it can rotate only away from the holding seat 40 inside which the inflator device 14 is inserted.

The rotation of the lever 39 between the first configuration and the second configuration is schematically shown in figure 8, wherein the direction of the rotation undergone by the lever 39 is indicated by the arrow A.

In particular, in the first configuration a distal end 58 of the second arm 54 is designed to project from the base 32, in particular from the storage cavity 36 defined therein, so as to prevent the cover portion 34 to lay against the base 32 and to close the space cavity 36 (see for example figure 9).

In the second configuration, the distal end 58 of the second arm 54, after a rotation of the lever 39 around the pivot point 44, is designed to be retracted inside the base 32, in particular inside the storage cavity 36 defined therein, so as to permit the abutment between the cover portion 34 and the base 32. After such an abutment the cover portion 34 can thus be fastened to the base 32, so as to close the storage cavity 36.

Alternatively, according to the embodiment shown in figures 14-19, the spacing means 38 can be coupled to the support member 42 of the base 32 so as to be adapted to translate along a transversal axis T of the housing 30. In figures 16-17 the direction of the translation undergone by the spacing means 38 is indicated by the letter B.

In this embodiment, the spacing means 38 preferably comprises at least one stem 70 and at least one rod 74 coupled to each other; said at least rod 74 being slidably inserted between the shoulders 45 of the support member 42. The stem 70 and the rod 74 can be integrally made. Alternatively, the stem 70 can be rigidly coupled to the rod 74.

As it is shown for example in figures 16 and 17, the stem 70 is preferably arranged perpendicular with respect to the rod 74. The assembly formed by the stem 70 and the rod 74 is T-shaped, the rod 74 being designed to slidably engage corresponding holes provided in the shoulders 45 of the support member 42.

The shape coupling between the rod and the holes of the shoulders 45 is designed to prevent any rotation of the rod around the axis T.

Similarly to the embodiment previously disclosed, elastic means 48 are arranged between the support member 42 and the spacing means 38 so that the translation of the spacing means 38 from the first configuration to the second configuration takes place by overcoming the elastic force exerted by the elastic means 48.

In detail, the elastic means 48 can comprise a coiled spring having a first end abutting against the support member 42, namely the shoulder 45 of the support member 42, and a second end abutting against the stem 70.

In particular, the elastic means 48 can push with the second end against the spacing means 38, namely the stem 70, and react with the opposite first end 49 against the support member 42, namely the shoulder 45 of the support member 42.

Also in this case, the provision of the elastic means 48 prevents the translation movement of the spacing means 38 from the first configuration to the second configuration to take inadvertently place.

As it is shown, for example in figures 15-19, the rod 74 is engageable with the inflator device 14 and the stem 70 is engageable with an abutment 72 provided on an inner surface 35 of the cover portion 34. The inner surface 35 is the surface of the cover portion 34 opposite to the base 32.

In particular, the rod 74 lies on a plane substantially parallel to a bottom surface of the base 32, while the stem 70 extends along a direction substantially perpendicular with respect to the bottom surface of the base 32.

In the first configuration (see figure 18), the stem 70, specifically a distal end 73 of the stem 70, is designed to abut against the abutment 72 if the cover portion 34 is positioned close to the base 32.

In particular, the height of the stem 70 and the abutment 72 is selected so as to prevent the cover portion 34 to close the base 32, in detail to close the storage cavity 36. The contact between the stem 70 and the abutment 72 keeps spaced apart the base 32 and the cover portion 34 so as not permit the mutual fastening of these elements.

In moving into the second configuration (see figure 19), the rod 74 translates along the transversal axis T and this movement causes a corresponding translation of the stem 70 which will no longer be positioned in correspondence of the abutment 72, if the cover portion 34 is positioned close to the base 32.

In this way, the cover portion 34 can be positioned in contact with the base 32, thereby permitting the fastening of the cover portion 34 to the base 32, so as to close the storage cavity 36 inside which also the stem 70 and the abutment 72 are arranged in a staggered configuration.

Alternatively, as it is shown in figures 20-24, the detection means 33 can comprise one or more detectors 80, 90, 100 designed to detect the presence of the inflator device 14 in its holding seat 40. The detectors 80, 90, 100 are preferably arranged on the base 32, in close proximity to the holding seat 40.

However, said detectors can also be arranged on an area of the cover portion designed to be superimposed or to partially form the holding seat 40.

Similarly to the embodiments previously disclosed, the detectors 80, 90, 100 are designed to move from the first configuration to the second configuration once the inflator device 14 is present into the housing 30 and in particular when the inflator device 14 is inserted in its holding seat 40.

Advantageously, the detectors 80, 90, 100 are adapted to electrically signal to a further element of the wearable protection device 10 when they move from the first configuration to the second configuration.

The moving of the detectors 80, 90, 100 from the first configuration to the second configuration can be electrically signaled, for example by means of a connector 84, to the control unit 26 of the wearable protection device 10 or alternatively to an additional signaling device (for example visual or acoustic, not shown in the enclosed figures) which can signal to the user that the inflator device 14 is properly inserted into the housing 30.

The detectors 80, 90, 100, differently from the spacing means 38 of the embodiments of figures 3-19, are not able to prevent the fastening of the cover portion 34 to the base 32 if the inflator device 14 is not inserted inside its holding seat 40. However, said detectors 80, 90, 100 are adapted to provide clear and reliable feedback to the user about the presence of the inflator device 14 inside the housing 30. In any case, if the inflator device 14 is electrically activated by means of the control unit 26, the latter can be programmed for being switched in a "on status" if the detectors 80, 90, 100 are in their second configuration and thus the inflator device 14 is inserted inside its holding seat 40. In the "on status" the control unit is able to send a triggering signal to the inflator device 14 in case of a danger situation. When not in the "on status" the control unit is not able to send a triggering signal to the inflator device 14.

With reference to figures 20-24, the detector can be a mechanical switch 80 or a proximity sensor 90 or a photocell sensor 100.

Different types of sensors can however be used in order to meet specific needs.

The mechanical switch 80 can be a limit switch (see figures 20-22). Preferably, the limit switch 80 is provided with an actuating arm 82 designed to move from a first configuration, wherein it is in a non actuated condition, to a second configuration, wherein it is in an actuated condition. In detail, as it is schematically shown in figure 22, the arm 82 is actuated by the presence of the inflator device 14 in the holding seat 40. In particular, the arm 82 is designed

to bend once it gets in contact with the outer surface of the inflator device 14.

Alternatively, as it is shown in figure 23, the detector can be a proximity sensor 90. The proximity sensor 90 is able to detect the presence of the inflator device 14 in the holding seat 40 without physically contacting the inflator device 14.

The proximity sensor 90 is provided with a sensing surface 92 designed to detect the absence or the presence of the inflator device 14 in its holding seat 40.

In particular, the proximity sensor is in the first configuration, when the sensing surface 92 detects the absence of the inflator device 14, and it is in the second configuration, when the sensing surface 92 detects the presence of the inflator device. The presence of the inflator device is detected if the distance between the inflator device and the sensing surface is within the sensing range of the sensing surface.

The proximity sensor 90 can be of the optical, laser or ultrasonic type.

With reference to figure 24, the detector can be a couple of photocell sensors 100. Preferably, the photocell sensors 100 are positioned on opposite sides with respect to the holding seat 40 of the inflator device 14.

One photocell sensor 100 is provided with an emitting surface 102 and one photocell sensor 100 is provided with a receiving surface 104.

Also the photocell sensors 100 are able to detect the presence of the inflator device 14 in the holding seat 40 without physically contacting the inflator device 14.

In particular, the photocell sensors 100 are in the first configuration, when the emitting and receiving surfaces 102, 104 detect the absence of the inflator device 14, and they are in the second configuration, when the emitting and receiving surfaces 102, 104 detect the presence of the inflator device. The presence of the inflator device is detected if the inflator device 14 is positioned between the emitting and receiving surfaces 102, 104, namely between the sensors 100. As a matter of fact, in this case, the light emitted from the emitting surface 102, being blocked by the inflator device 14, does not reach the receiving surface 104.

As previously anticipated, the detection means 33 are designed to move into their second configuration only when the inflator device 14 is properly housed inside its holding seat 40 arranged in the housing 30.

The holding seat 40 of the inflator device 14 in a preferred embodiment is provided at the base 32 of the housing 30.

Preferably, the holding seat 40 is defined by one or more abutment surfaces 60 defining a seat complementary to the shape of the inflator device 14.

The holding seat 40 can also be defined by one or more recesses provided in the base or in the cover portion.

Advantageously, the abutment surfaces 60 can project from the base 32 of the housing 30 and are designed to firmly fasten the inflator device 14 once it is inserted inside the housing.

Advantageously, the holding seat 40 is designed to also house the connecting means by means of which the inflator device is coupled to the inflatable member.

In particular, the holding seat 40 can be designed to house the inflator device 14 and the connecting cap 20 (see figures 11 and 15). In particular, the abutment surfaces 60 can be arranged along the base 32 of the housing 30 so as to define a profile complementary to the assembly formed by the inflator device 14 and the connecting cap 20. In this way, the inflator device 14, if fastened to the inflatable member 12 by means of a connecting cap 20, can be inserted inside its holding seat 40 only if the connection between the inflator device 14 and the connecting cap 20 has been properly carried out. Otherwise, the inflator device 14 and/or the connecting cap 20 will at least partially project from the base 32, in particular from the storage cavity 36.

As previously anticipated, the moving of the detection means 38 from their first configuration to their second configuration is designed to take place when the inflator device 14 is inserted inside its holding seat 40.

Similarly, if the inflator device comprises connecting means for being connected to the inflatable member, the moving of the detection means from their first configuration to their second configuration is designed to take place when the inflator device 14 with the connecting means is inserted inside its holding seat 40.

As a matter of fact, with reference to the embodiments of figure 3-19, the spacing means 38 are arranged in proximity of the holding seat 40 so that the spacing means 38 are designed to get in contact with the inflator device 14 when the latter is inserted inside its holding seat 40.

In particular, in case the spacing means comprise at least one L-shaped lever 39, the second arm 54 of the lever 39 is designed to get in contact with the inflator device 14.

In detail, the contact between the inflator device 14 and the spacing means 38 is substantially designed to realize a cam and follower mechanism.

In particular, when the inflator device 14 is inserted inside its holding seat 40, it gets in contact with the second arm 54 of the lever 39. The outer surface of the inflator device 14 acts as a cam and the second arm 54 acts as a follower.

Due to the force exerted by the inflator device 14 against the lever 39, the second arm 54 is pushed away from the inflator device 14 so that its distal end 58 can be retracted inside the base.

In particular, the lever 39 can rotate around its pivot point 44 in the direction not blocked by the matching part 56. The lever 39 can thus reach the second configuration and permits the cover portion 34 to be properly fastened to the base 32.

Once the inflator device 14 is removed from its holding seat 40, the lever 39 can move back in its first configuration thanks to the force exerted by the elastic means 48 arranged between the support member 42 and the lever 39.

The provision of the matching part 56 assures that, in case the cover is pushed against the base without having inserted the inflator device inside its holding seat, it is not permitted the moving of the lever 39 to a different configuration that would allow the cover portion 34 to abut against the base 32.

As a matter of fact, in this case, the stem 70 remains blocked in its first configuration by keeping spaced apart base and cover portion of the housing.

In case the spacing means 38 comprise at least one stem 70 and at least one rod 74, the rod 74 is designed to get in contact with the inflator device 14.

In detail, also in this case the contact between the inflator device 14 and the spacing means 38 is substantially designed to realize a cam and follower mechanism.

In particular, when the inflator device 14 is inserted inside its holding seat 40, it gets in contact with the rod 74. The outer surface of the inflator device 14 acts as a cam and the rod 74 acts as a follower.

Due to the force exerted by the inflator device 14 against the rod 74, the stem 70 can translate along the T axis so as not to be positioned in correspondence of the abutment 72, should the cover portion 34 be applied over the base 32.

In particular, the assembly formed by the stem 70 and the rod 74 can thus reach the second configuration and permits the cover portion 34 to be properly fastened to the base 32.

Once the inflator device 14 is removed from its holding seat 40, the stem 70, and the rod 74, can move back in its first configuration thanks to the force exerted by the elastic means 48 arranged between the support member 42 and the stem 70.

The provision of the shoulders 45 of the support member 42 assures that the stem 70 remains correctly positioned at the support member 42. Moreover, the shape coupling between the rod and the holes provided in the shoulders of the support member assures that no rotation or different movements of the stem 70 can be permitted in case the cover is pushed against the base without having inserted the inflator device inside its holding seat.

As a matter of fact, also in this case, the lever 39 remains blocked in its first configuration by keeping spaced apart base and cover portion of the housing.

As anticipated, the detectors 80, 90, 100 are designed to detect the presence of the inflator device 14 inside its holding seat providing a different feedback with respect to the spacing means 38. In particular, the detectors 80, 90, 100 are designed to provide a direct feedback not linked to the mutual fastening of the cover portion to the base.

The feedback of the detectors 80, 90, 100, as previously anticipated, can be used to directly switch on the control unit or to provide a visual or acoustic signal, only if the detectors are in their second configuration.

Preferably, the wearable protection device 10 can comprise a plurality of detection means 33 spaced apart from each other. Advantageously, the plurality of the detection means 33 can

comprise detection means of different types. For example, as it is shown in figure 8, the detection means 33 can comprise two levers 39 positioned along the side of the holding seat.
Alternatively, as it is shown in figures 14 and 15, a lever 39 can be used in combination with the assembly formed by the stem 70 and the rod 74.
In case the housing 30 comprises two or more spacing means 38, the spacing means 38 of said plurality can be arranged so as to be able to rotate along a single longitudinal axis L or to translate along a single transversal axis T.
Alternatively, in order to better cooperate with the inflator device 14, the spacing means 38 can be arranged so as to be staggered along the longitudinal axis L or along the transversal axis T.
The provision of a plurality of spacing means 38, for example two L-shaped levers 39 like those shown in figure 8, is particularly useful in case the inflator device 14 is fastened to the inflatable member 12 by means of a connecting cap 20.
As a matter of fact, in this case, the provision of a second L-shaped lever 39, spaced apart from a first L-shaped lever, assures a higher safety. A first lever 39A can control the presence of the inflator device 14, while the second lever 39B can control the presence of the connecting cap 20 (see for example figure 11).
As shown in figure 10, in case only the inflator device 14 is properly inserted inside the holding seat 40 causing the moving of the first lever 39A in its second configuration, the closing of the housing 30 would be in any case prevented by the presence of the second lever 39B that, due to the absence of the connecting cap 20, is still in its first configuration.
Similarly, in case only the connecting cap 20 is properly inserted inside the holding seat 40 causing the moving of the second lever 39B in its second configuration, the closing of the housing 30 would be in any case prevented by the presence of the first lever 39A that, due to the absence of the inflator 14, is in its first configuration.
Similarly, with reference to the embodiment of figures 14 and 15, the lever 39 can be used to detect the presence of the inflator device 14 and the assembly formed by the stem 70 and the rod 74 can be used to detect the presence of the connecting cap 20.
Only in case both elements are properly housed inside the holding seat 40, the lever 39 and the assembly formed by the stem 70 and the rod 74 are both in their second configuration allowing the closing of the housing 30.
Advantageously, the provision of the spacing means 38 can be combined with sensing means 62, 64 arranged on opposite facing surfaces of the base 32 and cover portion 34 (see figure 13).
The sensing means 62, 64, for example a magnet 62 designed to cooperate with a proximity sensor 64, can advantageously signal when the cover portion 34 is positioned in proximity to the base 32, in proximity meaning that the cover portion 34 is at a distance less than 1 cm

from the base.

According to the previous disclosure, such a signal can only be emitted when the spacing means 38 are in their second configuration.

In this way, if the inflatable member 12 of the wearable protection device 10 is electrically activated, the signal emitted by the sensing means 62, 64 can be used to arm the system so as to switch the control unit 26 in an "on status" in which the control unit 26 is able to trigger the inflator device 14 if needed.

Similarly, if the inflatable member 12 of the wearable protection device 10 is mechanically activated, the sensing means 62, 64 can be designed to emit a visual or acoustic signal suitable for signaling to the user that the inflatable member 12 is suitable for being properly inflated if needed.

As anticipated this invention also relates to a method for safely activating the inflatable member 12 of the wearable protection device 10.

Said method comprises the following steps:

- providing a wearable protection device 10 comprising:
    - i) at least one inflatable member 12, suitable for moving between a rest condition, wherein it is in a deflated status, and an operating condition, wherein it is in an inflated status;
    - ii) at least one inflator device 14 designed to be coupled to the at least one inflatable member 12 for inflating the at least one inflatable member 12 once the inflator device is triggered;
    - iii) a housing 30 designed for accommodating the at least one inflator device 14;
- checking if the at least one inflator device 14 and the inflatable member 12 are properly coupled;
- preventing the triggering of the at least one inflator device if a not properly coupling between the at least one inflator device 14 and the inflatable member 12 has been checked;

characterized in that

the checking step is carried out by means of detection means 33 provided in the housing 30 and designed to detect if the at least one inflator device is present inside the housing 30.

Preferably, if the wearable protection device 10 comprises a control unit 26 designed to process data detected by sensors 24 and to send a triggering signal to the inflator device 14 when a danger situation is identified, the detection means 33 are adapted to directly or indirectly signal to the control unit 26 the presence of the at least one inflator device inside the housing.

Advantageously, the presence of the at least one inflator device can be indirectly signaled by the detection means 33 to the control unit 26 by means of sensing means 62, 64 arranged between a base 32 and a cover portion 34 of the housing 30, said sensing means 62, 64 being

able to collaborate with the detection means 33. In this case, the detection means 33 comprises spacing means 38 able to keep spaced apart the base 32 and the cover portion 34 if the inflator device is not inserted inside the housing 30.

Alternatively, the presence of the at least one inflator device can be directly signaled by the detection means 33 to the control unit 26; the detection means 33 comprising detectors 80, 90, 100 suitable for detecting if the inflator device is present inside the housing and to send a corresponding feedback to the control unit 26.

At this point it is clear how the predefined objects may be achieved with the wearable protection device 10 and the method according to the invention.

The detection means 33 assure that the inflation of the inflatable bag can take place only when the inflator device is properly inserted inside its housing and it is properly coupled to the inflator device.

If the detection means 33 comprise spacing means 38 like those shown in figures 2-19, said spacing means assure that the cover portion 34 and the base 32 of the housing 30 of the inflator device 14 can only be fastened if the inflator device 14 is properly inserted inside the housing 30.

If the inflator device 14 is missed or it is not properly inserted inside its holding seat 40, the spacing means 38 cannot be moved in their second configuration and thus the base 32 and the cover portion 34 are spaced apart, preventing a possible fastening of the cover portion 34 onto the base 32.

In this way a further help is provided to a user during the replacement of the inflator device assuring to him a reliable and immediate feedback about the outcome of the replacement.

A reliable feedback is also provided if the detection means 33 comprises detectors 80, 90, 100 able to directly detect whether the inflator device is present inside the housing.

With regard to the embodiments of the wearable protective device described above, the person skilled in the art may, in order to satisfy specific requirements, make modifications to and/or replace elements described with equivalent elements, without thereby departing from the scope of the accompanying claims.

## CLAIMS

1. A wearable protection device (10) comprising:
- at least one inflatable member (12) designed to move between a rest condition, wherein it is in a deflated status, and an operating condition, wherein it is in an inflated status;
- at least one inflator device (14) designed to be coupled to the at least one inflatable member (12) for inflating the at least one inflatable member (12) once the at least one inflator device (14) is triggered;
- a housing (30) designed for accommodating the at least one inflator device (14);
characterized in that said housing (30) comprises detection means (33) suitable for moving between a first configuration and a second configuration; the insertion of the at least one inflator device (14) inside a holding seat (40) of the housing (30) causing the moving of the detection means (33) from the first configuration to the second configuration.

2. Wearable protection device (10) according to claim 1, characterized in that the detection means (33) comprise spacing means (38) and the housing (30) comprises a base (32) and a cover portion (34) designed to be fastened to each other; in the first configuration said spacing means (38) being adapted to keep spaced apart the base (32) and the cover portion (34) and in the second configuration said spacing means (38) being suitable for permitting the cover portion (34) to lay against the base (32).

3. Wearable protection device (10) according to claim 2, characterized in that said spacing means (38) are arranged between the base (32) and the cover portion (34) of the housing (30).

4. Wearable protection device (10) according to claim 2, characterized in that the spacing means (38) are fastened to the base (32) so as to be arranged inside a storage cavity (36) defined by the base (32).

5. Wearable protection device (10) according to claim 2, characterized in that the spacing means (38) are hinged to a support member (42) of the base (32); the spacing means (38) being adapted to rotate around a pivot point (44) of the support member (42) extending along a longitudinal axis (L) of the housing (30).

6. Wearable protection device (10) according to claim 2, characterized in that the spacing means (38) are coupled to a support member (42) of the base (32); the spacing means (38) being adapted to translate along a transversal axis (T) of the housing (30).

7. Wearable protection device (10) according to claim 5 or claim 6, characterized in that elastic means (48) are arranged between the support member (42) and the spacing means (38) so that a rotation or a translation of the spacing means (38) from the first configuration to the second configuration takes place by overcoming the elastic force exerted by said elastic means (48).

8. Wearable protection device (10) according to claim 2, characterized in that said spacing

means (38) comprise at least one lever (39; 39A, 39B).

9. Wearable protection device (10) according to claim 2, characterized in that said spacing means (38) comprise at least one lever (39; 39A, 38B); said at least one lever (39; 39A, 39B) being a L-shaped lever having a first arm (52), engageable with the base (32) of the housing (30), and a second arm (54) engageable with said at least one inflator device (14).

10. Wearable protection device (10) according to claim 9, characterized in that, in the first configuration, the first arm (52) abuts against a matching part (56) provided at a bottom surface of the base (32), said matching part (56) being arranged offset with respect to an articulation hole (46) of the lever (39; 39A, 39B).

11. Wearable protection device (10) according to claim 5, characterized in that, in the first configuration, a distal end (58) of the spacing means (38) is designed to project from the base (32) so as to prevent an abutment between the base (32) and the cover portion (34).

12. Wearable protection device (10) according to claim 5, characterized in that, in the second configuration, a distal end (58) of the spacing means (38) after a rotation of the spacing means (38) around their pivot point (44) is designed to be retracted inside the base (32).

13. Wearable protection device (10) according to claim 6, characterized in that the spacing means (38) comprise at least one stem (70) and at least one rod (74) coupled to each other; said at least one rod (74) being slidably inserted between shoulders (45) of the support member (42).

14. Wearable protection device (10) according to claim 13, characterized in that said at least one stem (70) being arranged perpendicular with respect to the at least one rod (74).

15. Wearable protection device (10) according to claim 13, characterized in that said at least one rod (74) is engageable with said at least one inflator device (14) and said at least one stem (70) is engageable with an abutment (72) provided on an inner surface (35) of the cover portion (34).

16. Wearable protection device (10) according to any one of the preceding claims, characterized in that the holding seat (40) is defined by one or more abutment surfaces (60) defining a seat complementary to the shape of the at least one inflator device (14).

17. Wearable protection device (10) according to any one of the preceding claims, characterized in that the holding seat (40) is further adapted to house connecting means (20) by means of which said at least one inflator device (14) is coupled to the at least one inflatable member (12).

18. Wearable protection device (10) according to the preceding claim, characterized in that the insertion of the at least one inflator device (14) with said connecting means (20) inside the holding seat (40) of the housing (30) causes the moving of the detection means (33) from the first configuration to the second configuration.

19. Wearable protection device (10) according to claim 1, characterized in that the detection

means (33) comprises one or more detectors (80, 90, 100) adapted to electrically signal to a further element of the wearable protection device (10) when said detectors (80, 90, 100) move from the first configuration to the second configuration.

20. Wearable protection device (10) according to claim 19, characterized by comprising a control unit (26) designed to process data detected by one or more sensor (24) and to send a triggering signal to said at least one inflator device (14) if a danger situation is identified; said control unit (26) being programmed for being switched in a "on status" if the detectors (80, 90, 100) are in their second configuration; in the "on status" the control unit (26) being able to send a triggering signal to said at least one inflator device (14).

21. Wearable protection device (10) according to any one of the preceding claims, characterized in that the housing (30) comprises a plurality of detection means (33) spaced apart from each other.

22. Wearable protection device (10) according to claim 21, characterized in that said plurality of detection means (33) comprises detection means of different types.

23. Wearable protection device (10) according to claim 2, characterized by comprising sensing means (62, 64) arranged on opposite facing surfaces of the base (32) and the cover portion (34); said sensing means (62, 64) being designed to signal when the cover portion (34) is positioned in proximity to the base (32).

24. Method for safely activating an inflatable member (12) of a wearable protection device (10); said method comprises the following steps:

- providing a wearable protection device (10) comprising:
    - i) at least one inflatable member (12), suitable for moving between a rest condition, wherein it is in a deflated status, and an operating condition, wherein it is in an inflated status;
    - ii) at least one inflator device (14) designed to be coupled to the at least one inflatable member (12) for inflating the at least one inflatable member (12) once said at least one inflator device (14) is triggered;
    - iii) a housing (30) designed for accommodating said at least one inflator device (14);
- checking if the at least one inflator device (14) and the inflatable member (12) are properly coupled;
- preventing the triggering of the at least one inflator device (14) if a not proper coupling between the at least one inflator device (14) and the inflatable member (12) has been checked;

characterized in that

the checking step is carried out by means of detection means (33) provided in the housing (30) and designed to detect if the at least one inflator device (14) is present inside the housing (30).

25. Method according to claim 24, characterized by providing the wearable protection device

(10) with a control unit (26) designed to process data detected by sensors (24) and to send a triggering signal to said at least one inflator device (14) when a danger situation is identified, the detection means (33) being adapted to directly or indirectly signal to the control unit (26) the presence of the at least one inflator device (14) inside the housing (30).

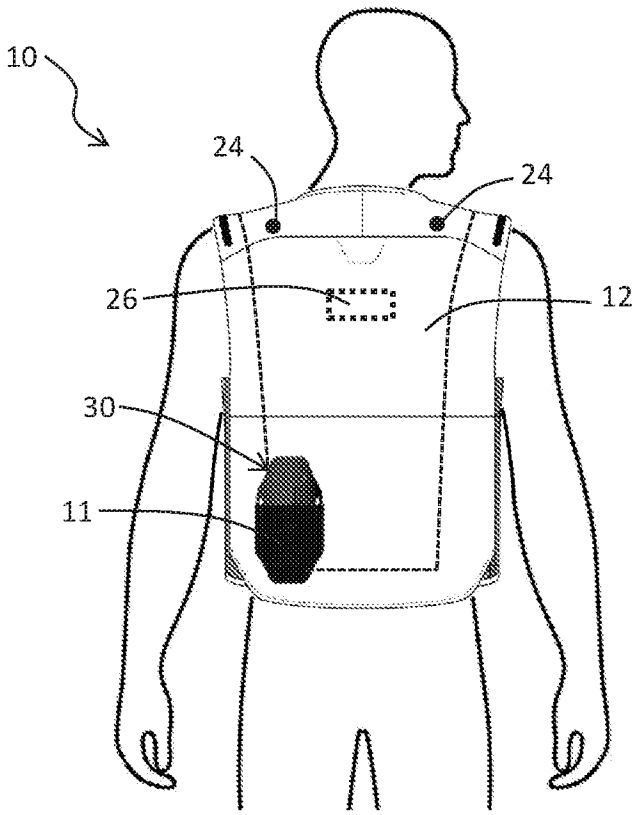


Fig. 1

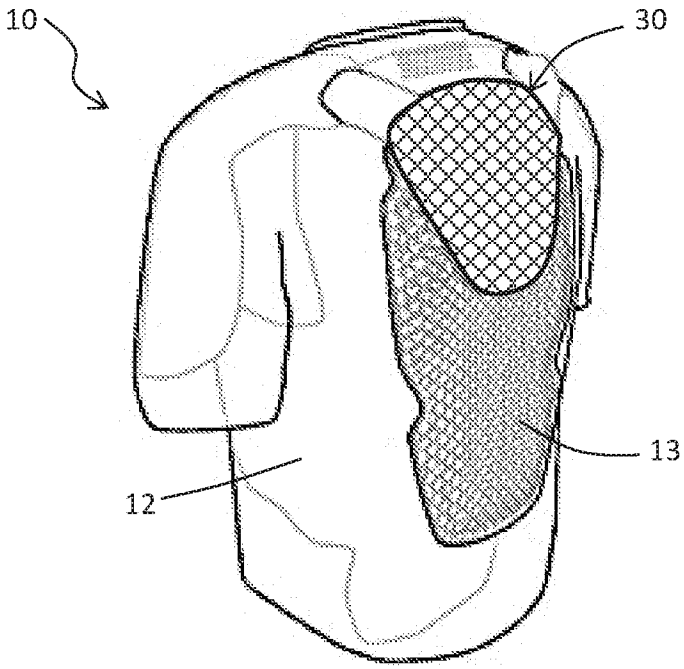


Fig. 2

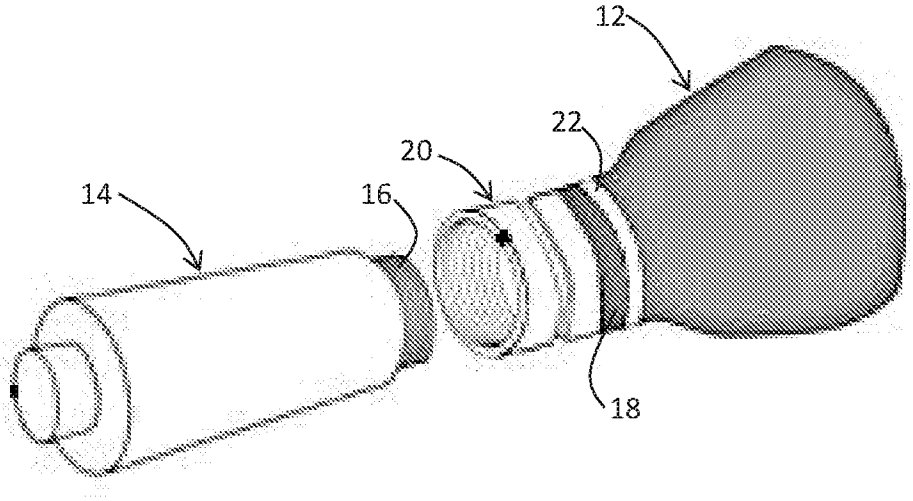


Fig. 3

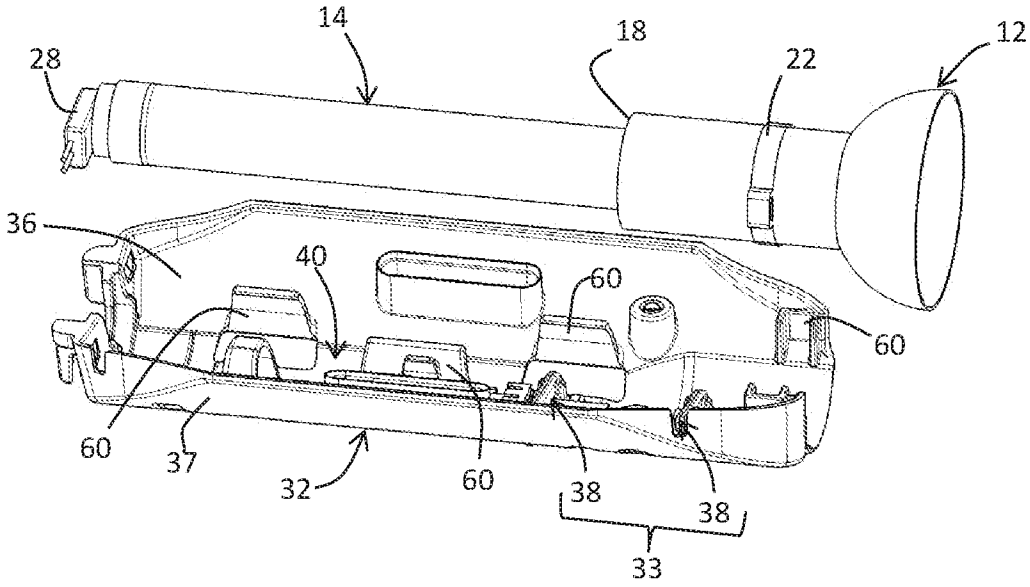


Fig. 4

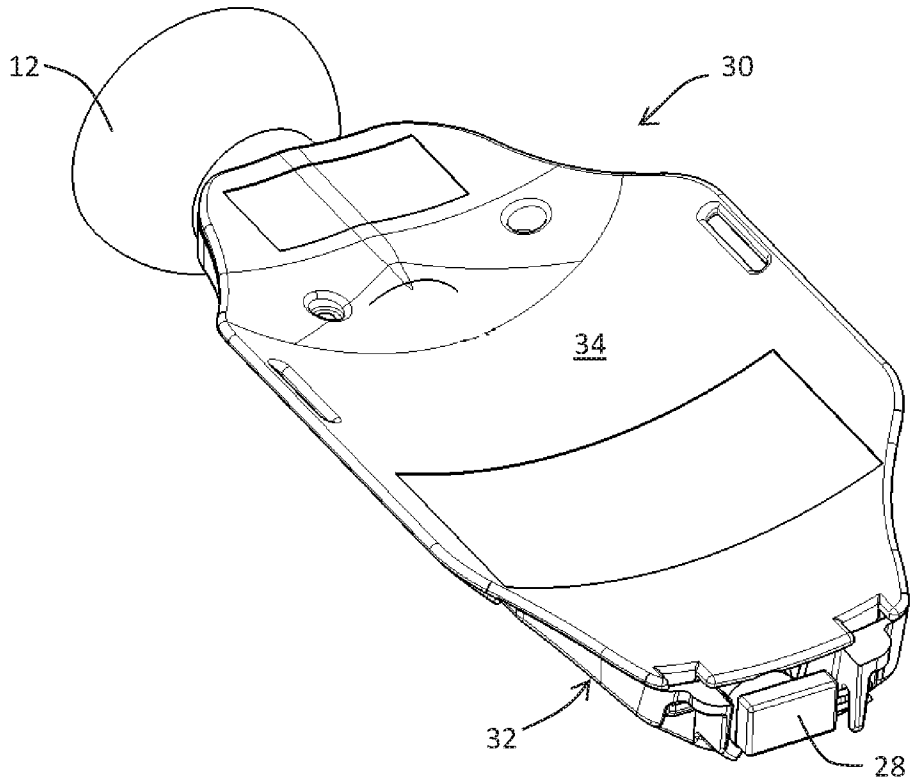


Fig. 5

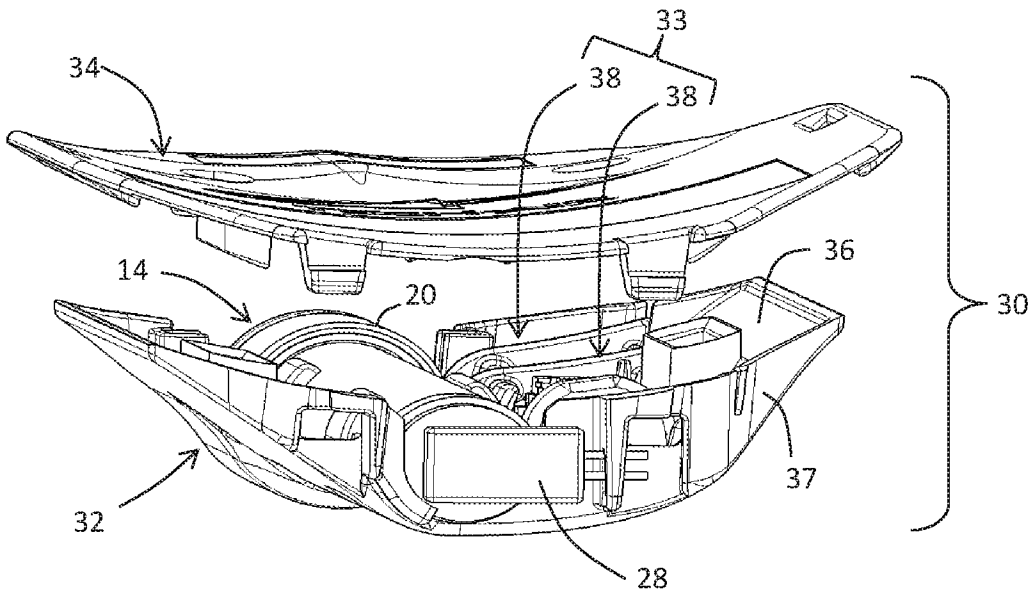


Fig. 6

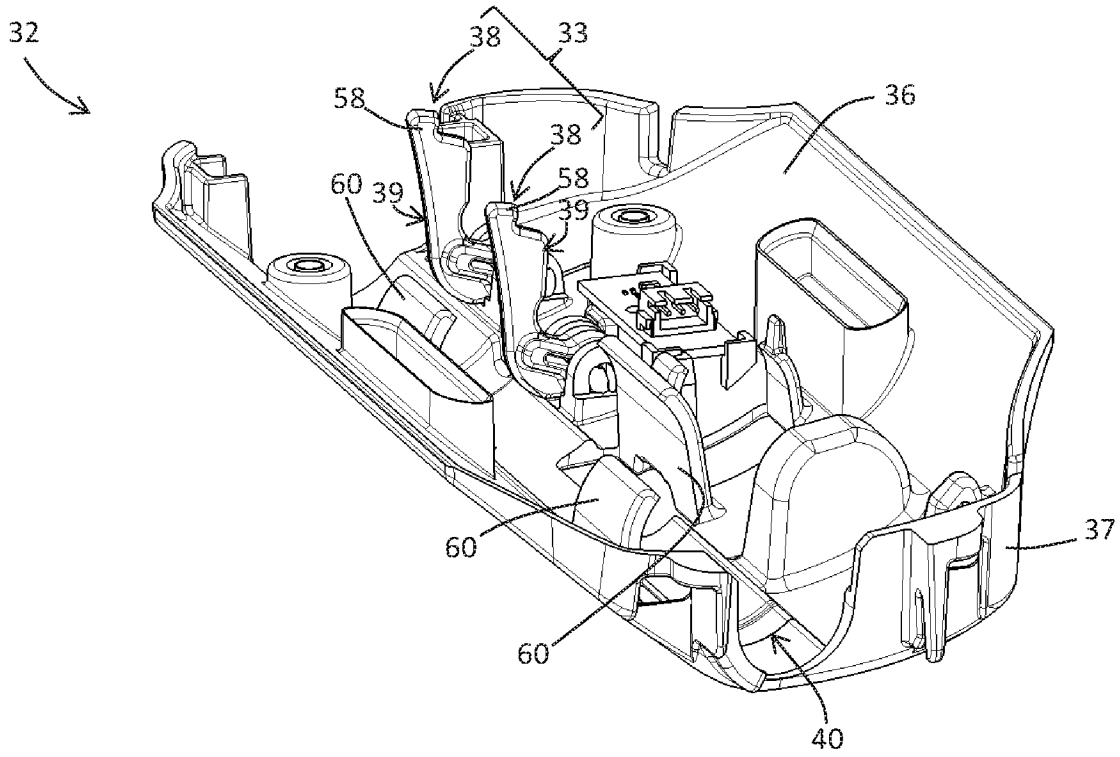
32
38
33
58
36
38
58
60
39
39
60
37
60
40

Fig. 7

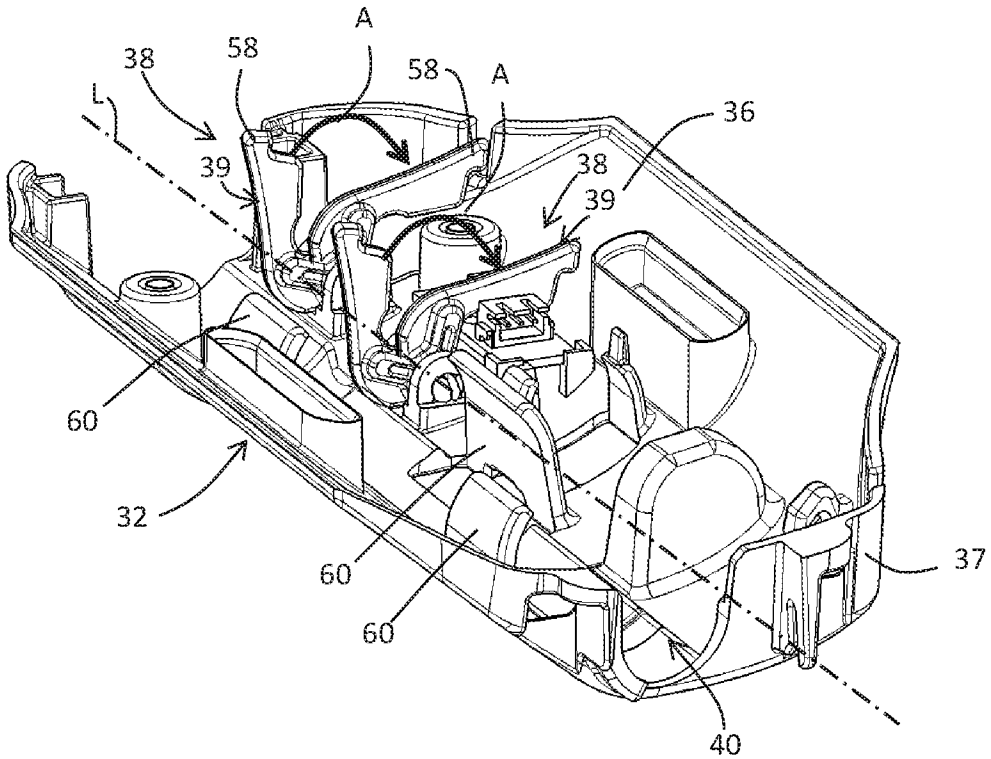
A
38
58
58
A
L
36
39
38
39
60
32
60
37
60
40

Fig. 8

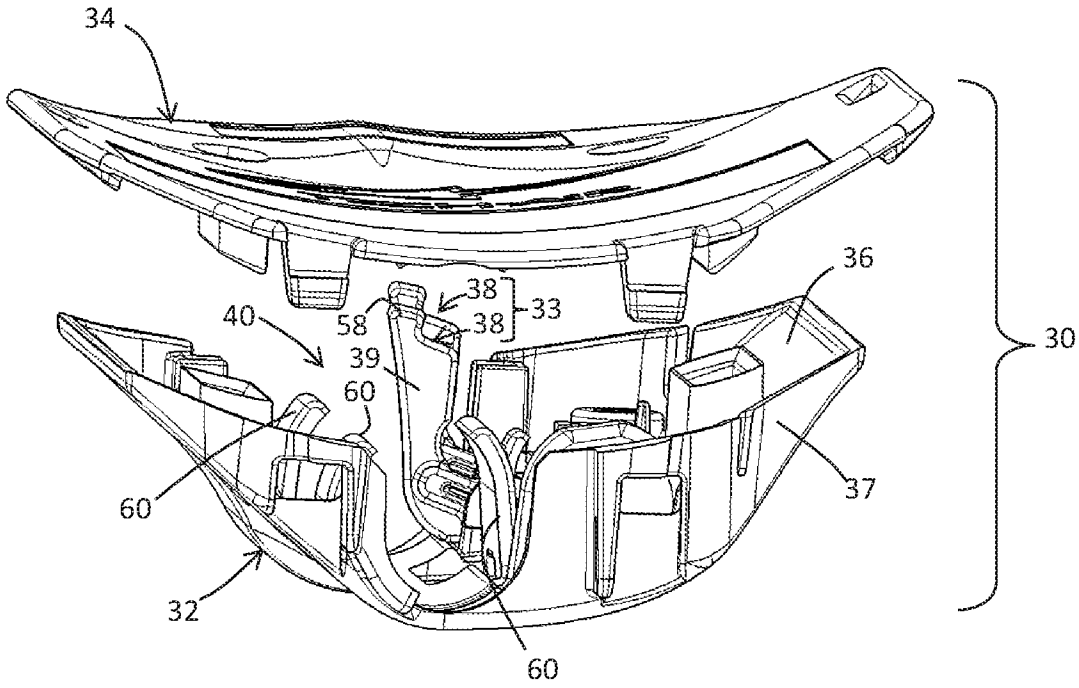
34
36
38
33
58
38
40
39
60
30
60
37
32
60

Fig. 9

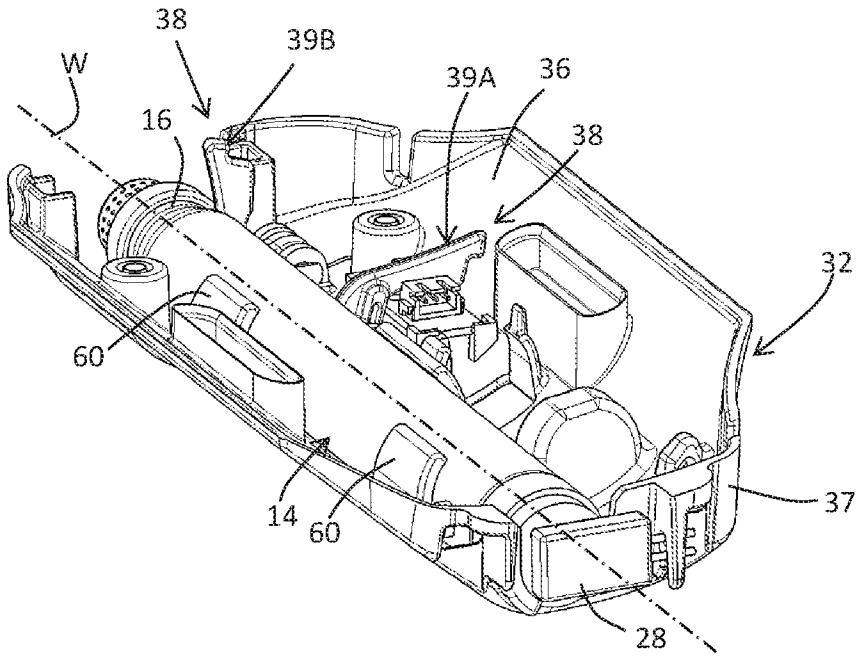
38
39B
W
39A
36
16
38
32
60
14
60
37
28

Fig. 10

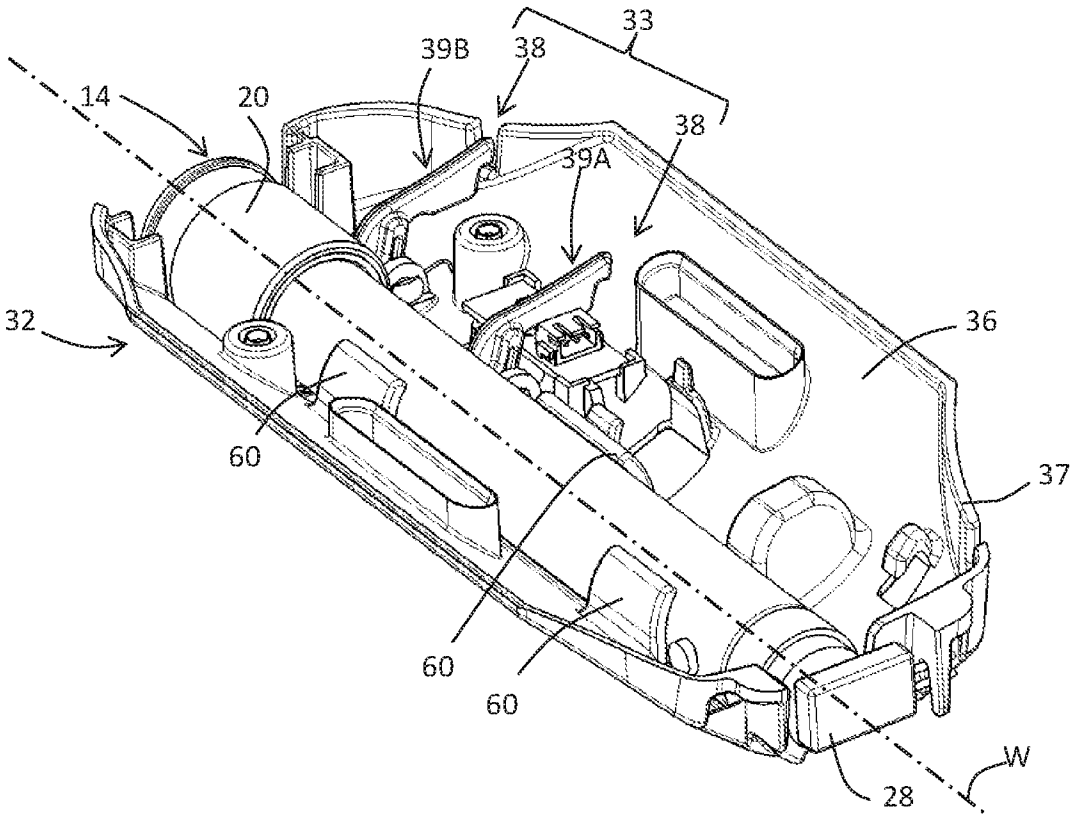
33
39B
38
14
20
38
39A
32
36
60
37
60
60
W
28

Fig. 11

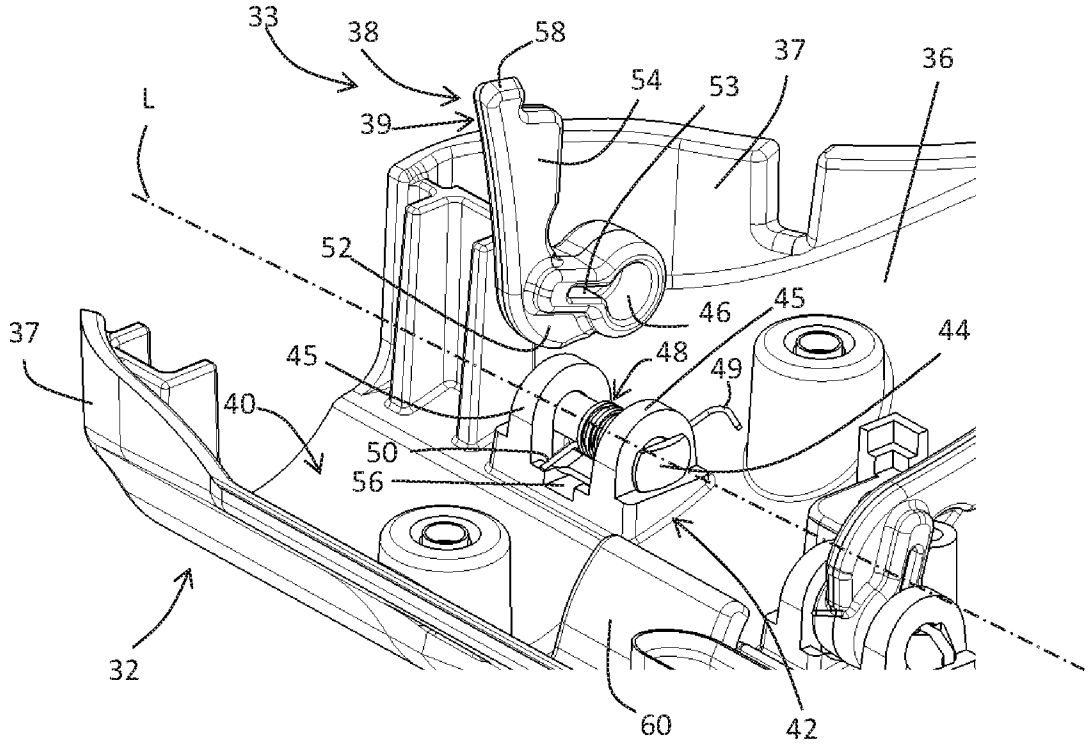
33
38
58
37
36
54
53
L
39
52
46
45
37
45
48
49
44
40
50
56
32
60
42

Fig. 12

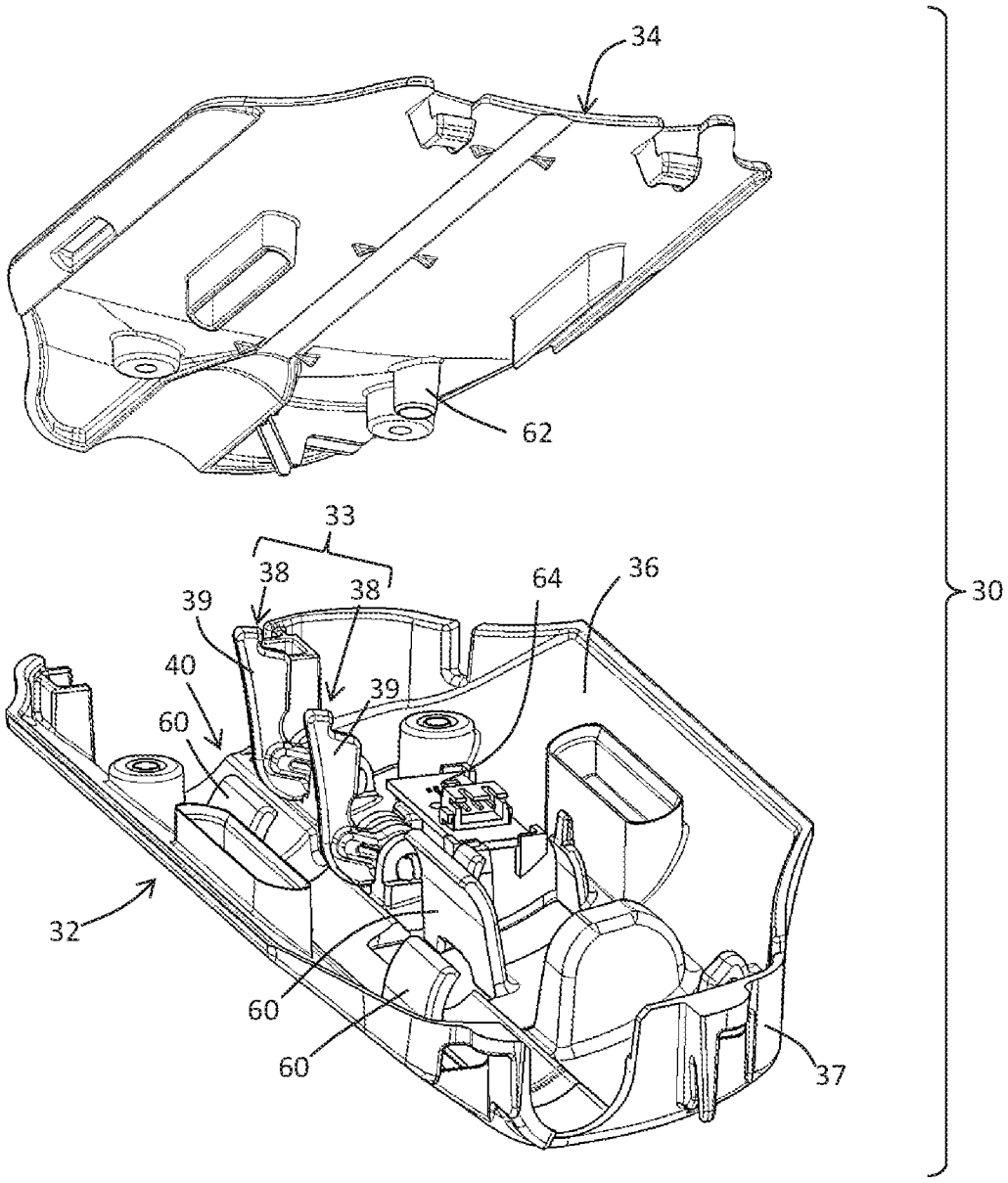


Fig. 13

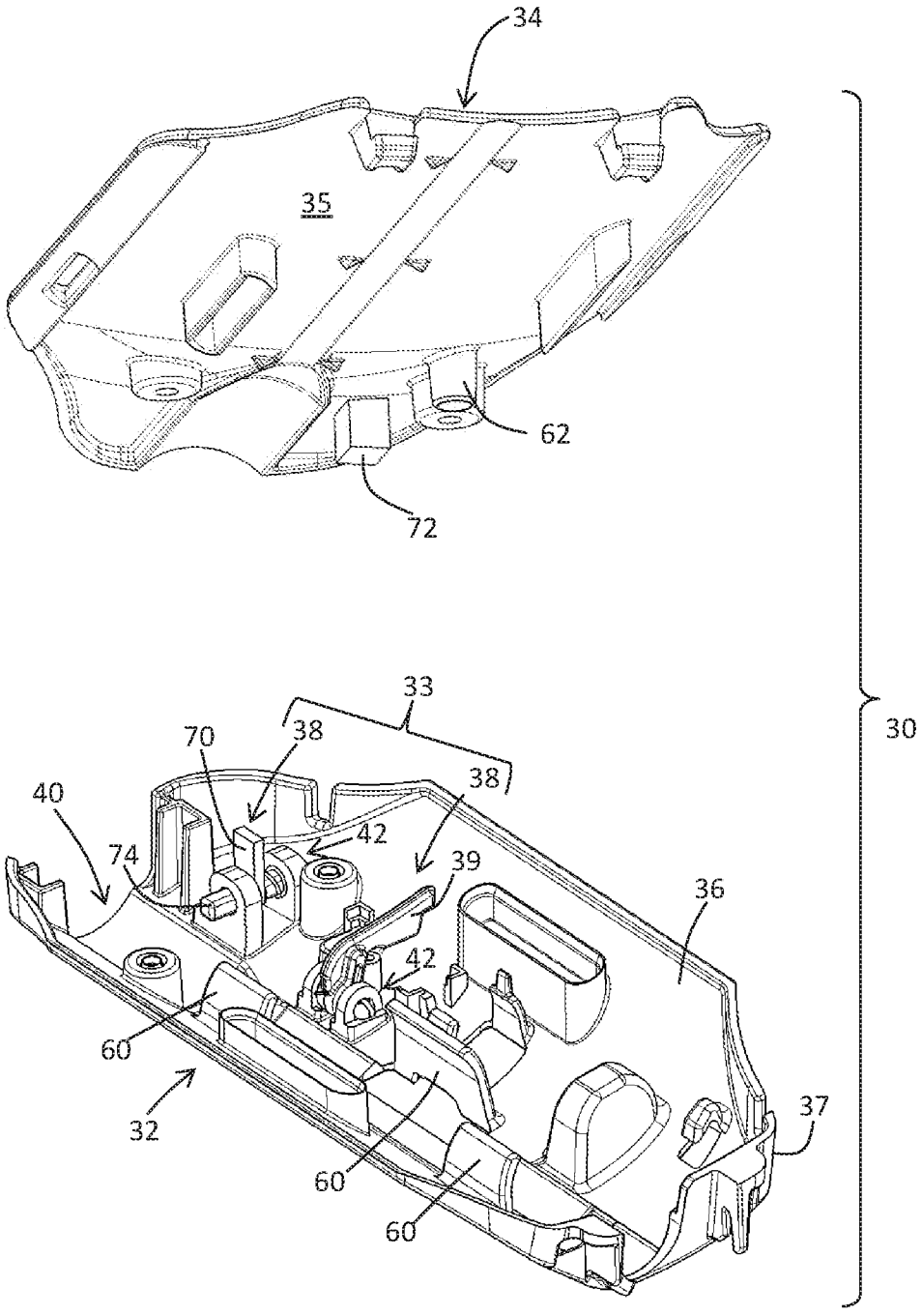


Fig. 14

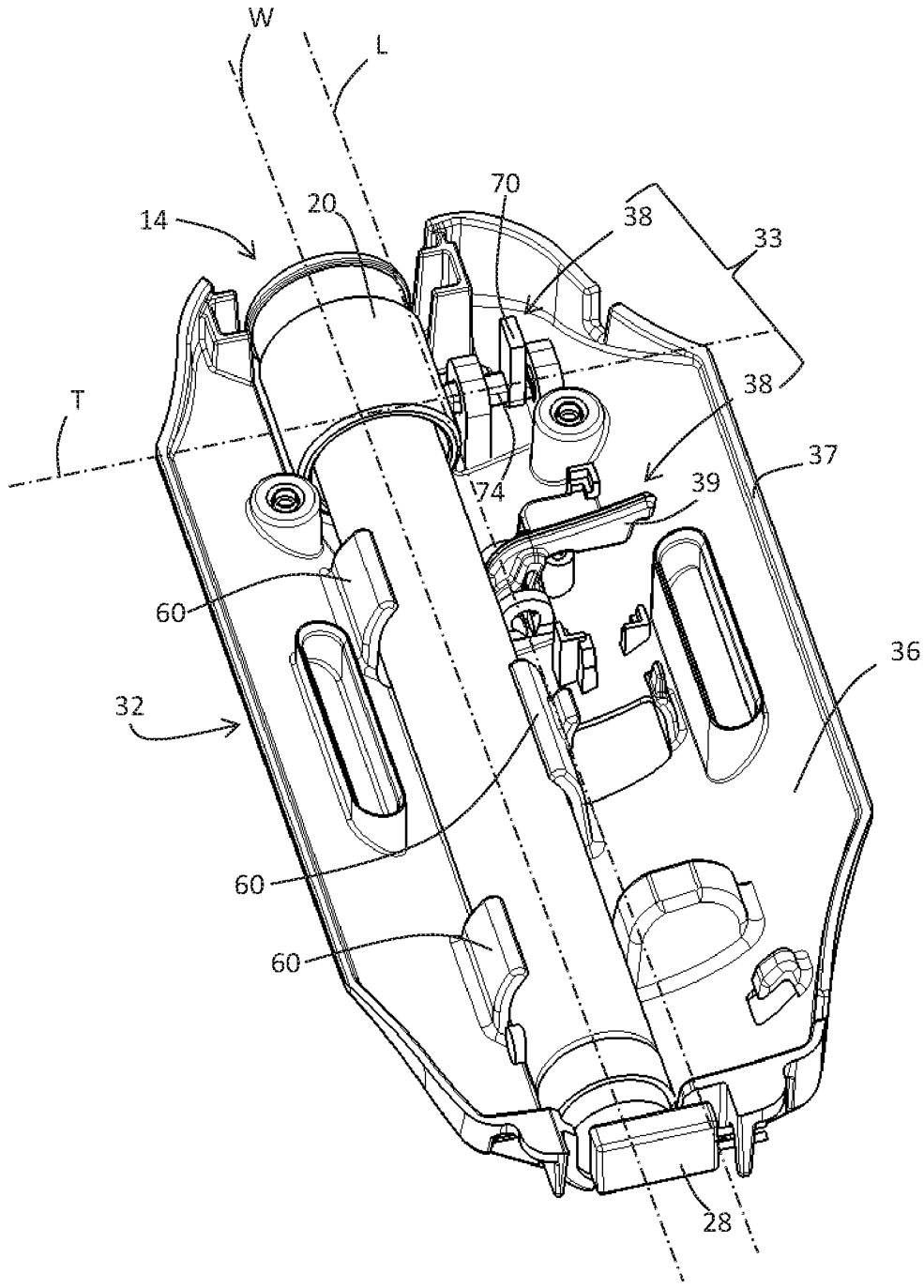


Fig. 15

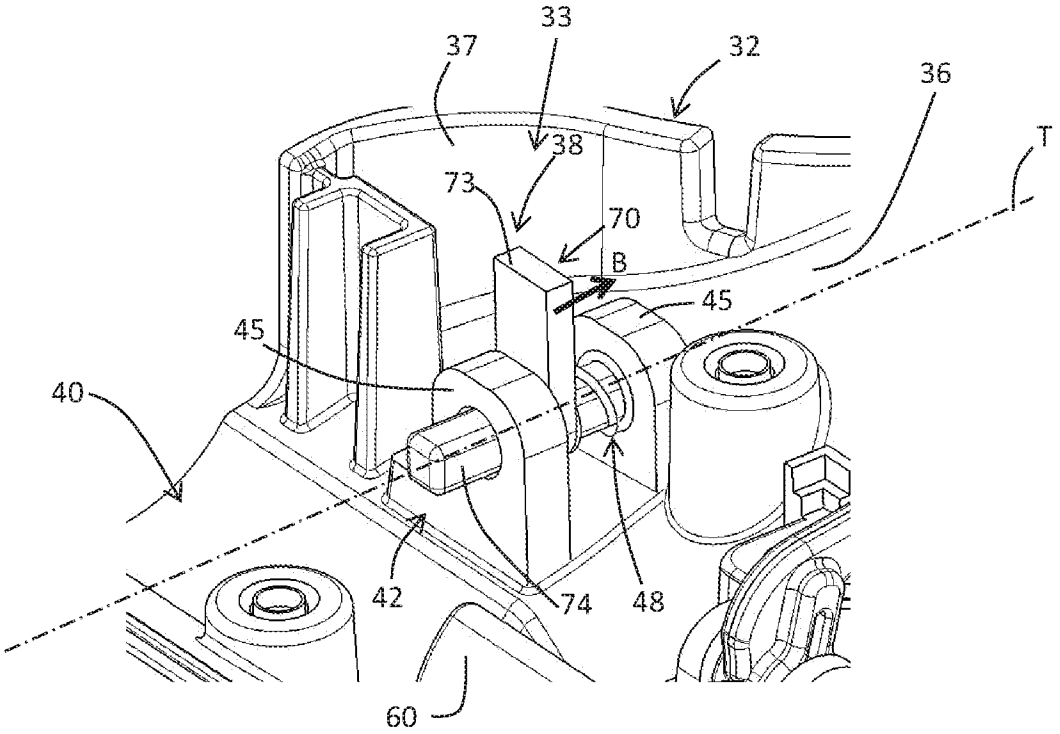
33
37
32
36
38
T
73
70
B
45
45
40
42
74
48
60

Fig. 16

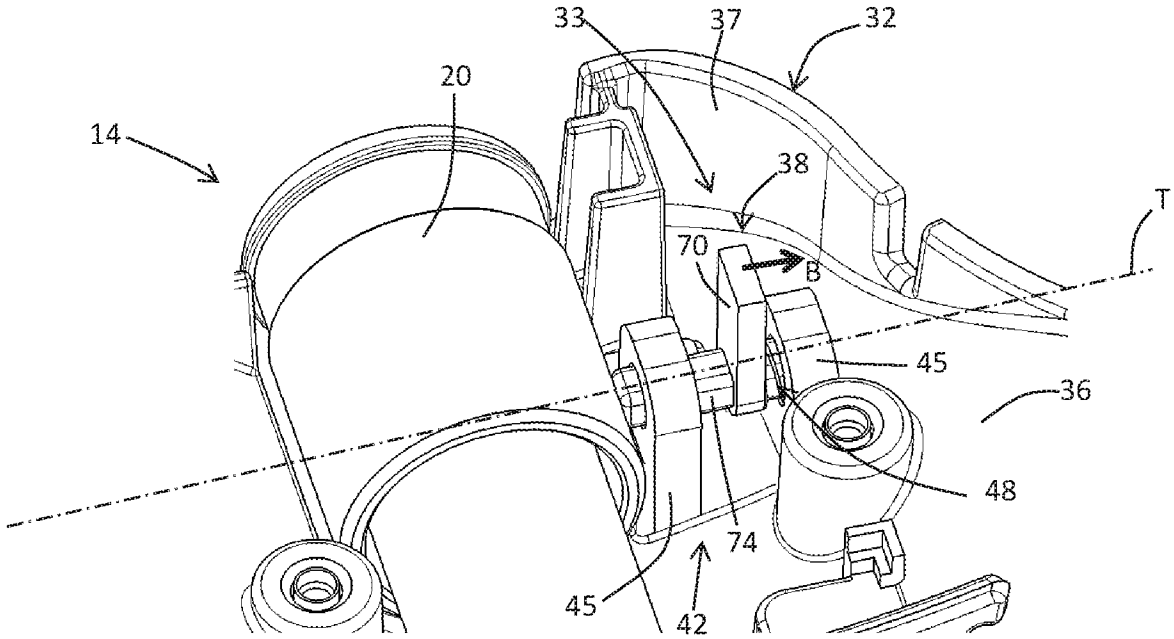
33
37
32
20
14
38
T
70
B
45
36
48
74
45
42

Fig. 17

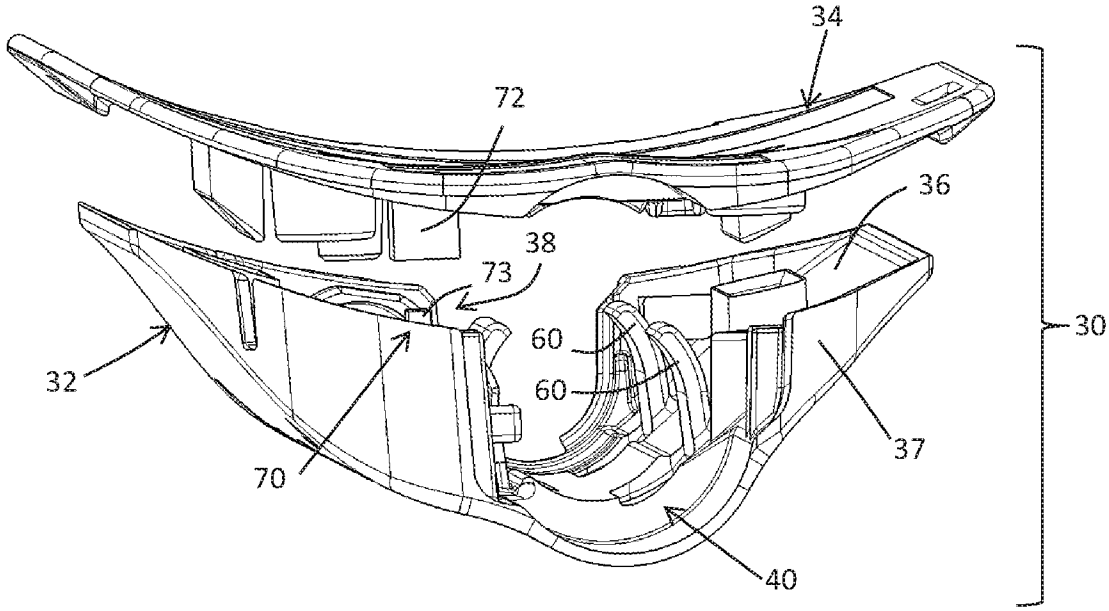


Fig. 18

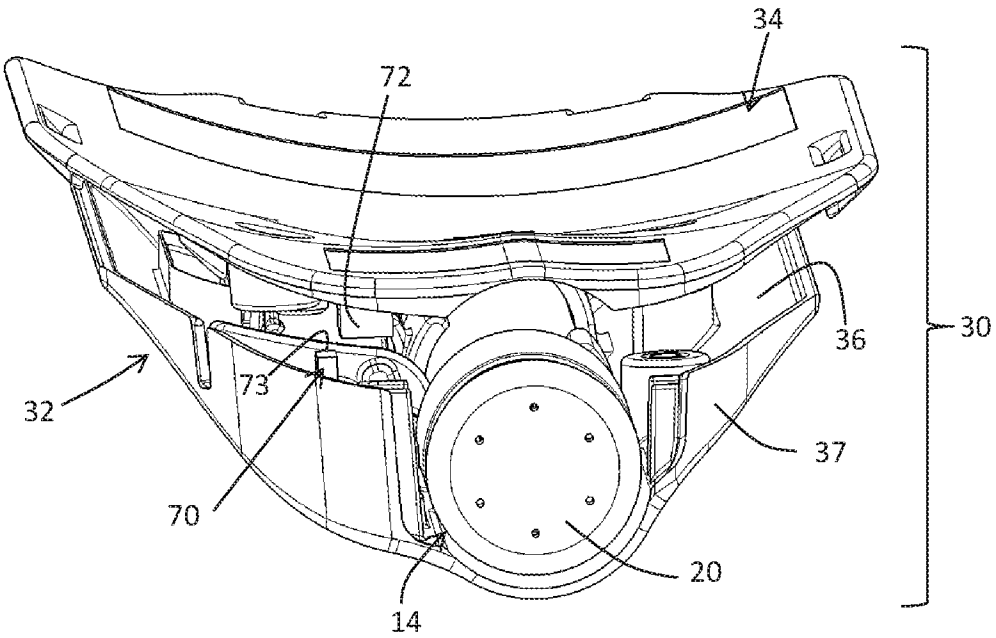


Fig. 19

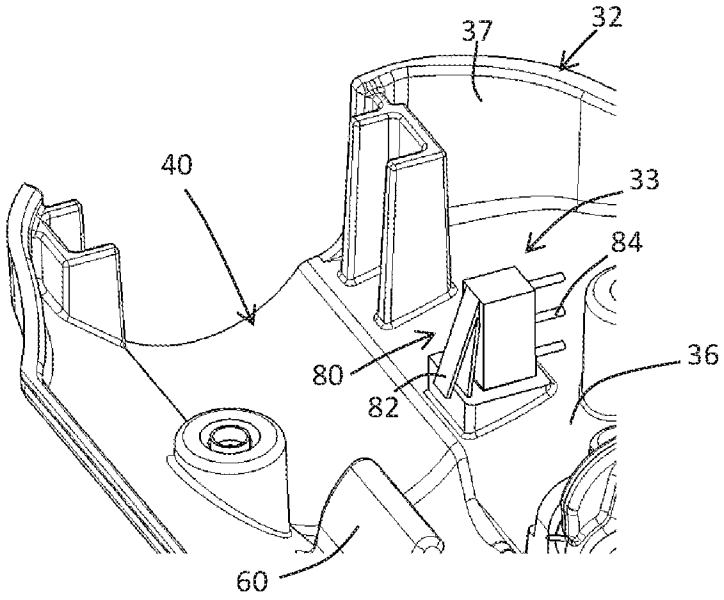


Fig. 20

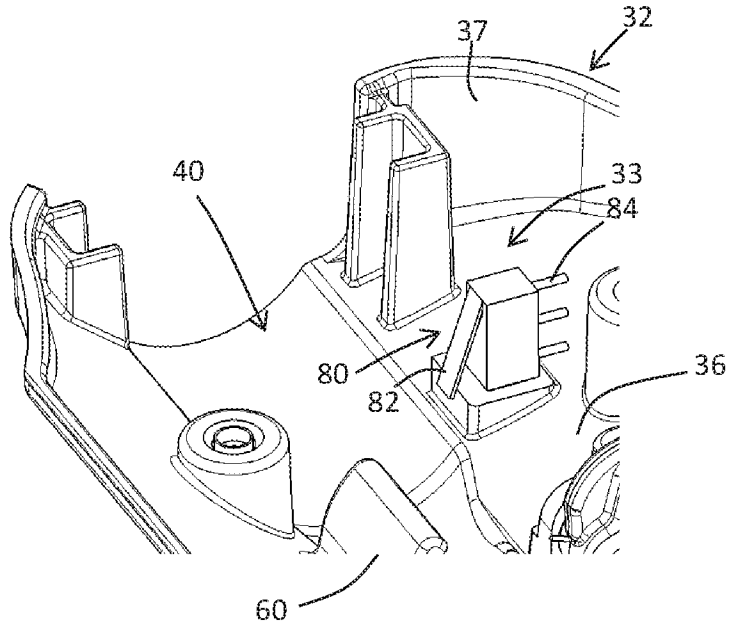


Fig. 21

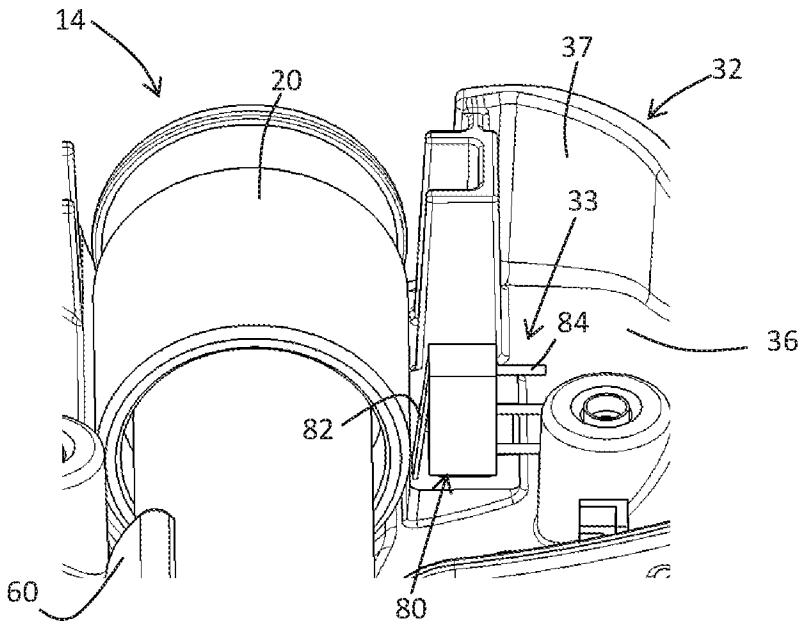


Fig. 22

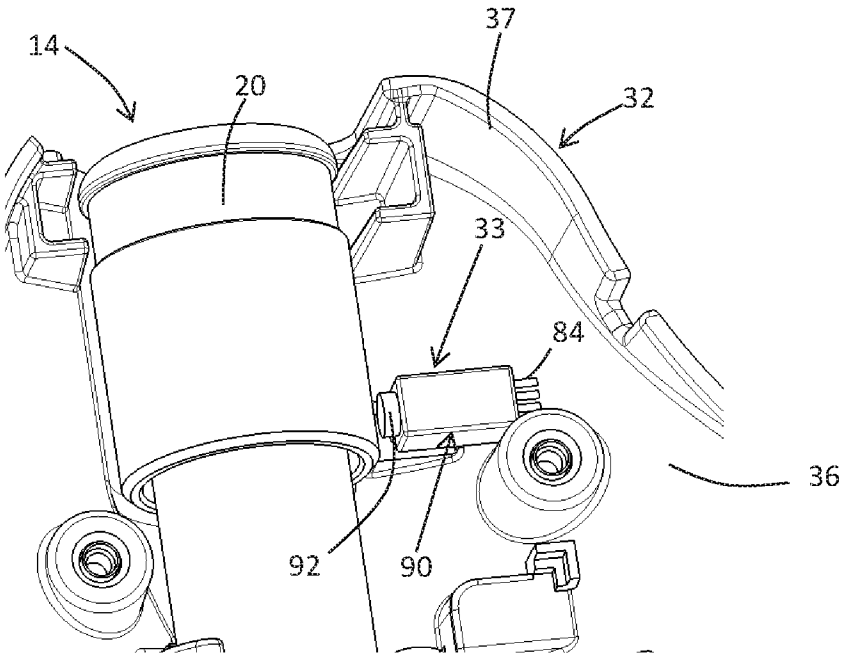


Fig. 23

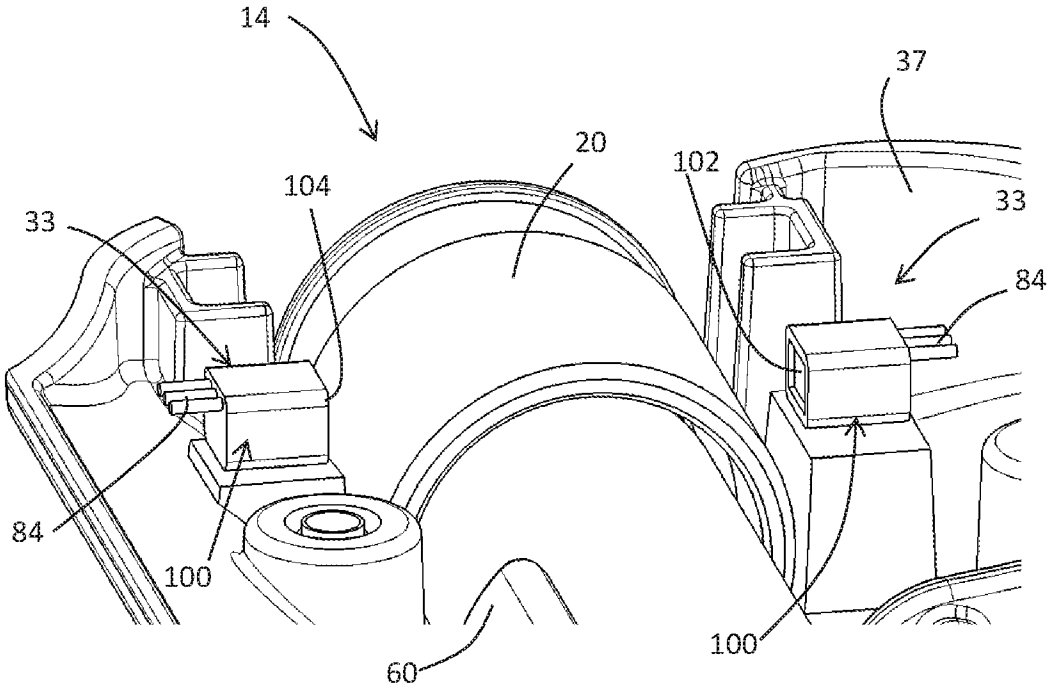


Fig. 24

# INTERNATIONAL SEARCH REPORT

International application No
PCT/IB2023/058797

A. CLASSIFICATION OF SUBJECT MATTER
INV. A41D13/018
ADD.

According to International Patent Classification (IPC) or to both national classification and IPC

B. FIELDS SEARCHED

Minimum documentation searched (classification system followed by classification symbols)
A41D F41A F41B

Documentation searched other than minimum documentation to the extent that such documents are included in the fields searched

Electronic data base consulted during the international search (name of data base and, where practicable, search terms used)
EPO-Internal, WPI Data

C. DOCUMENTS CONSIDERED TO BE RELEVANT

| Category* | Citation of document, with indication, where appropriate, of the relevant passages | Relevant to claim No. |
|---|---|---|
| X | WO 2021/089439 A1 (ALPINESTARS RES S P A [IT]) 14 May 2021 (2021-05-14) cited in the application page 10, line 9 - page 11, line 23; claims 1-19; figures 2-8 | 1-25 |
| A | US 5 458 364 A (MUELLER LOUIS A [US] ET AL) 17 October 1995 (1995-10-17) column 3, line 5 - column 5, line 5; claims 1-7; figures 1,2 | 1-25 |
| A | US 2014/057510 A1 (BEACH-DRUMMOND JAMES [US]) 27 February 2014 (2014-02-27) claims 1-10; figures 1,8 | 1-25 |

☐ Further documents are listed in the continuation of Box C.

☒ See patent family annex.

* Special categories of cited documents :

"A" document defining the general state of the art which is not considered to be of particular relevance

"E" earlier application or patent but published on or after the international filing date

"L" document which may throw doubts on priority claim(s) or which is cited to establish the publication date of another citation or other special reason (as specified)

"O" document referring to an oral disclosure, use, exhibition or other means

"P" document published prior to the international filing date but later than the priority date claimed

"T" later document published after the international filing date or priority date and not in conflict with the application but cited to understand the principle or theory underlying the invention

"X" document of particular relevance;; the claimed invention cannot be considered novel or cannot be considered to involve an inventive step when the document is taken alone

"Y" document of particular relevance;; the claimed invention cannot be considered to involve an inventive step when the document is combined with one or more other such documents, such combination being obvious to a person skilled in the art

"&" document member of the same patent family

| Date of the actual completion of the international search | Date of mailing of the international search report |
|---|---|
| 10 November 2023 | 14/12/2023 |

| Name and mailing address of the ISA/ | Authorized officer |
|---|---|
| European Patent Office, P.B. 5818 Patentlaan 2<br>NL - 2280 HV Rijswijk<br>Tel. (+31-70) 340-2040,<br>Fax: (+31-70) 340-3016 | Simpson, Estelle |

# INTERNATIONAL SEARCH REPORT

Information on patent family members

International application No
PCT/IB2023/058797

| Patent document cited in search report | Publication date | Patent family member(s) | Publication date |
|---|---|---|---|
| WO 2021089439 A1 | 14-05-2021 | CN 114980765 A | 30-08-2022 |
| | | EP 4054366 A1 | 14-09-2022 |
| | | IT 201900020298 A1 | 04-05-2021 |
| | | JP 2023502884 A | 26-01-2023 |
| | | KR 20220108065 A | 02-08-2022 |
| | | US 2022361599 A1 | 17-11-2022 |
| | | WO 2021089439 A1 | 14-05-2021 |
| US 5458364 A | 17-10-1995 | DE 69506966 T2 | 27-05-1999 |
| | | EP 0698532 A1 | 28-02-1996 |
| | | JP 3021769 U | 08-03-1996 |
| | | US 5458364 A | 17-10-1995 |
| US 2014057510 A1 | 27-02-2014 | AU 2013305704 A1 | 12-03-2015 |
| | | CA 2882627 A1 | 27-02-2014 |
| | | CA 2993554 A1 | 27-02-2014 |
| | | DK 2888161 T3 | 26-11-2018 |
| | | EP 2888161 A2 | 01-07-2015 |
| | | EP 3418179 A1 | 26-12-2018 |
| | | ES 2694684 T3 | 26-12-2018 |
| | | HK 1209707 A1 | 08-04-2016 |
| | | PT 2888161 T | 16-11-2018 |
| | | TR 201816548 T4 | 21-11-2018 |
| | | US 2014057510 A1 | 27-02-2014 |
| | | WO 2014031821 A2 | 27-02-2014 |