Nov. 7, 1944. J. DE SWART 2,362,120

COSMETIC CASE

Filed Jan. 31, 1944

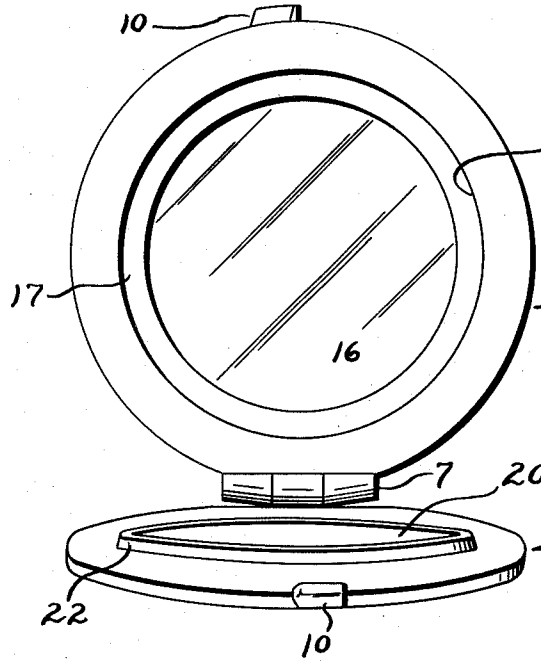

Fig. 1

Fig. 2

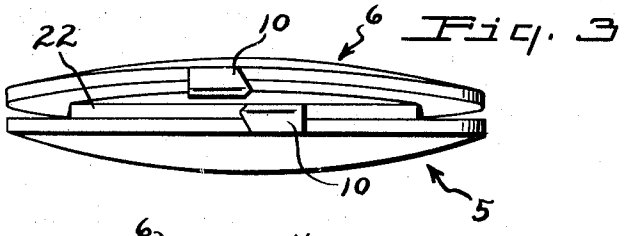

Fig. 3

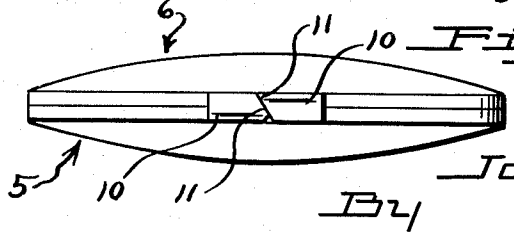

Fig. 4

Inventor
Jan de Swart
By
Atty.

Patented Nov. 7, 1944

2,362,120

UNITED STATES PATENT OFFICE

2,362,120

COSMETIC CASE

Jan de Swart, Los Angeles, Calif., assignor of one-half to C. Bland Jamison, Beverly Hills, Calif.

Application January 31, 1944, Serial No. 520,474

3 Claims. (Cl. 220—55)

This invention relates to containers and has more particularly to do with cosmetic cases such as are commonly known as vanity cases, although the invention is not confined to such limited use.

It is an object to provide a container which embodies novel and efficient means for maintaining it in closed position regardless of the wear on the latch member and in which the inter-engagement of and disengagement of the latch members does not tend to spring the hinge.

Another object is the provision of a case embodying means for effectively sealing the contents from undue exposure to atmosphere when closed.

My invention possesses still further advantages and how those as well as the objects and advantages hereinabove pointed out are attained will be best understood from the following description of a presently preferred embodiment, for which purpose I shall refer to the accompanying drawing, in which:

Fig. 1 is a perspective showing the case in open position;

Fig. 2 is a medial cross section showing the case in open position;

Fig. 3 is a front elevation showing the case partially closed; and

Fig. 4 is a front elevation showing the case closed.

In the drawing, my container is shown as consisting of a base element 5 and a lid element 6, of round plan and hingedly connected together by a hinge member 7 to be swingable relative to each other.

For releasably latching or holding together the base and lid elements, I provide on the peripheral edge of each, at a point opposite the hinge, a lug 10, the interengaging end portions 11 of the lugs being beveled from both top and bottom to present a somewhat V point. When in the closed position the end 11 of the lug carried by the lid slightly underlies the end 11 of the other lug. This very slight interengagement of the lugs is rendered sufficient by the construction presently to be described. Moreover, the lugs may be of substantially strong section and therefore extremely durable in that it is not essential that they flex during opening and closing as will hereinafter appear.

The lid interior is provided with a circular recess 15 within which a mirror 16 is mounted and retained by flange 17.

The base 5 has a circular recess 20 suitable for holding cosmetics or the like, the base presenting a circular flange 22 which is adapted to fit rather snugly in the recess 15 when the case is closed. The side wall of the recess 15 flares outwardly and the outer surface of the flange 22 is beveled to conform to and wedge against the side wall of the recess, so that when the device is fully closed the flange becomes wedged in the recess 15 and thus it is by such cooperation of the flange and recess side wall that the latch lugs are retained in latching position despite the very slight interengagement. However, the flange 22 is sufficiently thin and resilient to permit the lugs to be moved longitudinally apart sufficiently to swing the lid relative to the base for enough that the relatively larger diameter portion of the recess side wall encompasses the relatively smaller diameter portion of the flange 22 to permit the lugs to be further moved longitudinally away from each other to be completely engaged, without, however, preventing any undue stress on the hinge.

The construction which I have described is particularly adaptable for cases made of plastics, particularly the more brittle plastics, because in conventional cases made of relatively brittle plastics, if the latch lugs are made of strong enough section to be sufficiently durable to withstand hard usage, their engagement and disengagement places such a stress on the hinge as to cause breakage and warping.

While, in the foregoing, I have resorted to considerable detail of structure and association of parts in describing a particular example of my invention, I wish it to be understood that I have done so merely to make my invention understood and that I do not limit my invention to such details. On the contrary, my invention is only to be limited as appears in the appended claims.

I claim:

1. In a case of the class described, a base element and a lid element, means hingedly connecting together the peripheral edges of the elements for swinging movement relative to each other, a recess in the inner surface of one of the elements presenting a circular side wall, a circular flange carried by the other element and adapted to fit in the recess and circumferentially engage the side wall thereof, and means for yieldably latching the elements together at a point opposite the hinge, including a pair of radially disposed peripheral lugs carried one by each of the respective elements, each of said lugs having an end portion interengageable with the other lug.

2. In a case of the class described, a base element and a lid element, means hingedly connecting together the peripheral edges of the elements for swinging movement relative to each other, an outwardly flared recess in the inner surface of one of the elements presenting a circular side wall, a circular flange carried by the other element and adapted to fit in the recess and circumferentially engage the side wall thereof, said flange having an outer surface beveled to conform to and engage the recess side wall with a wedge fit, and means for yieldably latching the elements together at a point opposite the hinge, including a pair of radially disposed peripheral lugs carried one by each of the respective elements, each of said lugs having an end portion interengageable with the other lug.

3. In a case of the class described, a base element and a lid element, means hingedly connecting together the peripheral edges of the elements for swinging movement relative to each other, an outwardly flared recess in the inner surface of one of the elements presenting a circular side wall, a resilient circular flange carried by the other element and adapted to fit in the recess and circumferentially engage the side wall thereof, said flange having an outer surface beveled to conform to and engage the recess side wall with a wedge fit, and means for yieldably latching the elements together at a point opposite the hinge, including a pair of radially disposed interengaging peripheral lugs on the respective elements at a point opposite the hinge, one of the lugs having an end portion underlying the adjacent end portion of the other lug, when the case is in closed position, to an extent whereby to be completely disengageable therefrom only after the larger diameter portion of the recess side wall of the lid element has been moved into position encircling the smaller diameter portion of the flange of the base element.

JAN de SWART.