May 25, 1943. F. KILLAIRE 2,319,868

CONTROL UNIT

Filed Feb. 24, 1941

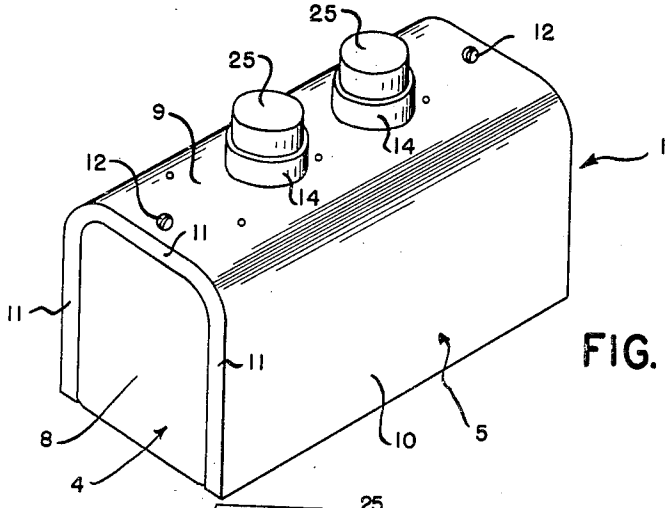

FIG. 1.

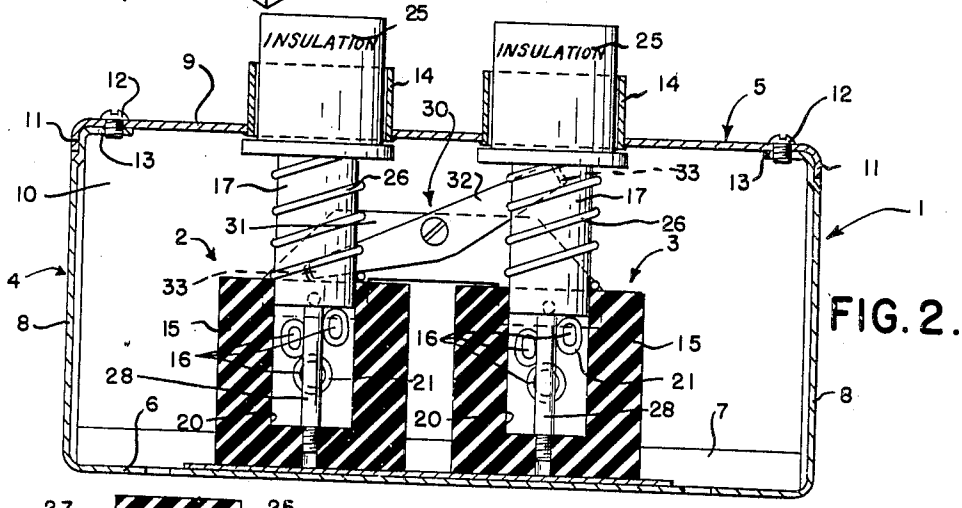

FIG. 2.

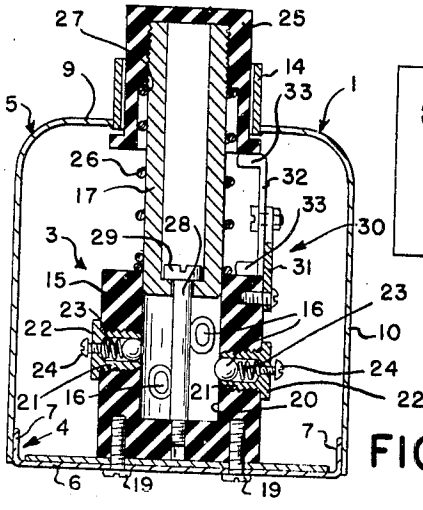

FIG. 3.

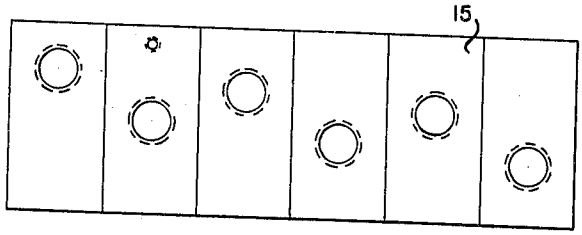

FIG. 4.

INVENTOR.
FREDERICK KILLAIRE
BY Williamson Hubbard & Belknap.
ATTORNEYS

Patented May 25, 1943

2,319,868

UNITED STATES PATENT OFFICE

2,319,868

CONTROL UNIT

Frederick Killaire, Windsor, Ontario, Canada, assignor to Northern Engineering Works, Detroit, Mich., a corporation of Michigan

Application February 24, 1941, Serial No. 383,486

5 Claims. (Cl. 200—16)

The invention relates to control units and refers more particularly to electrical progressive control units for pilot circuits only.

The invention has for one of its objects to provide a compact construction of control unit which is relatively small and of relatively light weight.

The invention has for another object to provide a progressive control unit so constructed that resistances which can be noticed by the operator are interposed to the relative movement of the parts to successively close the electrical circuits.

The invention has for further objects to provide an improved construction of push button and to provide an improved safety device for controlling the operation of a pair of associated push buttons.

With these as well as other objects in view, the invention resides in the novel features of construction and combinations and arrangements of parts as more fully hereinafter set forth.

In the drawing:

Figure 1 is a perspective view of a control unit embodying the invention;

Figure 2 is a vertical section through the axes of the push buttons;

Figure 3 is a vertical section at right angles to Figure 2 and through the axis of one of the push buttons;

Figure 4 is a developed elevation showing the positions of the contact members carried by a body of one of the push buttons.

While the control unit may have various uses, it is particularly applicable to cranes and hoists to control the operation of their electric motors. More specifically, the control unit is an electrical progressive control unit for pilot circuits only which upon being closed operate magnetic switches in the electric motor circuits.

While the control unit is adapted to control the operation of one electric motor, or a plurality of electric motors, it is illustrated as adapted to control the operation of a single electric motor. The control unit comprises the casing 1 and the two push button switches 2 and 3, which latter would be duplicated for each extra electric motor to be included. The casing is formed of the bottom and top sections 4 and 5, respectively, the former having the base 6 with the integral upstanding side flanges 7 and the integral upstanding ends 8. The top section has the top 9 and the integral downwardly extending sides 10 with integral inturned flanges 11 at the ends of the top and sides. The top section is adapted to embrace the bottom section with the sides 10 overlapping the flanges 7 and the inturned flanges 11 overlapping the ends 8. The top section is adapted to be secured to the bottom section by the screws 12 which extend through the top 9 and are threaded into the ears 13 formed on the ends 8. To provide access to the push button switches, the top 9 is formed with two openings registering with the caps or push buttons of the push button switches and two upstanding collars 14 are secured to the edges of the openings.

The two push button switches are alike, each comprising the insulator body 15 carrying the contact members 16, the contact member 17 movable into engagement with the contact members 16, and the insulator cap or push button 25 upon the contact member 17.

Each insulator body 15 is secured at its inner or lower end to the base 6 by suitable means, such as the screws 18. As shown, each insulator body is hexagonal and has the central longitudinally extending cylindrical recess 20 leading from its outer or upper end to near its inner or lower end. Threaded into each side of the insulator body is a retainer 21 having a polygonal head 22 outside the insulator body for engagement by a suitable wrench. The retainer extends to the recess 20 and is hollow to receive a contact member 16 and a coil spring 23 for urging the contact member toward the recess to normally project inwardly beyond the wall of the recess. The contact member 16 is preferably a steel ball held from disengagement from the retainer by turning in its inner end to a diameter smaller than the ball. The retainer is preferably formed of brass and has the screw 24 threaded therein for clamping a wire to the retainer.

The contact member 17 is a hollow cylindrical plunger preferably formed of steel and slidable within the recess 20. An insulator cap or push button 25 is threaded on the outer or upper end of the plunger and a coil spring 26 encircling the plunger and abutting the insulator body 15 and the annular shoulder 27 in the cap or push button normally holds the plunger in its outermost or fully raised position, at which time it preferably clears all the contact members 16. The fully raised position is controlled by the retaining screw 28 threaded into the bottom of the recess 20 and extending through the inner or lower end of the plunger and having a head 29 within the plunger and adapted to abut its inner or lower end.

Inasmuch as the progressive control unit is for pilot circuits only, which require but very little current ordinarily not in excess of two or three

amperes, the contact members may be formed of steel so that they will have a long life without appreciable wear. The life is also increased by reason of the reciprocable contact member being revoluble. In use, it is apparent that the springs for urging the ball contacts toward the recess in the insulator body must be able to carry the current since the ball contacts when pressed outwardly by the reciprocable contact member might clear their retainers.

As shown in the present instance, there are six ball contacts for each push buttton switch providing five electric circuits in each of which the outermost or uppermost ball contact forms a part. As shown particularly in Figure 4, the six ball contacts are longitudinally and angularly spaced of the insulator body and arranged in an upper and a lower series of three ball contacts each with the ball contacts of either series angularly spaced with respect to the ball contacts of the other series. With this arrangement electrical clearance with minimum stroke of the reciprocable contact member and a relatively large number of ball contacts is obtained. It is to be noted that one push button switch controls the electric current for driving the electric motor in one direction, while the other push button switch controls the electric current for driving the electric motor in the reverse direction.

30 is a safety device for the control unit comprising the bar 31 which is secured at its ends to the insulator bodies of the push button switches and the bar 32 which is pivotally mounted at its middle upon the middle of the bar 31 in a zone above the insulator bodies. The bar 32 has the transverse end portions 33 which are adapted to be abutted by the insulator caps 25 when moved inwardly or lowered. The construction of the safety device is such that if one of the reciprocable plunger contact members is moved inwardly or lowered and sticks it will be positively moved outwardly or raised when the other reciprocable plunger contact member is moved inwardly or lowered.

The construction is such that the control unit is relatively small and of relatively light weight so that when suspended from a crane or hoist, for example, by a cable it may be readily grasped and operated by one hand of the operator permitting the operator to use his other hand in guiding the work. The construction is also such that the operator can readily feel the progressive making of the pilot circuits.

What I claim as my invention is:

1. In a progressive control unit, an insulator body having a recess, contact members carried by said body and extending into the recess at different zones longitudinally and angularly of the recess, a hollow plunger contact member movable longitudinally within the recess progressively into engagement with said first mentioned contact members, said plunger contact member having a transverse wall at its lower end, an insulator cap upon the outer end of said plunger contact member, a coil spring encircling said plunger contact member and abutting said body and cap for normally urging said plunger contact member to its outermost position, and a retaining screw threaded into the bottom of the recess and having a head extending within said plunger contact member for limiting the outward movement of said plunger contact member.

2. In a progressive control unit, a plurality of insulator bodies having substantially parallel recesses, contact members carried by each of said bodies extending into the recesses at different zones longitudinally and angularly of the recesses, contact members movable longitudinally within the recesses in an inward direction to successively engage said first mentioned contact members, insulator caps at the outer ends of said longitudinally movable contact members, a bar extending between said insulator bodies and secured thereto, and a safety member pivotally mounted on said bar and having portions engageable with said caps to thereby cause movement of one of said longitudinally movable contact members in an outward direction when the other of said longitudinally movable contact members is moved in an inward direction.

3. In a progressive control unit, a body having a recess, contact members carried by said body in insulated relation to each other and extending into the recess at different zones longitudinally and angularly of the recess, a hollow plunger contact member movable longitudinally within the recess progressively into engagement with said first mentioned contact members, said plunger contact member having a transverse shoulder at its inner side, an insulator cap upon the outer end of said plunger contact member, a coil spring encircling said plunger contact member and abutting said body and cap for normally urging said plunger contact member to its outermost position, and a retaining member secured to said body and having a shouldered portion extending within said plunger contact member and engageable with said transverse shoulder for limiting the outward movement of said plunger contact member.

4. In a progressive control unit, a body having a recess, an electrical conducting member movable longitudinally within the recess, contact members carried in insulated relation to each other by said body, said contact members being spaced longitudinally and angularly of said body and extending into the recess for progressive engagement by said electrical conducting member, said contact members being arranged in a pair of series occupying different zones longitudinally of said body with the contact members of one series between the contact members of the other series angularly of said body.

5. In a progressive control unit, telescoping members relatively movable longitudinally of each other, one of said telescoping members forming an electrical conductor, contact members carried in insulated relation to each other by the other of said telescoping members, said contact members being spaced longitudinally and angularly of said last mentioned telescoping member for progressive engagement by said first mentioned telescoping member, said contact members being arranged in a plurality of series occupying different zones longitudinally of said last mentioned telescoping member with the contact members of one series between the contact members of an adjacent series angularly of said last mentioned telescoping member.

FREDERICK KILLAIRE.