(No Model.)

A. ROLLASON & J. H. HAMILTON.

GAS OR VAPOR ENGINE.

No. 456,505. Patented July 21, 1891.

Fig. 1.

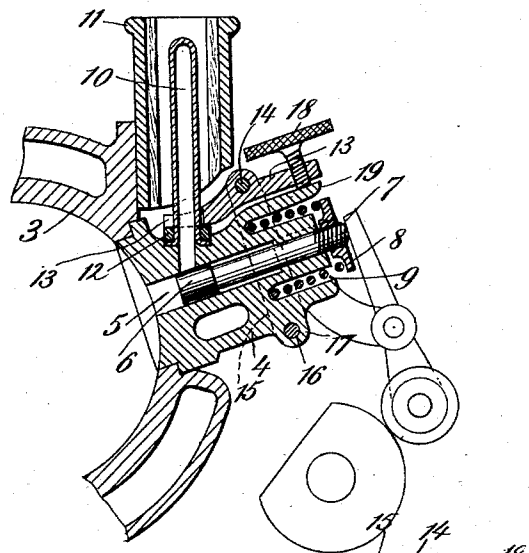

Fig. 2.

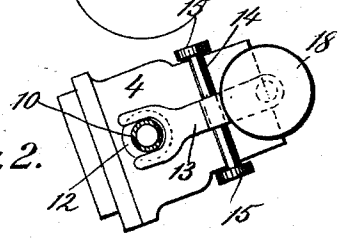

Attest:
F. H. Schott
R. J. Pratt,

Inventors
Arthur Rollason,
John Henry Hamilton
by Lemmie & Goldsborough,
Attys.

THE NORRIS PETERS CO., PHOTO-LITHO., WASHINGTON, D. C.

UNITED STATES PATENT OFFICE.

ARTHUR ROLLASON AND JOHN HENRY HAMILTON, OF SANDIACRE, ENGLAND.

GAS OR VAPOR ENGINE.

SPECIFICATION forming part of Letters Patent No. 456,505, dated July 21, 1891.

Application filed March 26, 1891. Serial No. 386,532. (No model.) Patented in England October 18, 1889, No. 16,434.

To all whom it may concern:

Be it known that we, ARTHUR ROLLASON and JOHN HENRY HAMILTON, British subjects, residing at Sandiacre, in the county of Derbyshire, England, have invented certain new and useful Improvements in Gas or Vapor Engines, (patented in Great Britain under date of October 18, 1889, No. 16,434;) and we do hereby declare the following to be a full, clear, and exact description of the invention, such as will enable others skilled in the art to which it appertains to make and use the same.

In an application for Letters Patent of the United States, filed of even date herewith, Serial No. 386,530, we have shown and described an ignition-chamber opening into the combustion-chamber of a gas or vapor engine and operated by a cam-shaft driven from the crank-shaft of the engine, so as to receive and ignite a portion of the compressed charge in the combustion-chamber, thereby effecting the explosion of said compressed charge. The present application relates to a modification of the construction of the ignition-chamber shown in said application, so as to permit the ignition to take place by means of an externally-heated tube, the plunger or piston which governs the entrance of the igniting portion of the charge into the externally-heated tube making a complete outward stroke at each ignition, and the heated tube itself being capable of easy removal and replacement, as will be hereinafter more particularly described.

In the accompanying drawings, illustrative of the invention, Figure 1 represents a sectional view of the same as applied to the combustion-chamber of a gas or vapor engine. Fig. 2 represents a detached top plan view of the ignition-chamber, the heated tube being shown in section.

Similar numerals of reference indicate similar parts in both views.

Referring to the drawings, 3 indicates, partly broken away, the combustion-chamber of a gas or vapor engine, which may be of the three-cycle type shown in Letters Patent granted to Arthur Rollason, No. 391,338, dated October 16, 1888, or which may be of any other type of gas or vapor engine wherein the explosive mixture is adapted to be compressed in the combustion-chamber.

4 indicates the main body portion of the ignition-chamber, provided with a central passage-way 5, opening into the interior of the combustion-chamber, and provided with a piston-valve 6, whose stem 7 receives at its outer end a disk or collar 8, against which presses a spring 9, located between the body portion of the ignition-chamber and the disk 8 and tending to force the piston-valve outwardly.

It will be understood that the inward movement of the piston-valve is effected from a cam-shaft or lay-shaft driven by the crank-shaft of the engine—as, for instance, in the manner illustrated in the aforesaid application—the lay-shaft cam, however, being of such form as to permit the piston-valve to make a complete outward stroke without the pause described in one of the modifications shown in said application.

In Fig. 1 the piston-valve is shown as at the limit of its inward stroke.

At the limit of the outward stroke of the piston-valve 6 communication is established between the passage-way 5 and the tube 10, located within the flue 11, said flue containing a gas-flame or the like for heating the tube externally. In order to effect the easy removal and replacement of the tube 10, (which is at times rendered necessary by the destructive effect of oxidation upon it,) a simple and easily-manipulated arrangement is employed for securing the tube removably in place. To this end a collar or flange 12 is formed upon the open end of the tube, preferably by upsetting said open end and slipping a collar on over the other end, as shown in Fig. 1. On the back of this flange or collar the forked end of a lever 13 is caused to bear, said lever being centered to rock upon a pin 14, connecting two swinging links 15, pivoted by a pin 16 to a projection or lug 17 on the main body of the ignition-chamber. A set-screw 18 passes through a threaded opening in the outer end of the lever 13 and bears against a projection 19 of the ignition-chamber, so that by screwing up the screw 18 the pressure of

the yoke upon the flange or collar 12 may be regulated.

In order to replace a tube, the set-screw 18 is slacked off and the lever 13 and links 15 pulled back, thereby leaving the tube free to be lifted out, whereupon another may be dropped in and the lever and links pushed back in place and the screw 18 once more screwed down. It is evident that this arrangement or its equivalent may be used in connection with any other system of tube-ignition.

The mode of operation of the ignition-chamber for effecting the explosion of a compressed charge within the combustion-chamber of a gas or vapor engine will be readily understood. Thus, when the cam-shaft or lay-shaft or its equivalent permits, the expansive force of the compressed charge, assisted by the spring 9, will force the piston-valve 6 outwardly until communication is established between the passage 5 and the externally-heated tube 10, whereupon a portion of the explosive mixture from the explosion-cylinder of the gas or vapor engine will pass into the tube 10 and be ignited therein, thereby exploding the main charge. The subsequent return or inward movement of the piston will be effected from the cam-shaft or its equivalent in opposition to the spring 9, and so as to cut off communication between the passage-way 5 and the heated tube 10 at all times, except when the explosive mixture is compressed and ready to be ignited.

As the spring 9 is employed merely to assist the expansive force of the charge acting upon the piston-valve, said spring may be dispensed with where such expansive force of the charge is sufficient to actuate the piston-valve. Nevertheless it is preferred to employ the spring in order to insure prompt and smooth action of the parts.

Having thus described the invention, what we claim is—

1. In a gas or vapor engine, the combination, with the ignition-chamber, of a heating-flue located above the same, an ignition-tube located within the heating-flue and seated directly upon the ignition-chamber, and a tube securing or retaining device for fixing the tube to its seat, said device being releasable from the outside of the heating-flue, whereby the tube may be readily removed from its seat and replaced, substantially as described.

2. In a gas or vapor engine, the combination, with the ignition-chamber, of a removable ignition-tube and a releasable retaining-lever holding the tube to its seat, substantially as described.

3. In a gas or vapor engine, the combination, with the ignition-chamber, of a removable ignition-tube, a pivoted retaining-lever therefor, and a releasable pressure-screw for applying the lever to the tube, so as to hold the latter to its seat or so as to release the lever from the tube, substantially as described.

4. In a gas or vapor engine, the combination, with the ignition-chamber, of a removable ignition-tube, a pivoted retaining-lever, a swinging frame within which said lever is mounted, and a releasable pressure-screw for applying the lever to the tube, so as to hold the latter to its seat or so as to release the lever from the tube, substantially as described.

5. In a gas or vapor engine, the combination, with the ignition-chamber, of a removable ignition-tube provided with flange projections, a pivoted retaining-lever having a forked end bearing on said flange projections, a swinging frame within which said lever is mounted, and a releasable pressure-screw for applying the lever to the tube, so as to hold the latter to its seat or so as to release the lever from the tube, substantially as described.

6. In a gas or vapor engine, the combination, with the ignition-chamber, of a removable ignition-tube expanded or upset at its open end, a collar fitting against said expanded end, and a releasable retaining device bearing upon said collar, substantially as described.

7. In a gas or vapor engine, the combination, with the ignition-chamber, of a removable ignition-tube, a pivoted retaining-lever, a swinging frame within which said lever is mounted, said frame being pivoted to the ignition-chamber and encircling the same, and a releasable pressure-screw passing through a screw-threaded opening in the pivoted lever and bearing upon the ignition-chamber, substantially as described.

In testimony whereof we affix our signatures in presence of two witnesses.

ARTHUR ROLLASON.
JOHN HENRY HAMILTON.

Witnesses:
JOSEPH GEORGE NADEN,
GEORGE EDWARD BORWICK.