METHOD AND APPARATUS FOR DRESSING GRINDING WHEELS

Filed Jan. 16, 1969 3 Sheets-Sheet 1

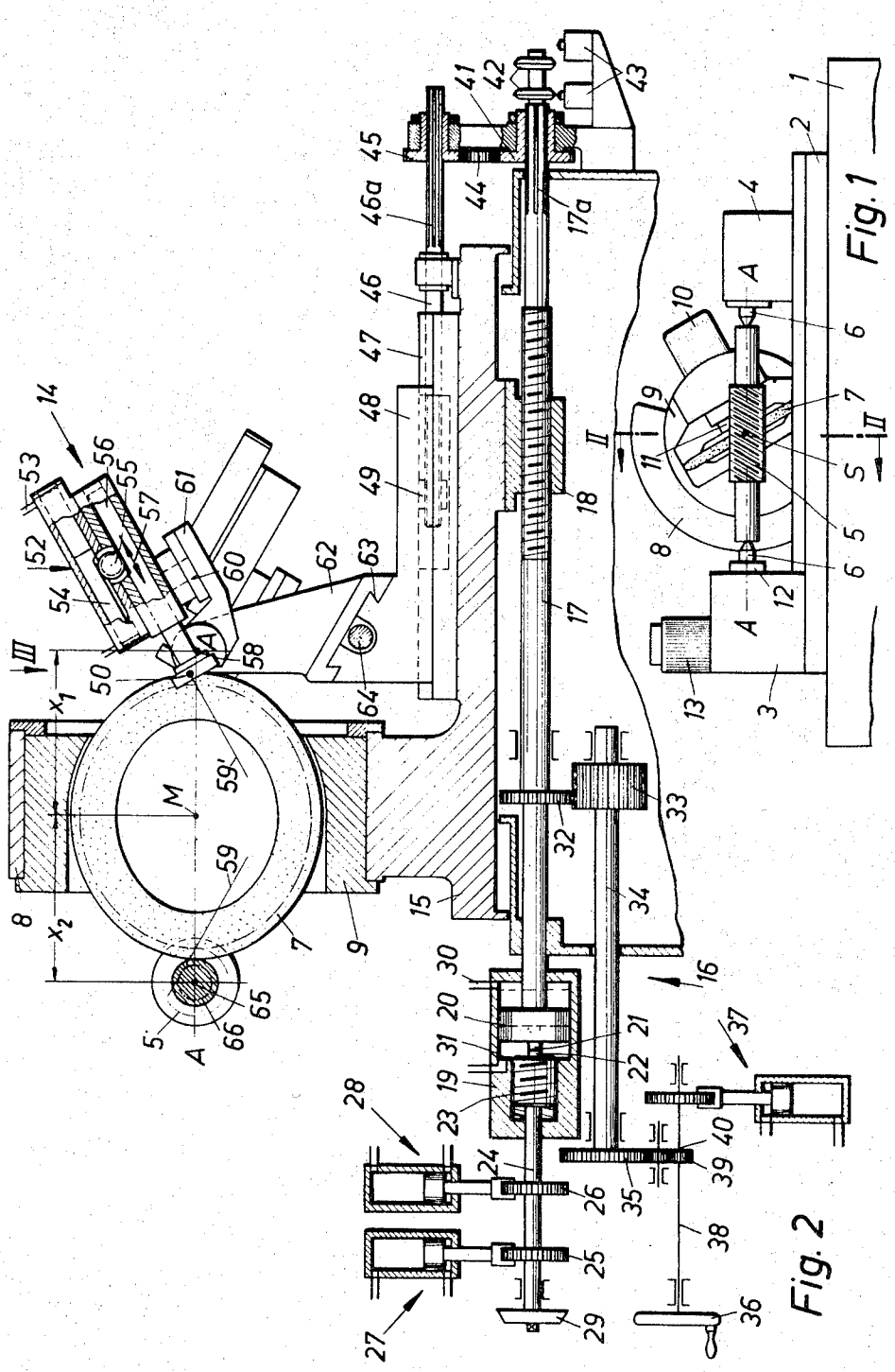

Fig. 1

Fig. 2

Inventor:
GERHARD STADE

BY McGlew and Toren
ATTORNEYS

METHOD AND APPARATUS FOR DRESSING GRINDING WHEELS

Filed Jan. 16, 1969 3 Sheets-Sheet 2

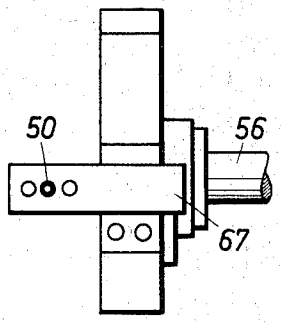

Fig. 5

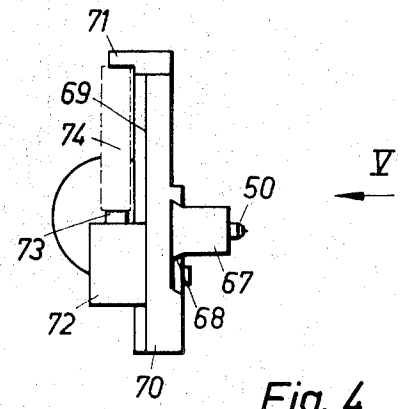

Fig. 4

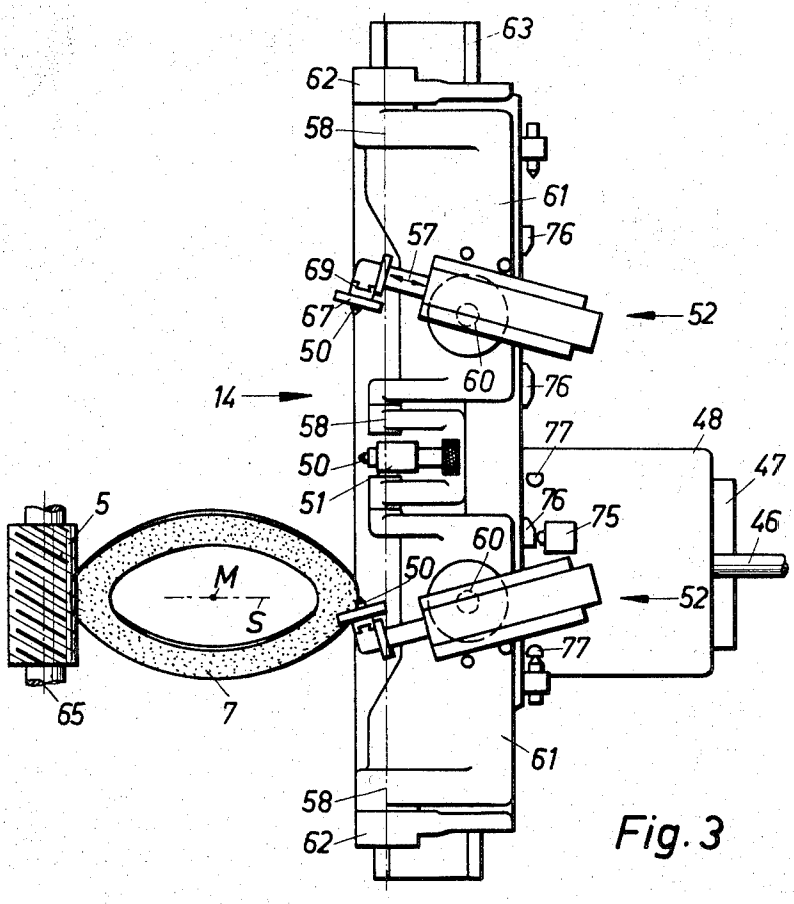

Fig. 3

Inventor:
GERHARD STADE

BY McGlew and Toren
ATTORNEYS

METHOD AND APPARATUS FOR DRESSING GRINDING WHEELS

Filed Jan. 16, 1969 3 Sheets-Sheet 3

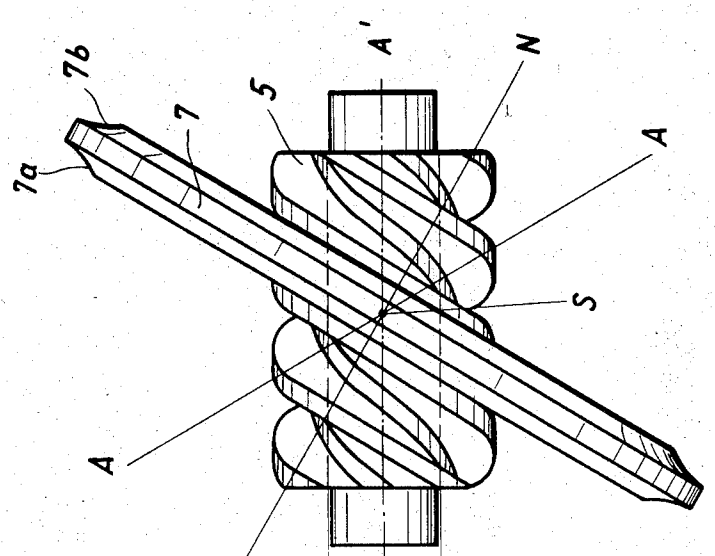

Fig. 7

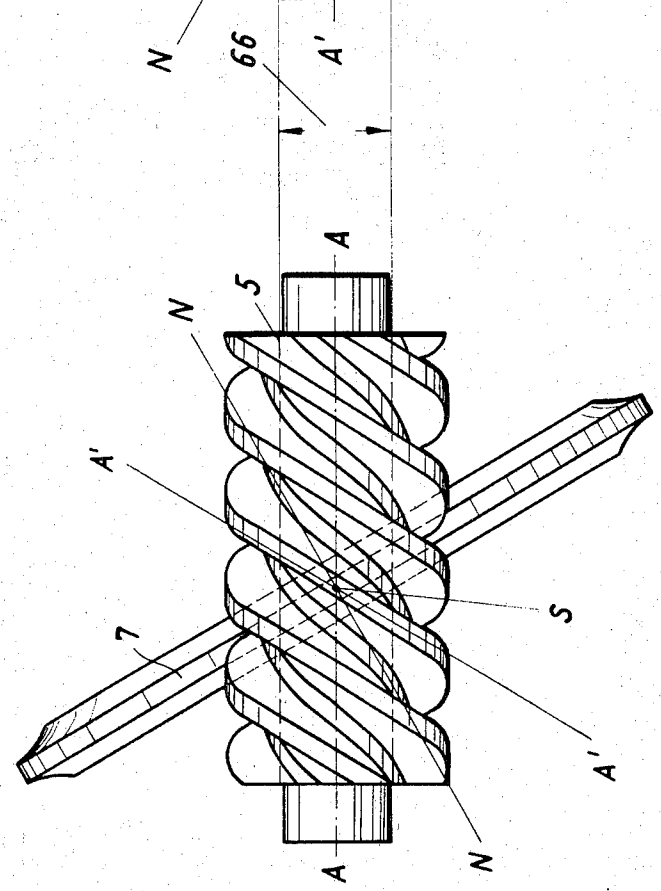

Fig. 6

Inventor:
GERHARD STADE

BY McGlew and Toren
ATTORNEYS

United States Patent Office

3,553,893

Patented Jan. 12, 1971

1

3,553,893

METHOD AND APPARATUS FOR DRESSING GRINDING WHEELS

Gerhard Stade, Berlin, Germany, assignor to Herbert Lindner GmbH, Berlin, Germany

Filed Jan. 16, 1969, Ser. No. 791,622
Claims priority, application Germany, Feb. 28, 1968, 1,652,105
Int. Cl. B24b 7/00
U.S. Cl. 51—5 11 Claims

ABSTRACT OF THE DISCLOSURE

In a method for dressing grinding wheels of thread grinding machines, for forming involute worms with accurate blank profiles, and wherein the dressing movements take place along generatrices which are tangent to the circular base cylinder of the involute worm, dressing of the grinding wheel is effected while the grinding wheel is forming an involute worm. The dressing is effected along generatrices intersecting the grinding wheel at points diametrically opposite the points of intersection, with the grinding wheel, of generatrices of the involute worm. The dressing movements are effected in a plane which intersects the rotation and swivelling axes of the grinding wheel at a line of intersection with the axial plane of the involute worm, and which is mirror symmetrical with such axial plane with respect to the axis of rotation of the grinding wheel.

BACKGROUND OF THE INVENTION

In the dressing of grinding wheels for grinding involute worms, a distinction is made between dressing which is grinding wheel oriented and dressing which is workpiece oriented. Conventional dressing procedures are grinding wheel oriented. By this, it is understood a dressing operation wherein the grinding wheels are dressed to the normal section of the worm.

In this case, the engaging flank of the grinding wheel, dressed to the normal section of the worm, is an annular part of a conical surface. In order to obtain the hollowness of the grinding wheel flanks, as required for accurate grinding of involute worms, the diamond dresser must be template controlled. The required template is however, a function of the diameter of the grinding wheel. It follows, from this, that, a decrease of the grinding wheel diameter, through wear of the grinding wheel, the template curve changes. Such a dressing tool necessitates frequent changing of the template as a function of the particular grinding wheel diameter, and thus requires a large number of templates and considerable expenditure of time for changing the templates.

To avoid these disadvantages, it is also possible to use a workpiece oriented dressing procedure. By "workpiece oriented" dressing is understood a dressing procedure wherein the involute worm to be ground is replaced by the dressing tool, so that the axis of the work and that of the dressing tool coincide in that, instead of the involute worm, the dressing tool is mounted between the tips of the workpiece spindle case and the tailstock. In dressing operations which are workpiece oriented, the grinding wheel is fed aginst the dresser at right angles to the axis of the dresser. In this case, the grinding wheel is dressed in a straight-lined manner along the generatrix which is tangent to the circular base cylinder of the involute worm and passes through the point of intersection of the thread line on the circular base cylinder with the axial sectional plane of the worm.

The resulting hollow grinding wheel flank grinds an involute worm with a high degree of accuracy. The hollow-

2

ness of the flank increases with a reduced grinding wheel diameter, such as when the grinding wheel diameter is reduced through wear. In the grinding of the involute worm, this results in maintaining the profile form irrespective of the particular diameter of the grinding wheel at a given moment.

Grinding wheel dressing oriented to the workpiece has the advantage that, after each dressing, the correct flank profile necessarily has been ground without it being necessary to take into consideration the particular size or diameter of the grinding wheel at a given moment. Cumbersome making and exchanging of templates is thus obviated. Workpiece oriented dressing has, however, the disadvantage that the dresser or dressing tool has to be exchanged for the workpiece which, with heavy worms and heavy dressers, presents certain difficulties. Additionally, it is not possible to incorporate the dressing process in an automatic grinding cycle. For these reasons, template controlled grinding wheel oriented dressing has heretofore been preferred in most cases over workpiece oriented dressing.

SUMMARY OF THE INVENTION

This invention relates to the dressing of grinding wheels on thread grinding machines for making involute worms with accurate flank profiles, and, more particularly, to an improved method and apparatus of carrying out such dressing substantially automatically, in a workpiece oriented manner, and while the workpiece is being ground. A feature of the invention is that, in workpiece oriented dressing of the grinding wheel, the workpiece need no longer be exchanged for the dresser or dressing tool, and vice versa.

In accorrdance with the invention method, the dressing motions are effected relative to a plane which intersects the swivel axis of the grinding wheel and the dresser axis, and which plane is mirror symmetrical with respect to the normal section which intersects the swivel axis of the grinding wheel and the rotation axis of the grinding wheel, with the axial plane which intersects the swivel axis of the grinding wheel and the axis of the involute worm.

In addition, and while the grinding wheel is forming an involute worm, the grinding wheel is dressed along generatrices intersecting the grinding wheel at points diametrically opposite the points of intersection, with the grinding wheel, of generatrices of the involute worm. The advantage of the invention method is that the axis of the dresser can be shifted into the space rearwardly of the grinding wheel, while maintaining the involute worm between the spindles of the grinding wheel, the axis of the dresser being diametrically opposite the axis of the involute worm being ground. This results in an additional advantage in that the workpiece need no longer be exchanged for the dresser, and vice versa, and further that a template control of the dresser, as hitherto necessary with the conventional grinding wheel oriented dressing, is obviated. With the invention method, the dressing motion, without requiring the exchange of the dresser for the worm, can be connected in the automatic cycle of the machine, and at any given moment. In the same manner as with workpiece oriented dressing, the invention obtains, in addition to the formation of an exact flank profile, necessarily also the advantage that, during the dressing of the grinding wheel, the amount of dressing is compensated.

In order to arrive at the solution of the problem solved by the invention, it was necessary to recognize that, by virtue of the symmetry of the grinding wheel, a workpiece oriented dressing of the grinding wheel was possible rearwardly of the grinding wheel if the grinding wheel is dressed along a second generatrix which is arranged sym-

metrically, relative to the normal section, with respect to the generatrix being ground on the workpiece. The grinding wheel is then dressed exactly so that it grinds, in the area in front of the grinding wheel, the desired involute worm flanks.

The invention is also directed to apparatus for performing the method. In accordance with the apparatus of the invention, the axis of the dresser or dressing tool extends parallel to the axis of the involute worm, but is behind the grinding wheel while the involute worm remains mounted in front of the grinding wheel. The worm axis, the swivel axis of the grinding wheel and the dresser axis lie in one common plane which is the axial sectional plane of the involute worm. The distance from the dresser axis to the center of the swivel axis of the grinding wheel, when the desired grinding depth is attained, is equal to the distance of the worm axis from the center of the swivel axis of the grinding wheel. In accordance with the invention, these two conditions are fulfilled by the make-up of the thread grinding machine, on the one hand, and by the in-feed gearing of the dresser of the machine, on the other hand.

To this end, the grinding wheel slide, in the space behind the grinding wheel, carries a dresser slide on which there is pivoted, for movement about the dresser axis, a bearing block for spaced dresser supports. These dresser supports are adjustable to the generatrices of the two flanks of the involute worm, and are positionable in their dressing positions by limit switch means actuated in these positions.

A solid end stop is included in the train of the in-feed gearing, and is associated with a quick motion stroke piston whose in-feed end position is limited by the solid stop. When the grinding wheel side engages this end stop, the second condition, that the distance of the dresser axis from the center of the swivel axis of the grinding wheel be equal to the distance of the workpiece axis from the center of the swivel axis of the grinding wheel, is completely fulfilled.

In accordance with a preferred form of the apparatus, the in-feed spindle, which is fixedly joined with the quick motion stroke pistons, carries cam disks for actuating further limit switches which control the quick-motion stroke movement of the in-feed spindle. Such a quick-motion stroke movement is required when a dresser for one flank has to be moved back rapidly from its operating position so as to bring the dresser for the other flank into operative position. By virtue of the provision of the limit switches for the quick-motion stroke, it is possible also to incorporate these movements in the automatic cycle of the machine.

An object of the invention is to provide a novel method and novel apparatus for workpiece oriented dressing of grinding wheels of thread grinding machines for forming involute worms with accurate flank profiles.

Another object of the invention is to provide such a method and apparatus for procedures wherein the dressing movements take place along generatrices which are tangent to the circular base cylinder of an involute worm.

A further object of the invention is to provide such a method and apparatus in which it is not necessary to exchange the workpiece for the grinding wheel during dressing of the grinding wheel.

Still another object of the invention is to provide such a method and apparatus in which dressing of the grinding wheel takes place during grinding of an involute worm.

A further object of the invention is to provide such a method and apparatus in which, while the grinding wheel is forming an involute worm, the grinding wheel is dressed along generatrices intersecting the grinding wheel at points diametrically opposite the points of intersection, with the grinding wheel, of generatrices of the ivolute worm.

Anoher object of the invention is to provide such a method and apparatus in which dressing movements are effected relative to a plane which intersects the swivel axis of the grinding wheel and the dresser axis, and which plane is mirror symmetrical, with respect to the normal section which intersects the swivel axis of the grinding wheel and the rotation axis of the grinding wheel, with the axial plane which intersects the swivel axis of the grinding wheel and the axis of the involute worm.

A further object of the invention is to provide such a method and apparatus in which, without the necessity of exchanging a dresser for the worm, the dressing motion can be included in the automatic cycle of the grinding machine at any given time.

For an understanding of the principles of the invention, reference is made to the following description of a typical embodiment thereof as illustrated in the accompanying drawings.

BRIEF DESCRIPTION OF THE DRAWINGS

In the drawings:

FIG. 1 is a general and partial elevation view of a thread grinding machine embodying the invention;

FIG. 2 is a vertical sectional view of the grinding machine, taken on the line II–II of FIG. 1 and illustrating the in-feed gearing and the dresser;

FIG. 3 is a top plan view of the dresser, looking in the direction of arrow III of FIG. 2;

FIG. 4 is a front view of the head of the dresser shown in FIG. 3, on enlarged scale and as seen in the direction of the arrow IV of FIG. 3;

FIG. 5 is a side elevation view, corresponding to FIG. 4, as seen in the direction of the arrow V of FIG. 4; and

FIGS. 6 and 7 are schematic views illustrating the involute worm and the grinding wheel, provided for the purpose of explaining the manner of operation.

DESCRIPTION OF THE PREFERRED EMBODIMENT

Referring to FIG. 1, which shows the thread grinding machne in its basic form, the thread grinding machine has a bed **1** carrying a workpiece slide **2** on which are mounted the workpiece spindle case **3** and the tailstock **4**. The workpiece **5** of FIG. 1 represents an involute worm, and it is mounted between spindles **6** which lie in an axial plane A—A of involute worm **5**. Grinding wheel **7** is located behind involute worm **5**, and is swivelled into the angle of inclination of the thread of the involute worm. For this purpose, there is a swivel support **8** in which is mounted, for swivelling movement of the grinding wheel, the spindle carrier **9** of the grinding wheel, spindle carrier **9** carrying drive motor **10** for grinding wheel spindle **11**. Workpiece spindle **12** is driven by a motor **13**.

Referring to FIG. 2, the in-feed gearing illustrates the position of the grinding wheel dresser generally denoted at **14**. Grinding wheel **7** is shown in its angular position corresponding to FIG. 1. Involute worm **5**, to be ground, is mounted between spindles **6** forwardly of grinding wheel **7**, and grinding wheel dresser **14** is mounted behind grinding wheel **7**. Swivel support **8** is integral with grinding wheel slide **15**.

The in-feed movement of grinding wheel slide **15** is effected by the in-feed gearing generally indicated at **16**, and this gearing includes an in-feed spindle **17** threaded through a spindle nut **18** fixedly mounted on grinding wheel slide **15**. The in-feed movement is produced by means which are known per se. These include in-feed cylinder **19** and in-feed piston **20**, which latter is fixedly connceted with in-feed spindle **17**. Piston **20** has a stop or abutment **21** which co-acts with a counterstop **22** of a screw **23** connected with a shaft **24** carrying two ratchet wheels **25** and **26**. The ratchet mechanisms are indicated at **27** and **28** and, in this case, are hydraulic, each including a cylinder and a piston. A scale **29** is provided on shaft **24**, and in-feed cylinder **19** is under hydralic pressure through line **30**.

The in-feed movement results from a movement of piston **20** from the position shown in dotted lines into the position shown in solid lines in FIG. 2, and further by means of ratchet mechanism **27** until piston **20** engages fixed stop **31**. This stop determines the depth to be ground or involute worm **5**. Ratchet mechanism **28** serves for the return movement.

A second gear train is connected to in-feed spindle **17** and includes a gear **32** fixed on spindle **17** and engaging an axially wider gear **33** fixed on a shaft **34** to which is also fixed a gear **35**. Shaft **34** may be operated by a hand wheel **36**, or by a ratchet switching mechanism **37**, through a gear **39**, fixed to shaft **38**, and driving an intermediate gear **40** meshing with gear **35**.

The righthand end of in-feed spindle **17**, as viewed in FIG. 2 is formed with a multi-splined profile **17***a* which is slidably and non-rotatably engaged in a gear **41** fixedly positioned axially on the grinding machine but rotatably mounted thereon. In addition, the right end of spindle **17** carries two trip cams **42** for operating limit switches **43**. Gear **41** meshes with an idler gear **44** which, in turn, meshes with a gear **45** which is rotatable on the grinding machine but is fixed against axial displacement thereon. Gear **45** is sildably and non-rotatably engaged with a multi-splined profile **46***a* at the end of dresser spindle **46**.

Grinding wheel slide **15** has a guideway **47** for dresser slide **48** which carries a nut **49** threadedly engaged with dresser spindle **46**. Dresser slide **48** carries the dresser **14** shown in top view in FIG. 3.

Dresser **14** is located at that side of grinding wheel **7** diametrically opposite involute worm **5**. Three diamonds **50** are provided for dressing grinding wheel **7**. The center diamond **50** is mounted in a stationary holder **51** in which it is adjustable by a micrometer screw. The two outer diamonds **50** are mounted on supports **52** which are of identical construction. These two outer of side diamonds serve for dressing the required convex flanks **7***a* and **7***b* of grinding wheel **7** (see FIGS. 6 and 7).

Referring to FIG. 2, dressing supports **52** include a hydraulic drive supplied from line **53**, and which hydraulic drive comprises a piston formed with a rack **54** engageable with a pinion **55**. Pinion **55**, in turn, meshes with the teeth of a rack on a push rod **56** of the diamond holder, for reciprocation of push rod **56** in the directions of the double arrow **57**.

Supports **52** are pivotal about dresser axis **58**, shown in FIGS. 2 and 3. The supports **52** are set symmetrically laterally of axial sectional plane A—A of involute worm **5**, as seen in FIG. 2, wherein the generatrix is indicated at **59'**. Generatrix **59'** extends oppositely and mirror symmetrical to generatrix **59** of worm **5** relative to the normal section N—N, the two generatrices extending to the same side of plane A—A and at the same angle thereto. The supports **52** are adjustable about pivot **60** in accordance with the base circle angle of inclination of grinding wheel **7**.

Supports **52** are arranged on swivel blocks **61** which are mounted in the bearing block **62** for swivelling about dresser axis **58**. Bearing block **62** slides in a guide **63** of dresser slide **48** and, through a hydraulic piston rod **64** of an otherwise not illustrated hydraulic drive, is moved into one or the other dresser position for the flanks **7***a* and **7***b* of grinding wheel **7**. This positioning is effected by a limit switch **75** operable by cams **76**. Fixed stops **77** serve for precise limitation.

The distance x_1 of dresser axis **58** from the center M of the swivel axis of grinding wheel **7** is equal to the distance x_2 of worm axis **65** from center M. The condition of $x_1=x_2$ is valid at every moment, and it is shown in FIG. 2 at the moment of the particular grinding depth desired. This condition is maintained by the compensation means between in-feed spindle **17** and dresser spindle **46**. Gears **41** and **45**, meshing with gear or pinion **44**, transmit the compensation movement, between grinding wheel slide **15** and dresser slide **48**, to dresser slide **48**. The dresser feed is effected by actuation of hand wheel **36**, or mechanically by the ratchet switching mechanism **37**.

As is known, the generatrices **59**, **59'** of an involute worm are tangent to its base circle, whose diameter, in FIGS. 6 and 7, is indicated at **66**. This base circle diameter is decisive for the correct setting of the dresser on the back of the grinding wheel so that the setting remains workpiece oriented. In order to carry out this setting on the diamond holder, the latter is adjustable, and the details with respect to such adjustment are shown in FIGS. 4 and 5.

The actual diamond holder is indicated at **67** and has guides **68** and **69** (FIG. 4). Guide **68** extends in the direction of the double arrow **57** of FIG. 3. Adjustment in this direction serves for orienting the diamond on the grinding wheel flank. The second guide **69** extends at right angles to guide **68**. Both guides **68** and **69** are disposed on carrier **70** which is fixedly connected with dresser push rod **56**, which latter is shown in FIG. 2. At the end of guide **69**, carrier **70** has a fixed stop **71**. A block **72** is engaged in guide **69** and is fixed with respect to swivel block **61**. Block **72** carries a stop **73** which is thus fixed in comparison to the movable push rod **56**. Carrier **70**, having the fixed stop **71**, is adjustable relative to stop **73**, and base circle **66** is decisive for this adjustment. The sitting value, between stops **71** and **73** is the radius of base circle **66**. This adjustment, with respect to the radius, is effected by a gauge **74** which is positioned for engagement by stops **71** and **73**, as best seen in FIG. 4. With the described means, the generatrix **59'** (FIG. 2) is set to extend oppositely and mirror symmetrical, with respect to the normal section N—N, to the generatrix **59**, on the workpiece side and at the same angle to the plane A—A.

Referring to FIGS. 6 and 7, FIG. 6 is a front elevational view of the workpiece with the grinding wheel in the rear, and FIG. 7 is a rear elevation view corresponding to FIG. 6 with the dressing arrangement being omitted. Grinding wheel **7** is shown swiveled into the angle of inclination of the involute worm **5**, as shown in FIG. 1. Axial plane A—A of worm **5** is the reference plane for "workpiece oriented" dressing in which, for dressing the grinding wheel, the workpiece is replaced by the dressing tool. The normal section N—N is a plane including the swivel axis S and the axis of rotation of the grinding wheel, and is perpendicular to the side faces of the grinding wheel. Plane A'—A' is a plane related to the grinding wheel and which, in FIG. 6, is mirror image symmetrical, relative to normal section N—N, with axial plane A—A, plane A'—A' including swivel axis S of the grinding wheel. Plane A'—A' is the plane of reference when the grinding wheel is dressed "workpiece oriented" on the rear side relative to the workpiece.

Due to the symmetry of the grinding wheel, plane A'—A' of FIG. 6, when grinding wheel **7** is turned 180° to the rear, moves into the horizontal position shown in FIG. 7, and plane A—A of FIG. 6 is still in a mirror image symmetrical relation to plane A'—A', considered relative to normal section N—N. Plane A'—A' becomes the axial plane and the plane of reference for the workpiece oriented dressing of the grinding wheel in the space behind the latter.

What is claimed is:

1. In a method for dressing grinding wheels of thread grinding machines for forming involute worms with accurate flank profiles, wherein the dressing movements take place along generatrices which are tangent to the circular base cylinder of the involute worm: the improvement comprising, while the grinding wheel is forming an involute worm, dressing the grinding wheel along generatrices intersecting the grinding wheel at points diametrically opposite the points of intersection, with the grinding wheel, of generatrices of the involute worm.

2. In a method for dressing grinding wheels, the improvement claimed in claim **1**, including effecting the dressing movements relative to a plane which intersects

the swivel axis of the grinding wheel and the dresser axis, and which plane is mirror symmetrical, with respect to the normal section which intersects the swivel axis of the grinding wheel and the rotation axis of the grinding wheel, with the axial plane which intersects the swivel axis of the grinding wheel and the axis of the involute worm.

3. In a method for dressing grinding wheels, the improvement claimed in claim **2**, in which the dressing movements are effected in a dressing plane which is pivotal about a dressing axis extending parallel to the axis of the involute worm, the axis of the involute worm, the swivelling axis of the grinding wheel and such dresser axis lying in a common plane.

4. In a method for dressing grinding wheels, the improvement claimed in claim **3**, in which the distance of the dresser axis from the midpoint of the swivelling axis of the grinding wheel, upon attainment of the desired grinding depth, being equal to the distance of the axis of the involute worm from such midpoint of the swivelling axis of the grinding wheel.

5. In a thread grinding machine for forming involute worms with accurate flank profiles, and including a bed, a pair of coaxial axially spaced rotating supports for mounting an involute worm to be ground, a grinding wheel slide mounted on the bed for movement toward and away from the axis of the supports, a grinding wheel rotatably mounted on said slide for rotation about a rotation axis and for angular adjustment about a swivelling axis intersecting the rotation axis, to adjust the angle of inclination of the grinding wheel relative to an involute worm mounted in the supports, and an in-feed gearing train on the bed operable to adjust the grinding wheel slide relative to the supports: the improvement comprising, in combination, a grinding wheel dresser on that side of the grinding wheel periphery opposite to the side of the grinding wheel periphery facing an involute worm mounted in said supports; said dresser being angularly adjustable about an axis which is parallel to the axis of said supports; whereby the involute worm to be ground remains mounted in said supports while the grinding wheel is dressed by said dresser; and means supporting said dresser on said grinding wheel slide.

6. In a thread grinding machine, the improvement calimed in claim **5**, in which the axis of said supports, the swivelling axis of said grinding wheel and the dresser axis lie in a plane which is an axial plane of an involute worm mounted in said supports.

7. In a thread grinding machine, the improvement claimed in claim **6**, in which the distance of the dresser axis from the midpoint of the swivel axis of said grinding wheel, when the desired grinding depth has been attained, is equal to the distance of the midpoint of said swivelling axis from the axis of an involute worm mounted in said supports.

8. In a thread grinding machine, the improvement claimed in claim **5**, including a dresser slide movably mounted on said grinding wheel slide on that side of said grinding wheel opposite to the side of said grinding wheel

engageable with an involute worm mounted in said supports; a bearing block movably mounted on said dresser slide for movement in a direction transversely of the direction of movement of said grinding wheel slide and said dresser slide; a pair of dresser supports mounted on said bearing block in spaced relation therealong for pivotal movement about said dresser axis; said dresser supports being adjustably mounted on said bearing block for adjustment of the dressers to the generatrices of the two flanks of said grinding wheel, each dresser support being associated with a respective one of said flanks; positioning means operatively associated with said dresser slide and said bearing block for moving said bearing block relative to said dresser slide selectively to move either one of said dresser supports into operative relation with the associated flank of said grinding wheel; and limit switch means operable by said bearing block to interrupt operation of said positioning means when the selected dresser support is in operative relation with the associated flank of said grinding wheel.

9. In a thread grinding machine, the improvement claimed in claim **5**, in which said in-feed gearing train includes a quick motion piston reciprocable in a cylinder to effect a limited quick feed of said grinding wheel slide; and a fixed stop engageable with said piston to limit the in-feed position of said piston.

10. In a thread grinding machine, the improvement claimed in claim **9**, in which said in-feed gearing train includes a rotatable threaded spindle threadably engaged through a nut fixed to said grinding wheel slide and fixedly secured at one end to said piston; cams fixed in spaced relation to said spindle; and limit switch operable by said cams and controlling the stroke of said piston and said spindle.

11. In a thread grinding machine, the improvement claimed in claim **7**, including a dresser slide movably mounted on said grinding wheel slide on the side of said grinding wheel opposite to that side of said grinding wheel engaged with an involute worm mounted in said supports; said in-feed gearing train adjusting said dresser slide relative to said grinding wheel slide; and compensation means included in said in-feed gearing train and operable constantly to maintain the spacing of said dresser axis from the midpoint of the swivel axis of said grinding wheel equal to the spacing of said midpoint of the swivel axis of said grinding wheel from the axis of an involute worm mounted in said supports.

References Cited

UNITED STATES PATENTS

1,880,612	10/1932	Voignier	125—11
2,699,018	1/1955	Carman	51—5
3,110,132	11/1963	Bassoff	125—11

WILLIAM R. ARMSTRONG, Primary Examiner

U.S. Cl. X.R.

51—287; 125—11