R. WEISBACH.

NON-REFILLABLE BOTTLE.

APPLICATION FILED DEC. 22, 1913.

1,126,172.

Patented Jan. 26, 1915.

Fig. 1.

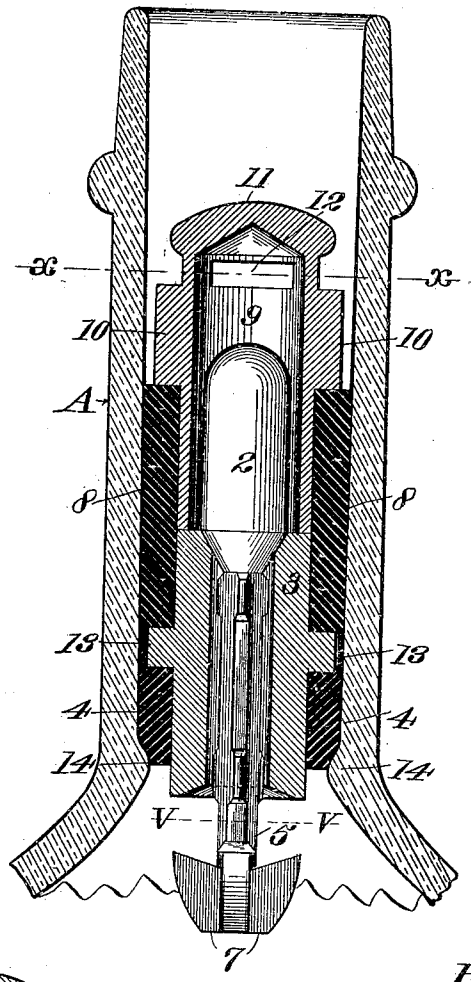

Fig. 2.

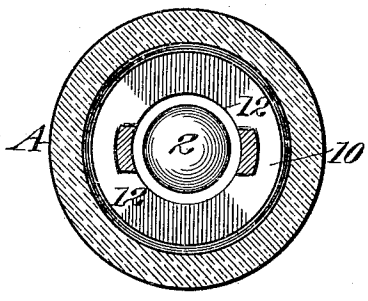

Fig. 3.

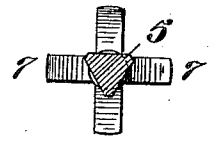

WITNESSES:

Charles Pickles

Thos. Eastberg.

INVENTOR

Rudolph Weisbach.

BY G. H. Strong

ATTORNEY

THE NORRIS PETERS CO., PHOTO-LITHO., WASHINGTON, D. C.

UNITED STATES PATENT OFFICE.

RUDOLPH WEISBACH, OF SAN FRANCISCO, CALIFORNIA.

NON-REFILLABLE BOTTLE.

1,126,172. Specification of Letters Patent. Patented Jan. 26, 1915.

Application filed December 22, 1913. Serial No. 808,114.

To all whom it may concern:

Be it known that I, RUDOLPH WEISBACH, a citizen of the United States, residing in the city and county of San Francisco and State of California, have invented new and useful Improvements in Non-Refillable Bottles, of which the following is a specification.

This invention relates to a non-refillable bottle.

The object of the present invention is to provide a non-refillable bottle in which the neck of the bottle is constructed in the usual shape and size, and which is adapted to receive and retain a non-refilling device, having a weighted valve and guards to protect same from being tampered with.

Other objects will hereinafter appear.

The invention consists of the parts and the construction and combination of parts as hereinafter more fully described and claimed, having reference to the accompanying drawings, in which—

Figure 1 is a longitudinal section through the neck of the bottle, showing the application of the non-refilling device. Fig. 2 is a cross section on the line X—X, Fig. 1. Fig. 3 is a cross section of the valve stem on line V—V, Fig. 1.

Referring to the drawings, A indicates the neck of a bottle constructed in the usual size and shape.

2 indicates a weighted valve, here shown as being adapted to seat on a tube 3 secured in a resilient packing member 4 by cement or like material. Suitably secured to the lower side of the valve member 2 is a stem 5, which projects down through the tube a suitable distance below same, and suitably secured upon the end of said stem is a plurality of radially disposed, upwardly turned arms 7 which are provided as stops to limit the opening or movement of the valve 2 with relation to its seat. Cemented or otherwise secured in a resilient packing member 8 is a second tube 9, the inside diameter of which is sufficient to permit a free movement of the valve within same and also a flow of liquid around the valve. The upper end of the tube 9 is slightly enlarged, as at 10, to form a shoulder for the resilient packing ring, and is also provided with a cap 11 formed integral with the shoulder on tube 9. The cap is, however, sufficiently elevated to permit the formation of one or more openings 12 through which the liquid may discharge. The resilient packing members 4 and 8 are entirely separated, as indicated at 13, and may be constructed of any suitable material, such as cork and the like.

The operation and application of the non-refilling device will be as follows: After the bottle has once been filled, it is only necessary to apply a suitable form of cement to the exterior surface of the packing member 4. This is then inserted in the neck of the bottle and forced down into the position indicated in Fig. 1 where it is preferably stopped from further movement by increasing the taper of the neck at this point or by providing the shoulder 14 shown. The second resilient packing member 8, containing the tube 9 with the cap 11, is similarly coated with cement on the exterior surface and is then forced into the position indicated in Fig. 1 on top of the member previously inserted. The bottle may then be corked in the usual manner and preserved.

When it is desired to empty the bottle, it is only necessary to remove the stopper (not here shown). The bottle is then tilted beyond a horizontal position, or practically speaking, upside down. This permits the valve to become unseated and will thus allow the liquid to escape through the interior of tube 3, past valve 2, and finally escape through the openings 12 below cap 11. The radial stop arms 7 limit the movement of the valve and will thus, to a certain extent, control the volume of fluid escaping from the bottle. It can also be seen that the valve will immediately seat itself when the bottle is placed a little beyond the horizontal position, as the weighted valve is sufficiently heavy to seat itself. It will, therefore, be impossible to refill the bottle, as it is necessary to tilt the bottle beyond a horizontal position before the valve becomes unseated.

The seat portion of the valve 2 is preferably spherical in form, as indicated at 14, and the top of the tube 3 is similarly shaped. This permits a perfect seating of the valve at all times in practically any position.

The non-refilling device constructed as here shown may be applied to any standard size of bottle and also to bottles having necks of various interior diameters as the resilient packing members 4 and 8 will naturally expand or contract to any unevenness in the neck of the bottle. The device when once applied will thus prevent any leakage around same and cannot be removed with-

out breaking the bottle, as the device is thoroughly cemented therein when applied.

The materials and finish of the several parts of the device are such as the judgment and experience of the manufacturer may dictate.

I wish it understood that various changes in form, proportions, and minor details of construction may be resorted to within the scope of the appended claim and that I do not wish to limit myself to the specific construction here shown.

Having thus described my invention, what I claim and desire to secure by Letters Patent is—

In a non-refillable bottle having an abutment at the base of the bottle neck, a lower tubular member having the inner circumference of its upper end beveled to form a valve seat, an upper tubular member having an outlet and having an interior diameter greater than the greatest diameter of the valve seat and having its lower end edge seated on the upper end edge of the lower member in surrounding relation to said valve seat, a valve in the seat, means extending through the lower member and engaged therewith to restrict the opening-movement of the valve, a peripheral projection on the upper end of the upper member, a peripheral projection on the lower member between the ends of the latter, packing engaged with the abutment and the under face of the second named projection, and packing engaged with the first named projection and the upper face of the second named projection, and extending across the abutting ends of the members and throughout approximately one half of the length of each of said members and being engaged with each whereby said second packing acts to connect the two members and is held by the projections against longitudinal movement in either direction.

In testimony whereof I have hereunto set my hand in the presence of two subscribing witnesses.

RUDOLPH WEISBACH.

Witnesses:
JOHN H. HERRING,
JULIUS CALMANN.

Copies of this patent may be obtained for five cents each, by addressing the "Commissioner of Patents, Washington, D. C."