United States Patent [19]

Riggs

[11] **3,765,434**

[45] **Oct. 16, 1973**

[54] **UMBRELLA WITH FOLDABLE STAFF**

[76] Inventor: **Royal W. Riggs,** 2406 Albert Lee, Sedalia, Mo. 65301

[22] Filed: **Jan. 5, 1972**

[21] Appl. No.: **215,494**

[52] **U.S. Cl.** ..... **135/20 A,** 135/16

[51] **Int. Cl.** **A45b 11/00**

[58] **Field of Search** ..... 135/16, 20 A, 20 M, 135/46 F; 248/226 A, 221, 231; 287/14, 96, 287/98, 99, 103, 104

[56] **References Cited**

UNITED STATES PATENTS

1,534,820	4/1925	Walmsley	135/46 F
1,678,361	7/1928	Shearon	287/99
3,521,651	7/1970	Pearlstine	135/46 F
2,694,538	11/1954	Consols et al.	248/226 A
1,787,566	1/1931	Brown	287/99
1,696,245	12/1928	Manly	287/99
3,246,867	4/1966	Ewing	248/226 A

Primary Examiner—Peter M. Caun
Attorney—John A. Hamilton

[57] **ABSTRACT**

An umbrella having a staff consisting of bottom, intermediate and top sections, the intermediate section being pivotally connected to the bottom section so as to extend either parallel to and coextensively with, or at right angles to the bottom section, and the top section being pivotally connected to the intermediate section so as to extend either coaxially therefrom or at right angles thereto, a standard foldable canopy mounted at the upper end of the top staff section and extending along the top and intermediate sections when folded, the canopy being operable by a slide movable along the top and intermediate staff sections, and mechanism operable by movement of the slide to secure the respective staff sections in desired relative positions.

4 Claims, 11 Drawing Figures

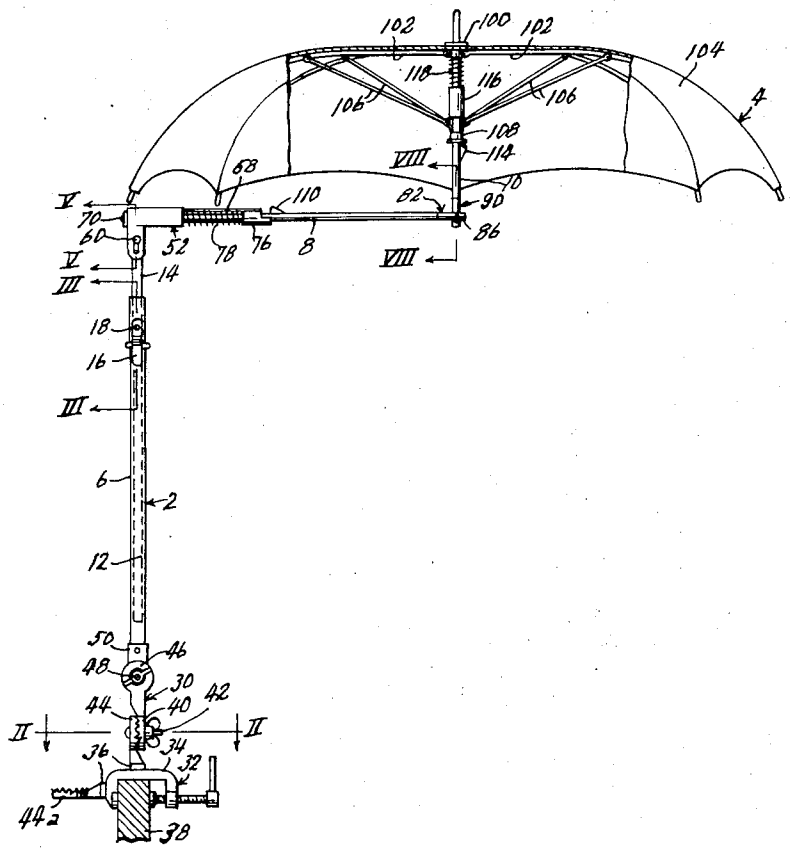

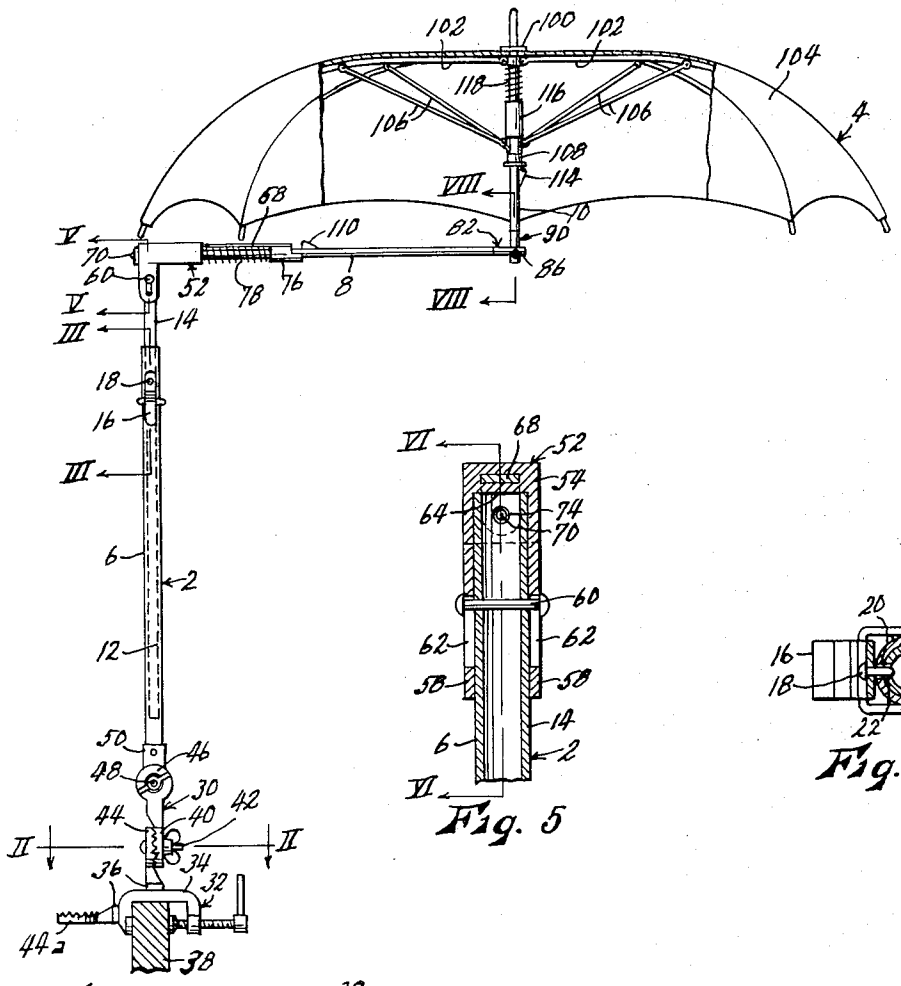

Fig. 1

Fig. 5

Fig. 4

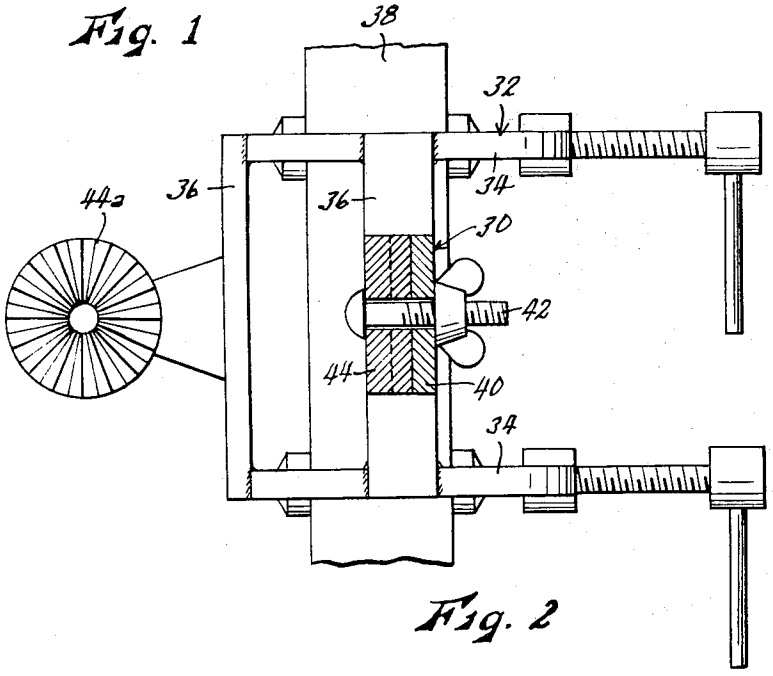

Fig. 2

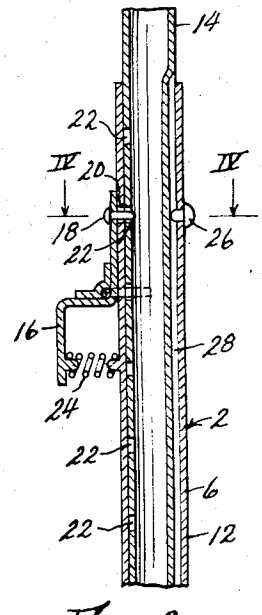

Fig. 3

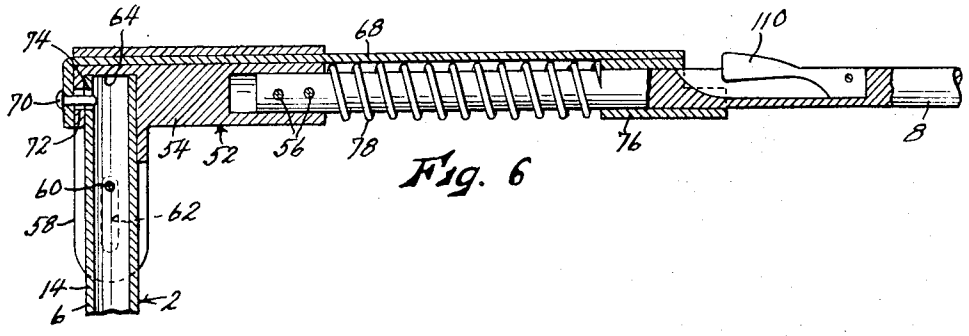

Fig. 6

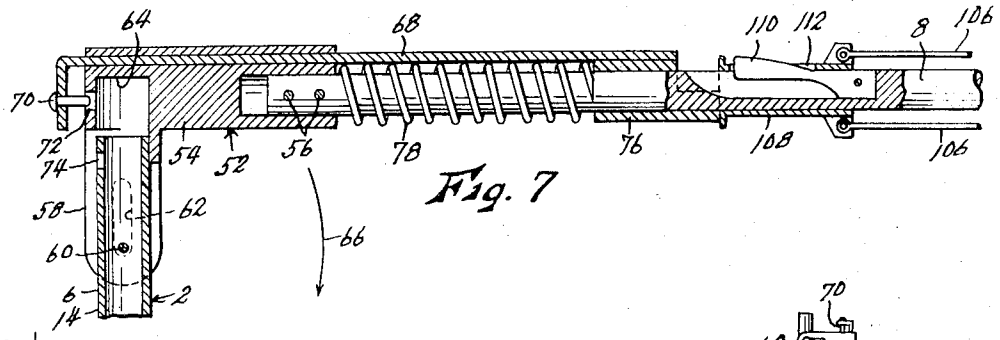

Fig. 7

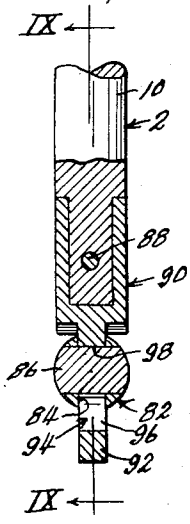

Fig. 8

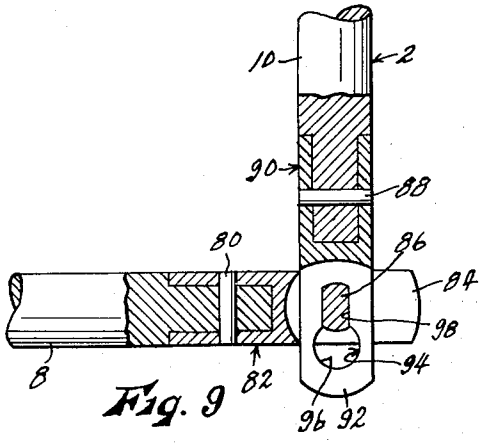

Fig. 9

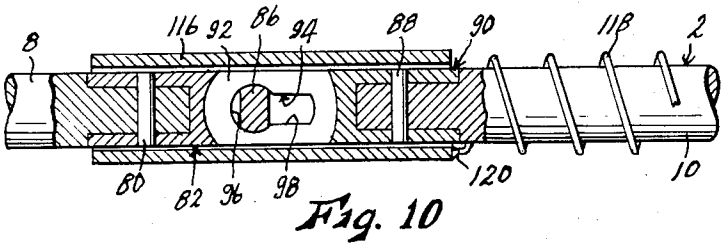

Fig. 10

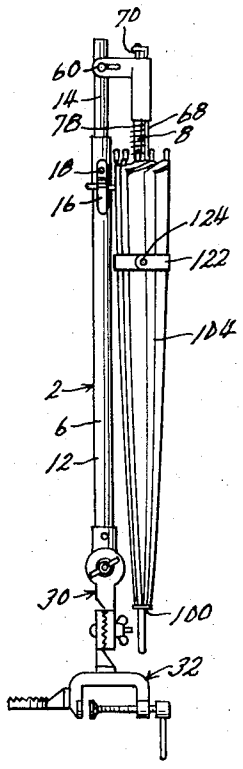

Fig. 11

UMBRELLA WITH FOLDABLE STAFF

This invention relates to new and useful improvements in foldable unbrellas, and has particular reference to umbrellas having horizontally offset staffs, that is, wherein the vertical axis of the canopy is horizontally offset from the lower end of the staff. Such umbrellas are commonly used when the lower end of the staff is adapted to be mounted on a rigid structure so that it does not need to be held by the user. For example, the staff may be secured to the side wall or gunwale of a boat, so that the offset of the staff positions the canopy over an occupant of the boat, or to the edge of a table, so that the offset of the staff centers the canopy over the table. There are of course many other uses for such umbrellas. Generally, such umbrellas include staffs having three sections, a generally vertical bottom section adapted to be mounted at its lower end on a fixed support, a generally horizontal intermediate section projecting from the upper end of said bottom section, and a generally vertical top section projecting upwardly from the extended end of said intermediate section, and carrying the canopy.

The primary object of the present invention is the provision of an umbrella of the general character described having novel means whereby it may be folded neatly and compactly for greater ease and convenience of storage, handling and transportation when not in actual use. To this end, the canopy is not only foldable in the usual manner of a hand-held umbrella, but also the staff sections, which in total must inherently be much longer than the staff of the usual hand-held umbrella, are pivotally related so as to be foldable into longitudinal co-extensive relation.

Another object is the provision of a foldable umbrella of the character described having novel means for securing or locking the various pivotally related staff sections both in their positions of usage, and in their folded positions.

A further object is the provision of a foldable umbrella of the character described wherein the canopy is extended and folded by means including a slide movable along the staff, in the manner of the usual hand-held umbrella, and wherein operation of certain of the locking means controlling relative pivotal movement of the various staff sections is automatically responsive to movement of said slide on said staff.

Other objects are simplicity and economy of construction, and efficiency and dependability of operation.

With these objects in view, as well as other objects which will appear in the course of the specification, reference will be had to the accompanying drawing, wherein:

FIG. 1 is a side elevational view, partially broken away, of a foldable umbrella embodying the present invention, shown fully extended and operatively mounted on a rigid support,

FIG. 2 is an enlarged, fragmentary sectional view taken on line II—II of FIG. 1,

FIG. 3 is an enlarged, fragmentary sectional view taken on line III—III of FIG. 1, with parts left in elevation,

FIG. 4 is a sectional view taken on line IV—IV of FIG. 3,

FIG. 5 is an enlarged, fragmentary sectional view taken on line V—V of FIG. 1,

FIG. 6 is a fragmentary sectional view taken on line VI—VI of FIG. 5,

FIG. 7 is a view similar to FIG. 6, but showing the connection between the bottom and intermediate staff sections released for pivotal movement,

FIG. 8 is an enlarged fragmentary sectional view taken on line VIII—VIII of FIG. 1,

FIG. 9 is a fragmentary sectional view taken on line IX—IX of FIG. 8,

FIG. 10 is a view similar to FIG. 9, but showing the intermediate and top staff sections secured in coaxial relation, and

FIG. 11 is a view similar to FIG. 1, but showing the umbrella fully folded for convenience of storage and handling.

Like reference numerals apply to similar parts throughout the several views, the umbrella staff being indicated generally by the numeral 2, and the canopy by the numeral 4. Staff 2 consists of bottom, intermediate, and top sections indicated respectively by numerals 6, 8, and 10. Bottom section 6 consists of a lower tube 12 and upper tube 14 telescoped slidably into said lower tube and projecting upwardly therefrom whereby the length of the bottom staff section 6 may be adjusted. Adjacent the top of lower tube 12, a latch lever 16 is pivoted thereto, and affixed in said lever is a latch pin 18 which, as best shown in FIGS. 3 and 4, normally projects inwardly through a hole 20 of tube 12 and selectively through one of a series of longitudinally spaced apart holes 22 of tube 14, whereby to lock said tubes against relative movement. Said lever is normally held in its operative position by a spring 24, but can be manually pivoted against said spring to withdraw latch pin 18 to permit adjustment of the length of staff section 6. A pin 26 fixed in tube 12 and engaged in a groove 28 formed longitudinally in tube 14 prevents relative rotation of said tubes.

The lower end of tube 12 of bottom staff section 6 is connected by a pivot fitting 30 to a clamp fixture 32 consisting of a pair of C-clamps 34 rigidly interconnected by bars 36. By means of said clamp fixture, the umbrella may be mounted on the side wall 38 of a boat hull or the like. Pivot fitting 30 has at its lower end a flat disc 40 with a radially grooved face, secured by a bolt 42 to a similar disc 44 fixed to one of bars 36. When said bolt is loosened, the discs may be relatively pivoted to change the inclination of staff section 6, but the connection is fixedly locked by the interengagement of the surface grooves of the discs when the bolt is tightened. Similarly, pivot fitting 30 has at its upper end a disc 46 secured by bolt 48 to a disc 50 fixed to tube 12 of the staff. Bolts 42 and 48 are at right angles to each other, so that as a result of the angling of the staff permitting by both, the staff is universally adjustable relative to clamp fixture 32. A disc 44*a* similar to disc 44, but at right angles to disc 44, is also affixed to one of the bars 36 of the clamp fixture, to which disc 40 can alternatively be affixed by bolt 42. Disc 44*a* is used when it is desired to attach clamp 32 to the edge of a horizontal member, such as a table edge, rather than to a vertical edge such as boat gunwale 38.

Bottom and intermediate staff sections 6 and 8 are connected by an angled bracket 52 best shown in FIGS. 5-7. It includes a straight leg 54 in the outer end of which one end of intermediate staff section 8 is affixed by pins 56, and a pair of parallel, spaced apart planar legs 58 extending at right angles from leg 54 and dis-

posed at opposite sides of the upper end portion of tube 14 of the bottom staff section. A pivot pin 60 is fixed transversely in said tube, said projects outwardly therefrom through longitudinally elongated slots 62 formed therefor in bracket legs 58, whereby the bracket may be pivoted relative to tube 14. By virtue of said slots, it will be seen that when bracket leg 54 is disposed precisely at right angles to tube 14, the bracket may be lowered relative to tube 14 to engage the upper end of said tube in a socket 64 formed in the bottom of bracket leg 54, as shown in FIG. 6, whereby to secure said bracket non-pivotally on tube 14. When the bracket is raised relative to tube 14, as shown in FIG. 7, bracket socket 64 is freed from tube 14, and the bracket may be pivoted relative to tube 14, in the direction indicated by arrow 66, whereby to dispose intermediate staff section 8 alongside and parallel to bottom section 6, as shown in FIG. 11.

Extending slidably through bracket leg 54, parallel to and just above staff section 8, is an elongated lock bar 68 which extends outwardly from both ends of bracket leg 54. At the end of said bracket leg distal from staff section 8, the extended portion of the lock bar is bent downwardly and has affixed therein a lock pin 70, also parallel to staff section 8. Said lock pin, as shown in FIG. 6, is adapted to extend through a hole 72 formed therefor in a wall of socket 64, and through a hole 74 of tube 14 which registers with hole 72 when said socket is engaged on said tube. When said pin is so engaged, it prevents accidental disengagement of said socket from said tube, and thus locks staff section 8 at right angles to staff section 6. When said pin is disengaged from hole 74, as shown in FIG. 7, bracket 52 may be raised to disengage socket 64 from tube 14 to permit pivotal movement of bracket 52 on pin 60. The end portion of lock bar 68 opposite from lock pin 70 extends parallel to and adjacent staff section 8, and is welded or otherwise affixed at its extreme end to sleeve 76 which is slidably mounted on said staff section. A compression spring 78 is coiled about staff section 8 between bracket 52 and sleeve 76, whereby to bias lock pin 70 yieldably toward its operative position.

The outer end of intermediate staff section 8 is affixed by pin 80 in an externally cylindrical ferrule 82, the outer end of which is bifurcated by a slot 84. A pin 86 is affixed in said ferrule and extends across slot 84. Said pin is of flattened cross-sectional contour with its major axis disposed transversely to staff section 8. The lower end of top staff section 10 is affixed by pin 88 in an externally cylindrical ferrule 90 the lower end of which forms a tongue 92 which projects into slot 84 of ferrule 82 and which has formed therein a keyhole aperture 94 engaged on pin 86. Said aperture has an enlarged circular portion 96, remote from staff section 10, which is of sufficiently large diameter to rotate freely on pin 86, and a narrower extension 98 projecting toward staff section 10 which engages slidably, but non-rotatably, over the minor dimension of pin 86. When so engaged, as shown in FIG. 9, staff section 10 is locked in right-angled relation to staff section 8. However, if staff section 10 is elevated to engage the circular portion 96 of aperture 94 on pin 86, staff sections 8 and 10 may be relatively pivoted to a coaxially aligned position, as shown in FIG. 10. When so aligned, staff sections 8 and 10, and ferrules 82 and 90 present a cylindrical form of uniform diameter.

Mounted at the upper end of top staff section 10 is a head member 100 to which the usual canopy ribs 102, carrying the flexible canopy 104 of fabric, plastic, or the like, are pivoted. Said ribs are movable between the extended use position of FIG. 1, to the folded position of FIG. 11, in which the canopy is gathered closely about the then coaxially aligned staff sections 8 and 10, by means of struts 106 each of which is pivoted at one end to one of ribs 102, and at its opposite end to a tubular slide 108 movable along the umbrella staff, all as common and well known in the umbrella art. However, in the present case it is desired that the space beneath canopy 104 be as unobstructed as possible for occupation by the user. For this reason, bottom staff section 6 is offset to one side, intermediate staff section 8 is disposed as closely as practical to the bottom of the raised canopy, and top staff section 10 is quite short, its length being little more than the axial depth of the bottom concavity of the canopy. Hence slide 108, in raising and lowering the canopy, must move not only along the top staff section, but also the intermediate section, and movement of said slide from one section to the other is permitted when said staff sections are coaxially aligned as described above.

As the canopy is folded as in FIG. 11, slide 108 depresses and passes over a spring detent 110 mounted in and projecting outwardly from staff section 8, said detent then snapping outwardly through a slot 112 of the sleeve to secure the canopy folded, as shown in FIG. 7. As the canopy is extended to the position shown in FIG. 1, sleeve 108 passes over and depresses a spring detent 114 similar in all respects to detent 110 but mounted in staff section 10, which then snaps outwardly beneath said sleeve to secure the canopy in its extended position. Detents 110 and 114 are also common and well known in the art.

As sleeve 108 approaches its FIG. 7 position in the folding of the canopy, it engages and moves lock sleeve 76 toward bracket 52, against the pressure of spring 70, thereby disengaging lock pin 70 as already described. When slide 108 is raised to its FIG. 1 position, it pushes ahead of it a tubular slide 116 which is slidably mounted on staff section 10, and which also depresses and passes over detent 114. Said slide is affixed at its upper end to a coil spring 118, as at 120 (see FIG. 10). Said spring is disposed about staff section 10 above said slide, and is similarly affixed at its upper end to head fixture 100. As slide 108 is moved upwardly, it simply pushes slide 116 ahead of itself, compressing spring 118. When slide 108 is moved downwardly to engage on staff section 8, slide 116 follows downwardly until spring 118 is completely relaxed, at which time slide 116 is disposed about ferrules 82 and 90, in bridging relation to pivot pin 86 of said ferrules, as shown in FIG. 10. This locks staff sections 8 and 10 against relative pivotal movement. The precise position of sleeve 116 is not particularly critical, and the selection of a spring 118 having a "relaxed" length sufficiently accurate to place the slide with adequate accuracy is a simple matter.

In operation, presuming that the umbrella is fully raised or extended as in FIG. 1, it is lowered or folded by first raising staff section 10 axially upwardly relative to section 8, sufficiently to engage the circular portion 96 of aperture 94 on pin 86. Staff sections 8 and 10 are then pivoted into axially aligned relation, and detent 114 is manually depressed to permit slides 108 and 116

to move downwardly thereover. Spring **118** is also of sufficiently large internal diameter to pass over said detent. Slide **108** passes freely over pivot ferrules **90** and **82** onto staff section **8**, while slide **116** is moved onto the ferrules in bridging relation to pivot pin **86**, and stops at that point as spring **118** becomes relaxed, as already described, thereby locking staff sections **8** and **10** against relative pivotal movement. This greatly facilitates further handling of the umbrella during the folding operation, since folding the canopy about a staff with freely pivoted sections is a cumbersome operation at very best. As the canopy is further folded, slide **108** continues its movement along staff section **8** until it is engaged and secured by detent **110**, as shown in FIG. **7**, thereby securing the canopy folded along staff sections **8** and **10**. As slide **108** approaches this position, it engages and moves slide **76** against the bias of spring **78** to disengage lock pin **70** of pivot bracket **52** from hole **74** of tube **14** of the bottom staff section. Bracket **52** may then be elevated to disengage bracket socket **64** from the upper end of said tube, and pivoted on pin **60** to dispose the folded canopy against bottom staff section **6**, as shown in FIG. **11**. The canopy may be gathered snugly about staff section **8** by a tie strip **122** secured by a snap fastener **124**, as is common in the umbrella art. Said tie strip could also encircle staff section **6** if desired. The umbrella is then very compact, for convenience of handling, storage, and transportation.

While I have shown and described a specific embodiment of my invention, it will be readily apparent that many minor changes of structure and operation could be made without departing from the spirit of the invention.

What I claim as new and desire to protect by Letters Patent is:

1. A foldable umbrella comprising:

a. a staff consisting of bottom, intermediate and top sections,

b. first pivot means interconnecting said bottom anc intermediate staff sections for pivotal movement between a closely spaced, parallel, coextensive relation and a right-angled relation,

c. releasable latch means operable to secure said first pivot means at a position with the associated staff sections in right-angled relation,

d. second pivot means interconnecting said intermediate and top staff sections for pivotal movement between an axially aligned relation and a right-angled relation, said second pivot means being lockable in a position with the associated staff sections in right-angled relation.

e. an umbrella canopy carried by said top staff section concentrically therewith and being foldable about said intermediate and top staff sections when said staff sections are disposed in axially aligned relation, said canopy being folded and extended by means including a slide movable along said intermediate and top staff sections, said slide traversing the pivotal connection of said staff sections at an intermediate position of its movement,

f. first locking means operable when engaged to lock said first pivot means with said bottom and intermediate staff sections in right-angled relation,

g. second locking means operable when engaged to lock said intermediate and top staff sections in axially aligned relation, said canopy slide

h. means being operable by movement thereof to respectively operatively engage and disengage said first and second locking means as said canopy slide is moved in a direction to extend said canopy, and to respectively operatively engage and disengage said second and first locking means as said canopy slide is moved in a direction to fold said canopy.

2. A foldable umbrella as recited in claim **4** wherein said first locking means comprises:

a. a locking pin operable when engaged to lock said first pivot means with said bottom and intermediate staff sections in right-angled relation,

b. a second slide movable on said intermediate staff section and operably connected to said locking pin, whereby said locking pin is engaged when said second slide is moved away from said first pivot means, and disengaged when said second slide is moved toward said first pivot means, and

c. a spring biasing said second slide away from said first pivot means along said intermediate staff section, said canopy slide being operable to engage and move said second slide toward said first pivot means as said canopy slide is moved to fold said canopy.

3. A foldable umbrella as recited in claim **2** wherein said second locking means comprises:

a. a sleeve mounted slidably on said top staff section above said canopy slide, and

b. a spring urging said sleeve downwardly along said top section to a position in which it bridges the pivotal connection between said top and intermediate staff sections to lock them against relative pivotal movement in coaxially aligned relation, said canopy slide being operable to engage and move said sleeve upwardly along said top staff section as said canopy slide is moved to extend said canopy.

4. A foldable umbrella as recited in claim **1** wherein said second locking means comprises:

a. a sleeve mounted slidably on said top staff section above said canopy slide, and

b. a spring urging said sleeve downwardly along said top section to a position in which it bridges the pivotal connection between said top and intermediate staff sections to lock them against relative pivotal movement in coaxially aligned relation, said canopy slide being operable to engage and move said sleeve upwardly along said top staff section as said canopy slide is moved to extend said canopy.

* * * * *